(12) INTERNATIONAL APPLICATION PUBLISHED UNDER THE PATENT COOPERATION TREATY (PCT)

(19) World Intellectual Property Organization
International Bureau

(43) International Publication Date
17 November 2005 (17.11.2005)

PCT

(10) International Publication Number
WO 2005/108221 A2

(51) International Patent Classification[7]: B65D 25/28

(21) International Application Number:
PCT/NL2005/000359

(22) International Filing Date: 11 May 2005 (11.05.2005)

(25) Filing Language: Dutch

(26) Publication Language: English

(30) Priority Data:

1026162	11 May 2004 (11.05.2004)	NL
1026353	8 June 2004 (08.06.2004)	NL
1026965	3 September 2004 (03.09.2004)	NL

(71) Applicants: **VAN DEN BOOOM, Marcus, Carolus, Adrianus** [NL/NL]; Abdijstraat 44, NL-5473 AG Heeswijk-Dinther (NL). **RIJPERT, Elisabeth, Petronella, Maria** [NL/NL]; Wieken 43, NL-5374 JT Schaijk (NL). **VERHEES, Godefridus, Josephus, Maria** [NL/NL]; Wevestraat 81, NL-5708 AE Helmond (NL).

(71) Applicant and
(72) Inventor: **CORNELISSEN, Rudolphus, Johannes, Adrianus, Maria** [NL/NL]; Wieken 43, NL-5374 JT Schaijk (NL).

(74) Agent: **VERHEES, Godefridus, Josephus, Maria**; Wevestraat 81, NL-5708 AE Helmond (NL).

(81) Designated States *(unless otherwise indicated, for every kind of national protection available)*: AE, AG, AL, AM, AT, AU, AZ, BA, BB, BG, BR, BW, BY, BZ, CA, CH, CN, CO, CR, CU, CZ, DE, DK, DM, DZ, EC, EE, EG, ES, FI, GB, GD, GE, GH, GM, HR, HU, ID, IL, IN, IS, JP, KE, KG, KM, KP, KR, KZ, LC, LK, LR, LS, LT, LU, LV, MA, MD, MG, MK, MN, MW, MX, MZ, NA, NG, NI, NO, NZ, OM, PG, PH, PL, PT, RO, RU, SC, SD, SE, SG, SK, SL, SM, SY, TJ, TM, TN, TR, TT, TZ, UA, UG, US, UZ, VC, VN, YU, ZA, ZM, ZW.

(84) Designated States *(unless otherwise indicated, for every kind of regional protection available)*: ARIPO (BW, GH, GM, KE, LS, MW, MZ, NA, SD, SL, SZ, TZ, UG, ZM,

[Continued on next page]

(54) Title: GRIPPING DEVICE FOR USE ON A PAINT RECEPTACLE, IN PARTICULAR A TIN OF PAINT

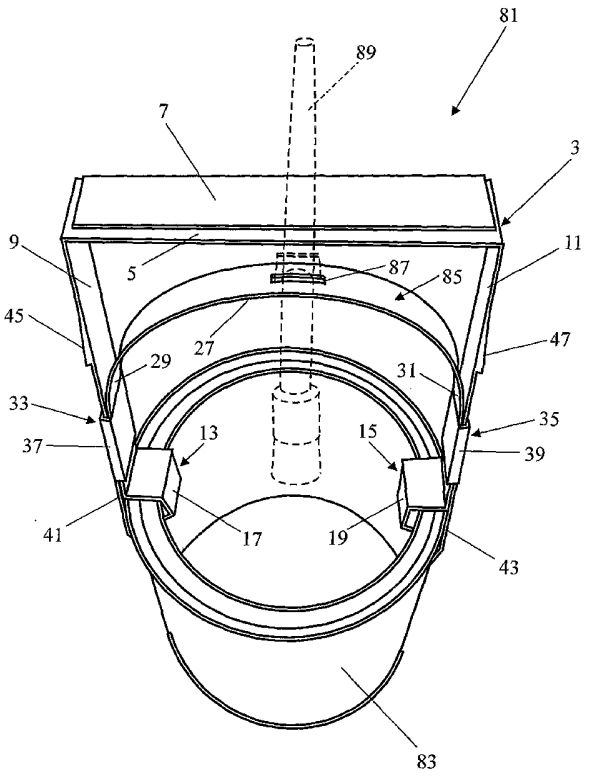

(57) Abstract: A gripping device (81) has a U-shaped grip (3) with a middle section (5) and two flexible arms (9, 11), the free outer ends (13, 15) of which are provided with hook-shaped parts (17, 19) which area means of coupling in order to couple to a paint tin. Within the grip (3) there is a U-shaped handle (25), the free outer ends (33, 35) of which are provided with sleeves (37, 39) that can slide along the arms (9, 11) of the grip (3). There are stops (45, 47) on the arms (9, 11) of the grip (3) which limit sliding of the free outer ends (33, 35) of the handle (25) in a direction towards the middle section (5) of the grip (3). By pulling the middle section (27) of the handle (25) towards the middle section (5) of the grip (3), the arms (9, 11) bend as a result of which the free outer ends (13, 15) of the arms come towards each other. Furthermore, the gripping device (1) has two locking elements (41, 43) that can slide along the grip, which are attached to the free outer ends (33, 35) of the handle (25) and which can be slid in front of the hooks of the hook-shaped parts (17, 19).

WO 2005/108221 A2

ZW), Eurasian (AM, AZ, BY, KG, KZ, MD, RU, TJ, TM), European (AT, BE, BG, CH, CY, CZ, DE, DK, EE, ES, FI, FR, GB, GR, HU, IE, IS, IT, LT, LU, MC, NL, PL, PT, RO, SE, SI, SK, TR), OAPI (BF, BJ, CF, CG, CI, CM, GA, GN, GQ, GW, ML, MR, NE, SN, TD, TG).

Published:

— *without international search report and to be republished upon receipt of that report*

For two-letter codes and other abbreviations, refer to the "Guidance Notes on Codes and Abbreviations" appearing at the beginning of each regular issue of the PCT Gazette.

Gripping device for use on a paint receptacle, in particular a tin of paint.

BACKGROUND OF THE INVENTION:

Field of the invention.

The invention relates to a gripping device for use on a paint receptacle, in particular a tin of paint, comprising a U-shaped grip with a middle section that functions as a handgrip and two arms that are connected to it, the free outer ends of which are provided with a means of coupling for coupling to a paint receptacle in such a way that it is detachable, where at least the free outer ends of the arms can move with respect to the middle section. By U-shaped is meant any shape having two arms and a middle section in between them, where each of the arms has a free outer end.

Prior art.

Such a gripping device is known from the American patent US 2.628.858. The coupling elements of this known gripping device are two hooks on the free outer ends of the grip, which can be hooked under the inward protruding rim of a tin of paint and two locking elements that can slide along the grip's arms which can be slid in front of the hooks' openings in order to close off the rim of the paint tin. The grip of the known gripping device is flexible as a result of which the free outer ends of the grip's arms can be bent towards each other in order to be able to get the hooks under the rim of a paint tin. The disadvantage of this known gripping device is that in order to fit it on a paint tin two hands are usually necessary to push the free outer ends of the grip's arms towards each other and in any case, it is difficult to fit the gripping device on a paint tin with one hand.

Summary of the invention.

An objective of the invention is to provide a gripping device of the type described in the preamble, that can be fitted on a paint receptacle more easily. To this end,

the gripping device is characterized in that it comprises a means of moving in order to move the free outer ends of the arms in a direction towards each other. Because of this, it is not necessary to grasp the free outer ends of the arms and push them towards each other, for which two hands are usually needed, but the free outer ends of the grip's arms can simply be brought towards each other with the help of the means of moving.

An embodiment of the handle according to the invention is characterized in that the means of moving is a U-shaped handle with a middle section and two legs that are connected to it, which handle is situated between the grip's arms, in which the handle's middle section is situated near the grip's middle section, and in which the free outer ends of the handle's legs are coupled to the grip's arms. The handle's middle section is here situated at a distance from the grip's middle section. By pulling the middle section of the handle towards the middle section of the grip, which can easily be done with one hand, the free outer ends of the grip's arms are pulled towards each other and the free outer ends can be brought into the opening of a tin of paint. In case the grip is made of a flexible elastic material, the grip will bend back because of its elasticity as soon as the handle is released, as a result of which the means of coupling will couple to the paint tin's rim. In case the grip is not flexible (for example, the arms are connected to the middle section by means of hinges) the middle section of the handle will have to be pushed back in order to bring the free outer ends of the grip's arms away from each other again.

A further embodiment of the handle according to the invention is characterized in that the free outer ends of the handle's legs are attached to the grip's arms.

Another embodiment of the handle according to the invention is characterized in that the free outer ends of the handle's legs can slide along the grip's arms, and the grip's arms are provided with stops that limit sliding of the free outer ends of the handle's legs in a direction towards the middle section of the grip.

The grip's arms can be connected to the middle section in such a way that they can hinge, however, it is preferable for the grip to be made from one piece and that the material is elastic. The handle's legs can also be connected to the middle section so that they can hinge, however, it is preferable for the handle to be made from one whole piece and from an elastic material.

Still a further embodiment of the handle according to the invention is characterized in that each free end of the grip's arms is provided with a hook-shaped part

that is a part of the means of coupling, in which the opening of the hook is turned outwards. Because of this, the hook-shaped part can be hooked under the paint tin's rim which projects inwards. By a hook-shaped part is meant each part that is provided with an opening in which a part of a paint receptacle's rim can be received.

In order to be able to fit the gripping device firmly on paint tins having rims of varying thicknesses, each free end of the grip's arms in addition to the hook-shaped part may be provided with an additional hook-shaped part of a different size than the hook-shaped part mentioned above.

Again a further embodiment of the handle according to the invention is characterized in that the gripping device, furthermore, comprises two locking elements which can be brought in front of the openings of the hook-shaped parts. Due to the locking elements it is possible to prevent the rim of the paint receptacle from unintentionally coming loose from the hook's opening and, therefore, from the gripping device as well. The locking elements are preferably two locking strips that can slide along the grip's arms.

In case the free outer ends of the handle's legs can slide along the grip's arms, the locking elements are preferably attached to the free outer ends of the handle's legs, so that by moving the handle both locking elements will slide.

Furthermore, the locking elements on the side turned toward the grip are preferably provided with an opening for receiving an outward projecting rim on the periphery at the top of the tin of paint when the gripping device is being fitted on a paint tin. Because of this, the locking elements are clicked into the locked position on the rim of the tin and more force is needed to pull the locking elements up into the unlocked position. The risk that here the locking elements will unintentionally slide into the unlocked position is greatly reduced because of this.

Brief description of the drawings.

The invention will be elucidated more fully below on the basis of drawings in which embodiments of the gripping device according to the invention are shown.

In these drawings:

Figure 1 shows a side-view of a first embodiment of the gripping device according to the invention with the handle in a first position;

Figure 2 shows a side-view of the gripping device with the handle in a second position;

Figure 3 shows a side-view of the gripping device with the free outer ends of the grip's arms pulled towards each other;

Figure 4 shows the gripping device fitted on a tin of paint;

Figure 5 shows a perspective view of a second embodiment of the gripping device provided with larger hooks;

Figure 6 shows a perspective view of a third embodiment of the gripping device provided with double hooks;

Figure 7 shows a perspective view of a fourth embodiment of the gripping device situated on a paint tin.

Detailed description of the drawings.

In figures 1, 2 and 3, a first embodiment of the gripping device according to the invention is shown in a side-view with the handle in different positions. The gripping device 1 has a U-shaped grip 3 made out of one piece of an elastic material, for example plastic, with a middle section 5 that is provided with a handgrip 7 and two flexible arms 9, 11. The free outer ends 13, 15 of the arms 9, 11 are made as hook-shaped parts 17, 19 with the openings 21, 23 turned outwards and which are a means of coupling for coupling to a paint tin in such a way that it is detachable.

Furthermore, the gripping device 1 has a means of moving with which the arms can be moved in a direction towards each other. This means of moving is made up of a U-shaped handle 25 with a middle section 27 and two legs 29, 31 which are connected to it. This handle 25 is situated between the arms of the grip 3, where the handle's middle section 27 is situated at a distance from, but is near the grip's middle section 5. The free outer ends 33, 35 of the handle's legs are provided with sleeves 37, 39 which are situated on the arms 9, 11 of the grip 3 and can be slid along those arms. There are strips situated on the free outer ends 33, 35 of the legs, which are locking elements 41, 43 and can be slid in front of the openings 21, 23 of the hook-shaped parts, see figure 1.

The arms 9, 11 of the grip 3 are provided with stops 45, 47 which limit sliding of the free outer ends 33, 35 of the handle's legs in a direction P towards the middle

section 5 of the grip, see figure 2. By pulling the middle section 27 of the handle 25 from this position towards the middle section 5 of the grip 3, the arms 9, 11 bend as a result of which the free outer ends 13, 15 of the arms come towards each other, see figure 3.

In figure 4, the gripping device 1 is shown once again but now on a paint tin 49. The hook-shaped parts 17, 19 are situated here about the rim 48 of a paint tin 49, which rim projects inwards, and the locking elements 41, 43 are situated on the exterior side of the paint tin 49 and close off the rim 48.

The locking elements 41, 43 on the side turned toward the grip 3 preferably are provided with an opening 42, 44 (see figures 1- 3 also) for receiving an outward projecting rim 48b on the periphery at the top of the tin of paint when the gripping device 1 fitted on the paint tin. Because of this, the locking elements are clicked in the locked position on the rim 48b of the tin and more force is needed to pull the locking elements up into the unlocked position.

In figure 5, a second embodiment of the gripping device 51 according to the invention is shown in perspective. All parts of this gripping device 51 that are the same as those in the drawings of the gripping device 1 shown in figures 1- 4, are indicated by the same reference number. This gripping device 51 is provided with hooks 53, 55 with a larger opening 57, 59 for use on paint tins with a thicker rim.

In order to fit well on paint tins with a thin as well as those with a thick rim, a third embodiment of the gripping device 61 is shown in figure 6, provided with double hooks 63, 65 and 67, 69 with a small and a large opening 71, 75 and 73, 77 respectively. All parts of this gripping device 61 that are the same as those in the drawings of the gripping device 1 shown in figures 1- 4, are indicated by the same reference number.

Finally, in figure 7 a fourth embodiment of the gripping device 81 is shown in perspective on a paint tin 83. Here as well, all parts of this gripping device 81 that are the same as those in the drawings of the gripping device 1 shown in figures 1- 4, are indicated by the same reference number. The handle 85 of this gripping device 81 is provided with an opening 87 in the middle of which a brush 89 can be hung.

Although in the above the invention is explained on the basis of the drawings, it should be noted that the invention is in no way limited to the embodiments shown in the drawings. The invention also extends to all embodiments deviating from the embodiments shown in the drawings within the context defined by the claims. Thus the free

outer ends of the handle's legs may also be attached to the grip's arms instead of sliding along the arms and the locking elements may be separate from the handle or even, if necessary, omitted.

CLAIMS:

1. Gripping device for use on a paint receptacle, in particular a tin of paint, comprising a U-shaped grip with a middle section that functions as a handgrip and two arms that are connected to it, the free outer ends of which are provided with a means of coupling in order to couple to a paint receptacle, in which at least the free outer ends of the arms can move with respect to the middle section, characterized in that the gripping device comprises a means of moving in order to move the free outer ends of the arms in a direction towards each other.

2. Gripping device according to claim 1, characterized in that the means of moving is made up of a U-shaped handle with a middle section and two legs that are connected to it, which handle is situated between the grip's arms, in which the middle section of the handle is situated near the middle section of the grip, and where the free outer ends of the handle's legs are coupled to the grip's arms.

3. Gripping device according to claim 2, characterized in that the free outer ends of the handle's legs are attached to the grip's arms.

4. Gripping device according to claim 2, characterized in that the free outer ends of the handle's legs can slide along the grip's arms, and the grip's arms are provided with stops that limit sliding of the free outer ends of the handle's legs in a direction towards the middle section of the grip.

5. Gripping device according to one of the previous claims, characterized in that each free end of the grip's arms is provided with a hook-shaped part that is a part of the means of coupling, in which the hook with the opening is turned outwards.

6. Gripping device according to claim 5, characterized in that each free outer end of the grip's arms in addition to the hook-shaped part is provided with an additional hook-shaped part with other dimensions than the hook-shaped part mentioned above.

7. Gripping device according to claim 5 or 6, characterized in that the gripping device furthermore comprises two locking elements which can be brought in front of the openings of the hook-shaped parts.

8. Gripping device according to claims 4 and 7, characterized in that the locking elements are attached to the free outer ends of the handle's legs.

9. Gripping device according to claim 7 or 8, characterized in that the locking elements are locking strips that can slide along the grip's arms.

10. Gripping device according to one of the preceding claims 7 through 9 inclusive, characterized in that the locking elements on the side turned towards the grip are provided with an opening for receiving an outward projecting rim on the periphery of the rim on the topside of a paint tin when fitting the gripping device to a paint tin.

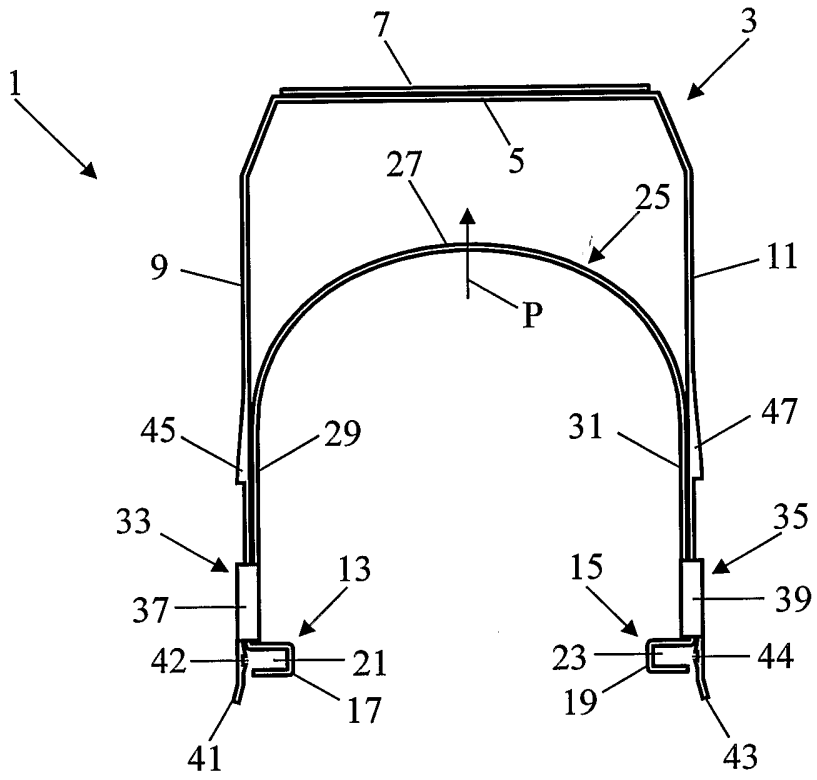
7
3
1
5
27
25
9
11
P
45
29
31
47
33
35
13
15
37
39
42
21
23
44
17
19
41
43

FIG. 1

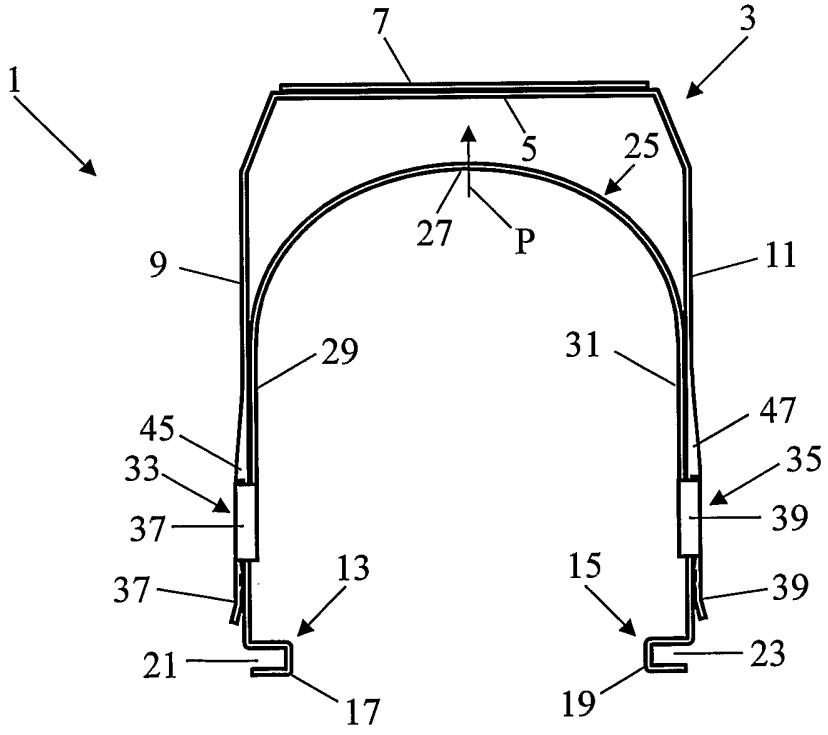
7
3
1
5
25
27
P
9
11
29
31
45
47
33
35
37
39
37
13
15
39
21
23
17
19

FIG. 2

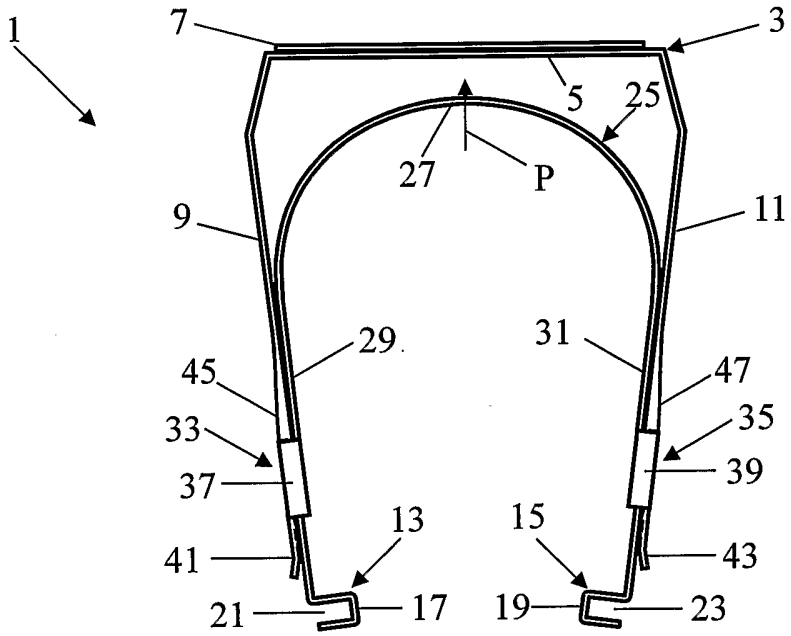
1
7
3
5
25
27
P
9
11
29
31
45
47
33
35
37
39
13
15
41
43
21
17
19
23

FIG. 3

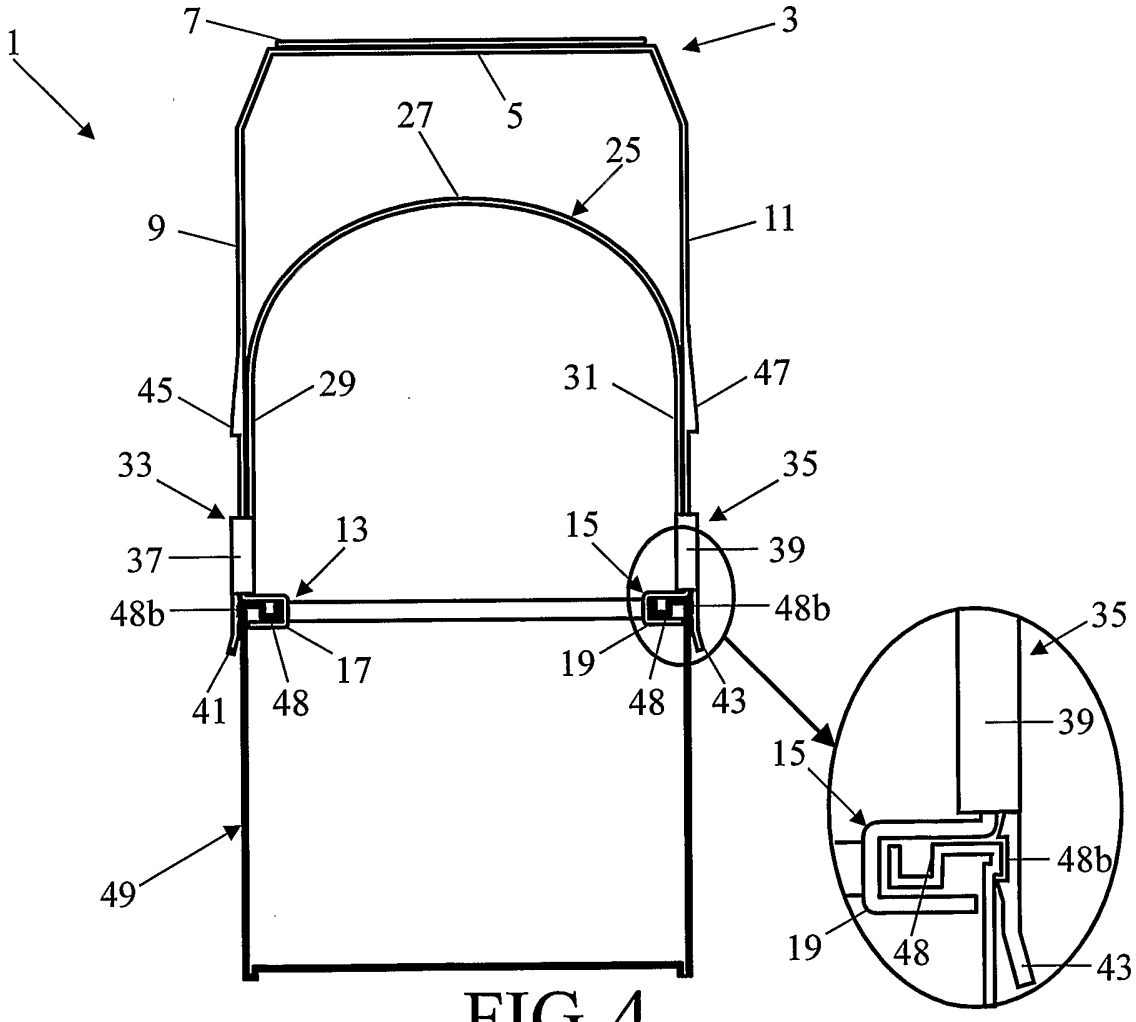
1
7
3
27
5
25
9
11
45
29
31
47
33
35
37
13
15
39
48b
48b
17
19
41
48
48
43
49
35
39
15
48b
19
48
43

FIG. 4

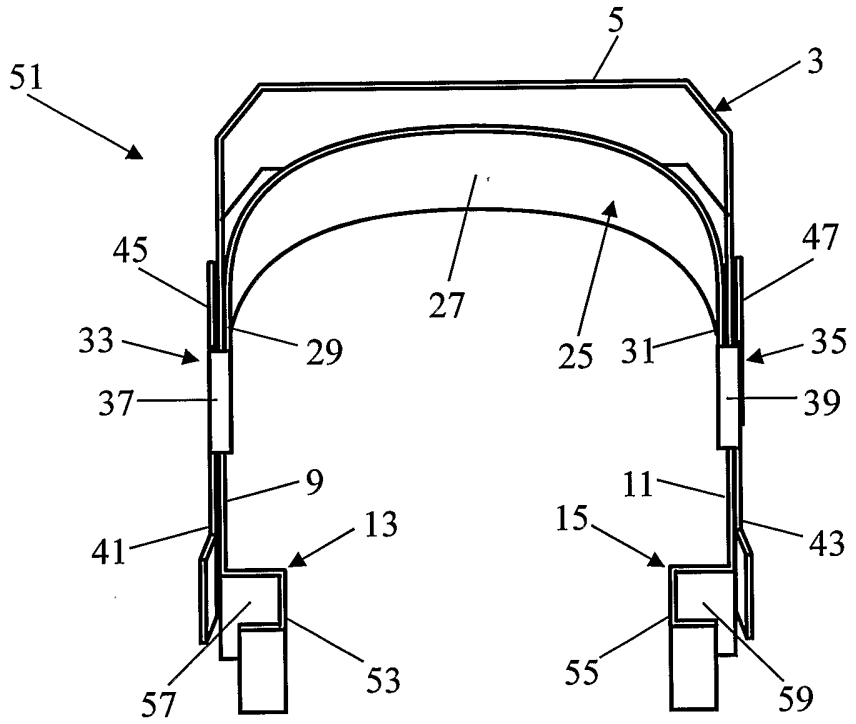
5
3
51
45
47
27
25
33
29
31
35
37
39
9
11
41
13
15
43
53
55
57
59

FIG. 5

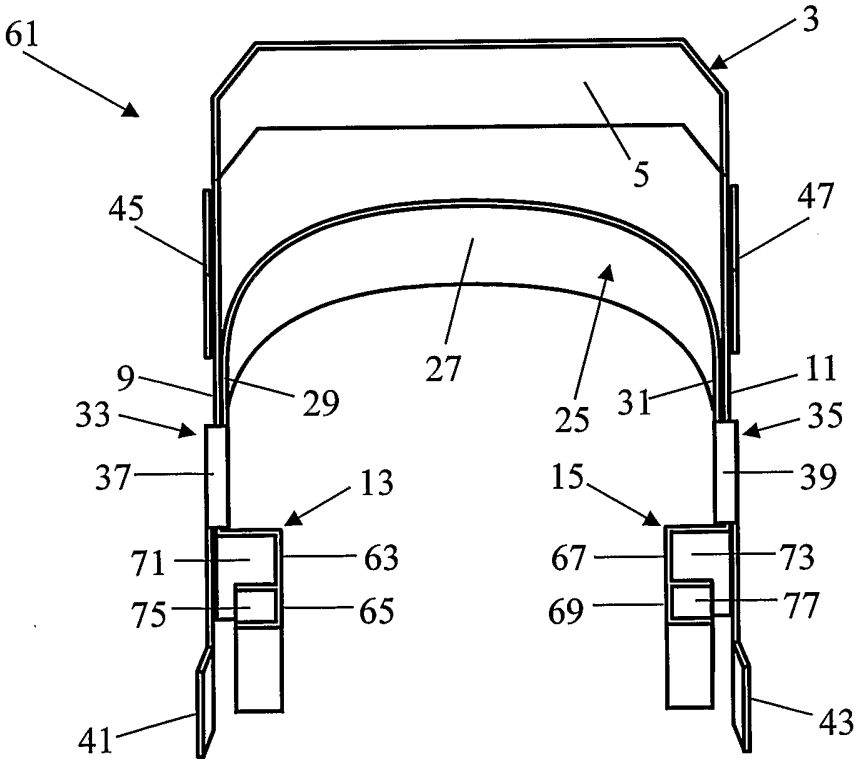
61
3
5
45
47
27
25
9
29
31
11
33
35
37
13
15
39
71
63
67
73
75
65
69
77
41
43

FIG. 6

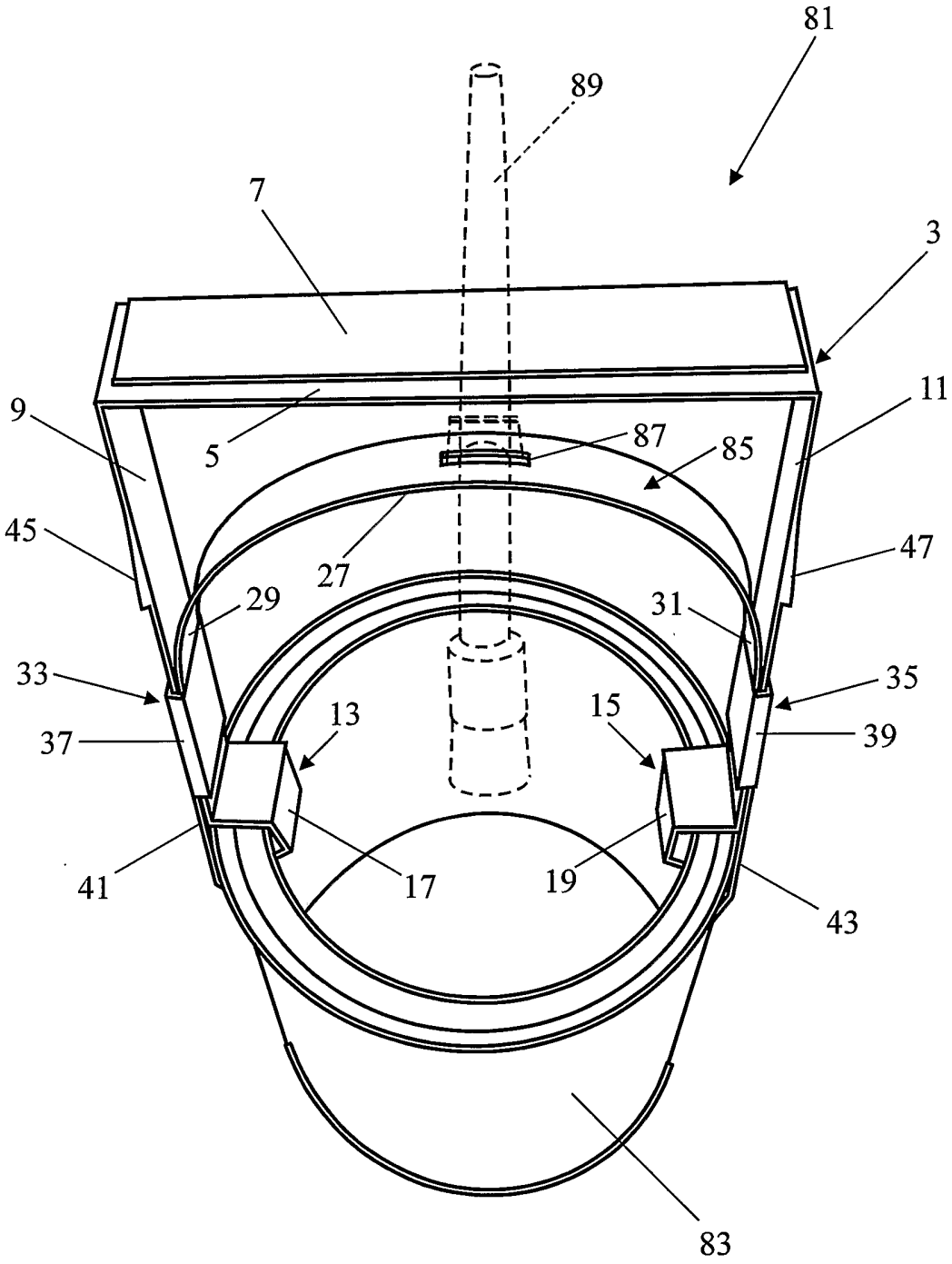

FIG. 7