United States Patent

Bala et al.

[15] **3,667,421**

[45] **June 6, 1972**

[54] MECHANISM FOR CONTROLLING THE THICKNESS OF A COATING IN A VAPOR DEPOSITION APPARATUS

[72] Inventors: **Mitchell J. Bala,** Enfield; **Sol S. Blecherman,** Newington, both of Conn.

[73] Assignee: **United Aircraft Corporation,** East Hartford, Conn.

[22] Filed: **Sept. 17, 1970**

[21] Appl. No.: **72,966**

Related U.S. Application Data

[63] Continuation-in-part of Ser. No. 806,872, Mar. 13, 1969, abandoned.

[52] **U.S. Cl.** **118/7,** 118/9, 118/10, 118/49.1

[51] **Int. Cl.** **B05c 11/00,** C23c 13/08

[58] **Field of Search** ..... 118/7, 48–49.5; 117/DIG. 2; 250/219; 219/121 EB, 121 L

[56] **References Cited**

UNITED STATES PATENTS

2,665,227	1/1954	Clough	118/7 UX
3,373,278	3/1948	Cilyo	118/49.5 X
3,167,454	1/1965	Tompson	118/425
3,522,836	8/1970	King	118/401
3,371,649	5/1968	Gowen	118/49.1
2,746,420	5/1956	Steigerwald	118/49.1 X
3,347,701	10/1967	Yamagishi	117/106 R
3,316,386	4/1967	Yaffe et al.	219/272
2,415,644	2/1947	Leonhard et al.	118/7 X
2,853,402	9/1958	Blois, Jr.	118/49 X

OTHER PUBLICATIONS

IBM Technical Disclosure Bulletin– Vol. 8 No. 2, July 1965, page 210– Potts et al. " Control of Evaporant in Vacuum From Output of Laser"

Primary Examiner—Morris Kaplan
Attorney—Charles A. Warren

[57] **ABSTRACT**

Apparatus for accurately determining and continuously measuring the thickness of a coating deposited on a substrate in a vacuum deposition chamber and for terminating the coating operation after the desired thickness is obtained, the apparatus utilizing a mechanical counter for determining the length of ingot fed to the crucible in combination with a precision laser device for maintaining a constant pool level in the crucible since the length of ingot fed is a direct indication of the thickness of the coating deposited.

2 Claims, 3 Drawing Figures

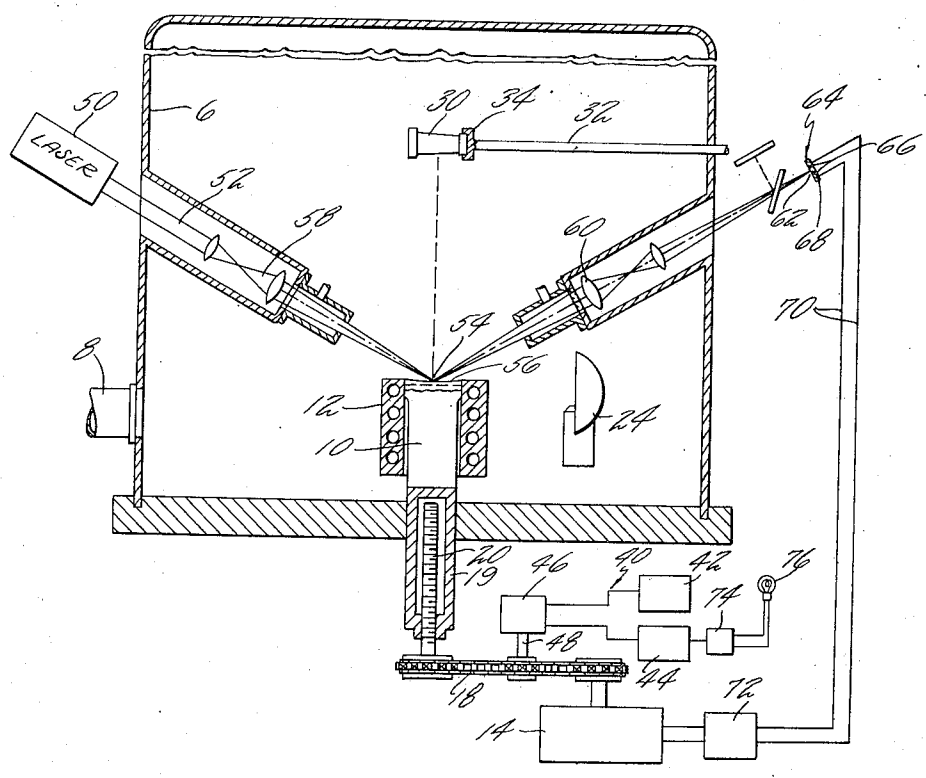

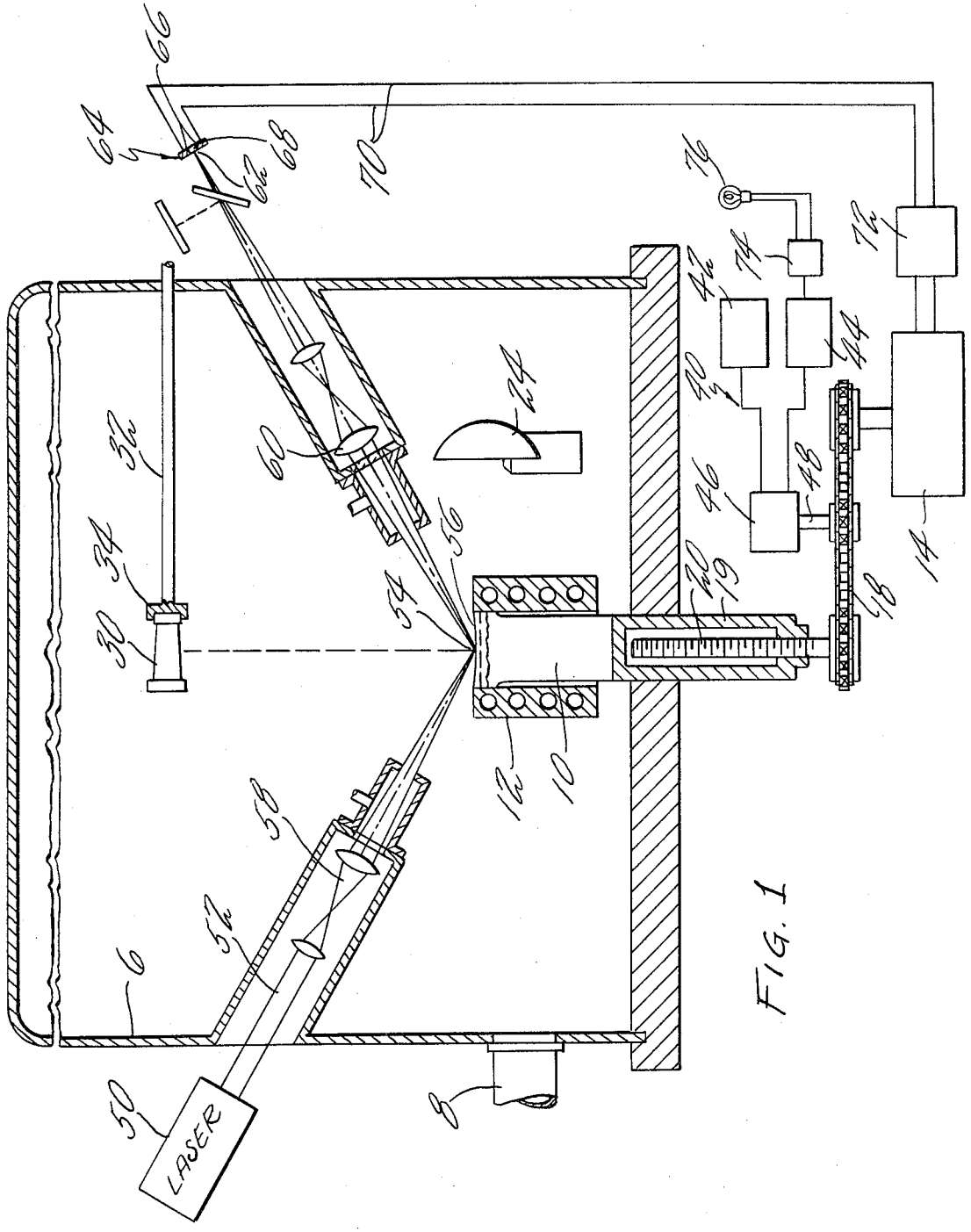

FIG. 1

INVENTORS
SOL S. BLECHERMAN
MITCHELL J. BALA
Charles A. Wilson
BY
ATTORNEY

FIG. 3

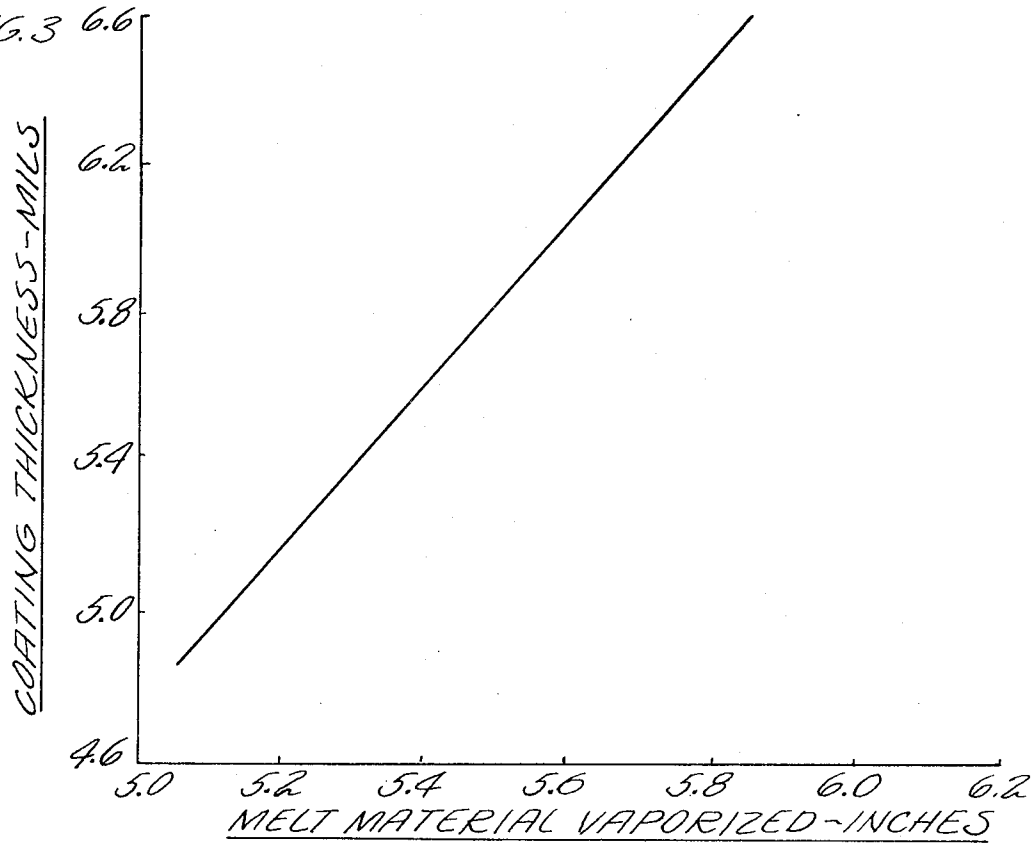
6.6
6.2
5.8
5.4
5.0
4.6
COATING THICKNESS-MILS
5.0
5.2
5.4
5.6
5.8
6.0
6.2
MELT MATERIAL VAPORIZED-INCHES

FIG. 2

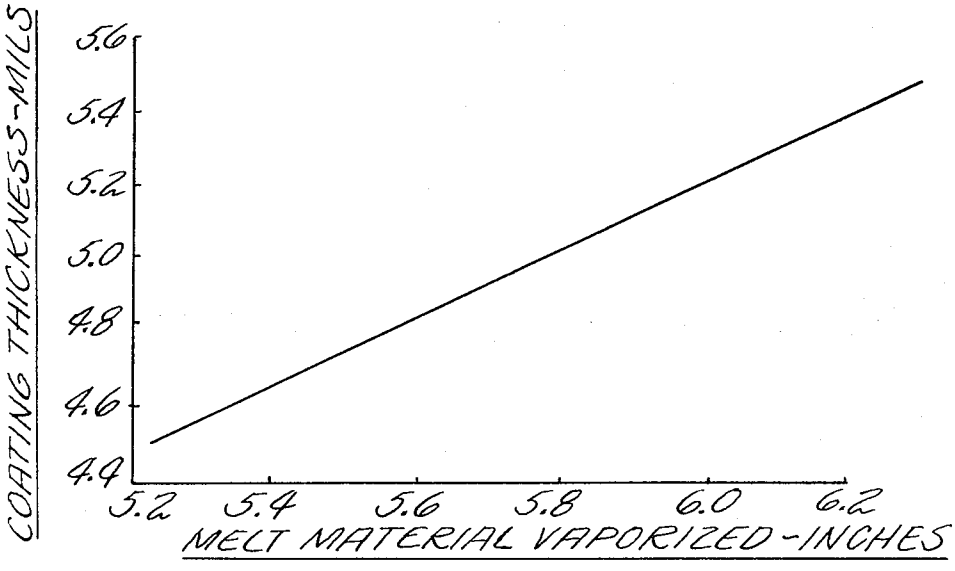
5.6
5.4
5.2
5.0
4.8
4.6
4.4
COATING THICKNESS-MILS
5.2
5.4
5.6
5.8
6.0
6.2
MELT MATERIAL VAPORIZED-INCHES

MECHANISM FOR CONTROLLING THE THICKNESS OF A COATING IN A VAPOR DEPOSITION APPARATUS

BACKGROUND OF THE INVENTION

This application is a continuation-in-part of applicants' co-pending application, Ser. No. 806,872, filed March 13, 1969 now abandoned.

The present invention relates to vacuum deposition of a metallic alloy coating on a substrate.

In electron beam vapor deposition apparatus in which a vacuum beam supplies the heat for the evaporation of an alloy to be used in coating a substrate, coating thickness control is of primary importance. The coating of substrates by evaporation of a coating alloy of two or more constituents requires that an equilibrium be maintained between the solid ingot, the molten pool and the vapors which leave the pool. If this equilibrium is maintained, coatings of constant and reproducible chemistry will be produced and a coating of uniform thickness on a substrate will be achieved.

One method for achieving thickness control of vapor deposited coatings is by weighing the coating deposit on a standard area of test plate located in close proximity to this substrate as shown as described in the co-pending application of Blecherman et al, Ser. No. 806,951, filed March 13, 1969, now U.S. Pat. No. 3,570,449. Monitoring crystal resonance changes is another technique used in the prior art particularly in thin film vacuum deposition processes. This latter technique however cannot be used effectively for thick coatings greater than 0.001 inch.

SUMMARY OF INVENTION

An object of the present invention is to provide a system that permits the highly accurate continuous determination of the weight of material deposited on a substrate in a vacuum deposition production system whether the coating is relatively thin or relatively thick. A further object of the invention is to provide for the termination or sequenced interruption of a coating operation when the coating reaches a predetermined thickness without the necessity for direct measurement of the thickness of a coating.

In electron beam vapor deposition in which the main coating parameters are established i.e. source to substrate distance, specimen configuration and specimen temperature, the length of ingot consumed, as vapor, to coat a specimen can be correlated with the thickness of the deposited coating. Therefore a relationship exists which can be continuously measured by knowing the quantity of ingot consumed and thereby provide a high degree of in-process control of the thickness deposited on the substrate. The amount or length of ingot used is precisely measured by maintaining a constant pool reference level during the entire coating operation.

BRIEF DESCRIPTION OF THE DRAWINGS

FIG. **1** is a vertical diagrammatic sectional view through a crucible and associated mechanism.

FIG. **2** is a graph showing the correlation between the length of a FeCrAlY ingot vaporized and the thickness of a deposited coating for a predetermined ingot cross-sectional area.

FIG. **3** is a graph showing the correlation between the length of a CoCrAlY ingot vaporized and the thickness of a deposited coating for a predetermined ingot cross-sectional area.

DESCRIPTION OF THE PREFERRED EMBODIMENT

The apparatus shown is used for the coating of articles with a metallic alloy which is vaporized by use of an electron beam. Referring to FIG. **1**, the vacuum chamber **6** has an outlet or evacuation port **8** connected to a conventional vacuum pump for the rapid evacuation of chamber **6**. The coating alloy is in the form of an ingot **10** extending upwardly into a water cooled bottom feed crucible **12**. As the ingot **10** is consumed by evaporation it is fed upwardly by a variable speed motor **14** actuated for example through a sprocket chain drive **18** connected to a feed screw **20**. The feed screw **20** extends upwardly into and is threaded in an actuator bar **19** which in turn supports and drives the ingot **10**.

The end of the ingot within the crucible is melted and vaporized by an electron beam from an electron beam source **24**. The beam is focused directly on the end of ingot **10** and melts the surface of the ingot to form a pool within the crucible and vaporizes the molten alloy to form a cloud of vapor above the crucible. In a position for deposition of the vaporized alloy thereon is a substrate or article **30** shown in the drawing as a turbine vane and held in position within the cloud of vapor above the crucible by a supporting device **32** carrying a clamp **34** for releasable attachment of the turbine vane.

The amount of coating deposited on the article is determined by utilizing the predetermined relationship which exists between the length of ingot consumed and coating thickness deposited. The present invention employs a mechanical counter system **40** which includes a first counter **42**, a second counter **44** and a counter drive means **46**. The counter system **40** which is mounted externally of the vacuum chamber is driven by the chain drive **18** through a driveshaft **48**. Since driveshaft **48** and feed screw **20** are both actuated by the same chain drive a direct relationship exists between the length of ingot feed and the number of revolutions of the driveshaft **48**.

Counters **42** and **44** are accordingly driven in timed relation to and record the number of revolutions of the feed screw **20** there being a predetermined number of counts recorded for each revolution of the feed screw. Specifically first counter **42** is utilized as a coarse counter and twelve counts recorded on this counter is equivalent to one revolution of feed screw **20** and **48** counts is equivalent to substantially one inch of ingot feed. Similarly second counter **44** is utilized as a fine counter and 144 counts recorded is equivalent to one revolution of feed screw **20** and 576 counts is equivalent to substantially 1 inch of ingot feed.

The measurement of ingot consumed by the use of the counters is dependable only if the top end of the molten unevaporated ingot, the pool level, remains at a fixed reference level in the crucible during the entire coating process. To control this height accurately, the laser system described in the co-pending application of House, Ser. No. 806,956, filed Mar. 13, 1969, having the same assignee as this application, is found to be most effective in the precise control of the pool level. The use of this device serves to maintain a constant pool height and thus makes accurate the determination of coating thickness by the length of ingot fed to the crucible.

Referring now to FIG. **1**, the device for maintaining a constant pool height is preferably a laser system and utilizes a laser source **50**, the beam **52** of which is focused to a small spot **54** on the reflecting surface **56** of the molten pool by suitable optics **58** details of which are given in the above identified House application. The light beam reflected from the pool surface is focused by detector optics **60** onto a spot **62** of a light sensitive detector **64**. This detector preferably has matching photo-electric cells **66** disposed within the plane of movement of the reflected beam and separated by a narrow gap **68**. From the photo-electric cells, one or the other of which is activated as the position of the reflected beam changes with changes in pool height, suitable electrical connections **70** to a signal processor **72** convey the necessary electrical impulses from the photo-electrical cells thereby to energize the actuator or motor **14** at varying speed for moving the ingot upwardly to maintain a constant pool level or height as the alloy is evaporated therefrom and to restore the reflected beam to the gap **68**.

As described in the House application the excessive sensitivity of the laser system to irregularities in the turbulent surface of the pool is overcome by the periodic sweep of the beam across the detector optics resulting from the turbulent surface and the signal processor averages these pulses and produces a control signal proportional to the difference

between the desired control height of the pool and the average height of the molten surface.

The effect of the laser is to control the pool height by supplying an actuating signal to the ingot feed motor to maintain a constant height of the pool during the coating operation and thus the amount of ingot feed measured by the mechanical counters is extremely precise and may be directly related to coating thickness. With this system, the counters may be used directly for interrupting a coating operation after a predetermined length of ingot has been fed into the crucible. To accomplish this, the fine counter **44** may incorporate a switch **74** actuated after a predetermined number of turns of the shaft **48** have been indicated and this switch serves to interrupt the coating operation by lighting a signal light **76**. A termination of a coating operation may involve a mechanical exchange of the coated article **30** for a non-coated article or a shutdown of the machine.

As above stated, the number of counts recorded on the counter system is directly related to coating thickness provided the several parameters above outlined are constant. Obviously the length of ingot fed for a predetermined thickness of a coating varies for different alloys and for different sizes of ingot. However, based on a nominally 2 inch diameter ingot it has been possible to establish the relationship between the coating thickness and the length of ingot fed.

FIG. **2** is the curve evolved for the so-called FeCrAlY alloys. This coating has a nominal composition of by weight 30 percent chromium, 15 percent aluminum, 0.5 percent yttrium, balance iron and from this curve one may readily determine the length of ingot feed to provide the desired coating thickness. FIG. **3** is the curve evolved for another coating alloy, CoCrAlY. This coating alloy has a nominal composition of by weight 20 percent chromium, 15 percent aluminum, 0.7 percent yttrium balance cobalt. To illustrate the predetermined relationship of counts recorded to melt vaporized and hence coating thickness deposited the following example is provided:

EXAMPLE I

Counter	Counts recorded	Type alloy	Melt vaporized	Coating thickness
42	26.4	FeCrAlY	0.55 inch	5.85 mils
44	316.25	FeCrAlY	0.55 inch	5.85 mils
42	28.8	CoCrAlY	0.60 inch	5.23 mils
44	345.0	CoCrAlY	0.60 inch	5.23 mils

By appropriately setting the counter **44** to actuate the switch **74** after a selected count is indicated the coating operation may be automated for sequenced continuous coating or the signal light **76** may be lighted to indicate the completion of the coating operation with the desired thickness of coating produced on the

We claim:

1. In a vapor deposition apparatus for use in coating articles

a vacuum chamber in which the article to be coated is positioned,

means for supporting an article within the chamber,

a crucible in the chamber in which the coating material is melted and vaporized to form a cloud of coating material vapor around the article,

means for feeding an ingot of coating material into the crucible,

means for heating the material at the end of the ingot to melt said material to form a pool in the crucible and to evaporate the material from the pool,

means for maintaining a constant level of the pool in the crucible including

means to determine the level of the pool,

means for actuating said ingot feeding means in response to a level indication by said level determining means,

means actuated by said feeding means for precisely measuring the length of ingot fed during the coating operation, and

means to signal the feed of a selected length of ingot to interrupt the coating operation.

2. Vapor deposition apparatus as in claim **1** in which the crucible is a bottom fed crucible and the level determining means is a laser system in which the beam is directed onto the surface of the pool and reflected to a light detector and the detector actuates the ingot feeding means.

* * * * *

PO-1050
(5/63)

UNITED STATES PATENT OFFICE
CERTIFICATE OF CORRECTION

Patent No. 3,667,421 Dated June 6, 1972

Inventor(s) MECHANISM FOR CONTROLLING THE THICKNESS OF A COATING IN A VAPOR DEPOSITION APPARATUS

It is certified that error appears in the above-identified patent and that said Letters Patent are hereby corrected as shown below:

In Fig. 2 of the drawing the dimensions for "Melt Material Vaporized - Inches" should read from .52 to .62 instead of 5.2 to 6.2

In Fig. 3 of the drawing the dimensions for "Melt Material Vaporized - Inches" should read .50 to .62 instead of 5.0 to 6.2

Signed and sealed this 3rd day of July 1973.

(SEAL)
Attest:

EDWARD M.FLETCHER,JR.
Attesting Officer

Rene Tegtmeyer
Acting Commissioner of Patents