PCT WORLD INTELLECTUAL PROPERTY ORGANIZATION
International Bureau

INTERNATIONAL APPLICATION PUBLISHED UNDER THE PATENT COOPERATION TREATY (PCT)

(51) International Patent Classification 6 : B25B 1/02	A1	(11) International Publication Number: WO 98/05474
		(43) International Publication Date: 12 February 1998 (12.02.98)

(21) International Application Number: PCT/US97/13852

(22) International Filing Date: 6 August 1997 (06.08.97)

(30) Priority Data:
08/692,062 7 August 1996 (07.08.96) US

(71) Applicant *(for all designated States except US)*: BLACK & DECKER INC. [US/US]; 1423 Kirkwood Highway, Newark, DE 19711 (US).

(72) Inventors; and
(75) Inventors/Applicants *(for US only)*: FORTIN, Marc, A. [CA/CA]; 809 Colonel Curry Drive, Brockville, Ontario K6V 6L9 (CA). HUNTER, Murray, D. [CA/CA]; 40 Russell Street West, Smiths Falls, Ontario K7A 1P2 (CA).

(74) Agents: YOCUM, Charles, E. et al.; The Black & Decker Corporation, 701 E. Joppa Road, Towson, MD 21286 (US).

(81) Designated States: AL, AM, AT, AU, AZ, BA, BB, BG, BR, BY, CA, CH, CN, CU, CZ, DE, DK, EE, ES, FI, GB, GE, HU, IL, IS, JP, KE, KG, KP, KR, KZ, LC, LK, LR, LS, LT, LU, LV, MD, MG, MK, MN, MW, MX, NO, NZ, PL, PT, RO, RU, SD, SE, SG, SI, SK, TJ, TM, TR, TT, UA, UG, US, UZ, VN, ARIPO patent (GH, KE, LS, MW, SD, SZ, UG, ZW), Eurasian patent (AM, AZ, BY, KG, KZ, MD, RU, TJ, TM), European patent (AT, BE, CH, DE, DK, ES, FI, FR, GB, GR, IE, IT, LU, MC, NL, PT, SE), OAPI patent (BF, BJ, CF, CG, CI, CM, GA, GN, ML, MR, NE, SN, TD, TG).

Published
With international search report.

(54) Title: WORK BENCH INCLUDING A VISE

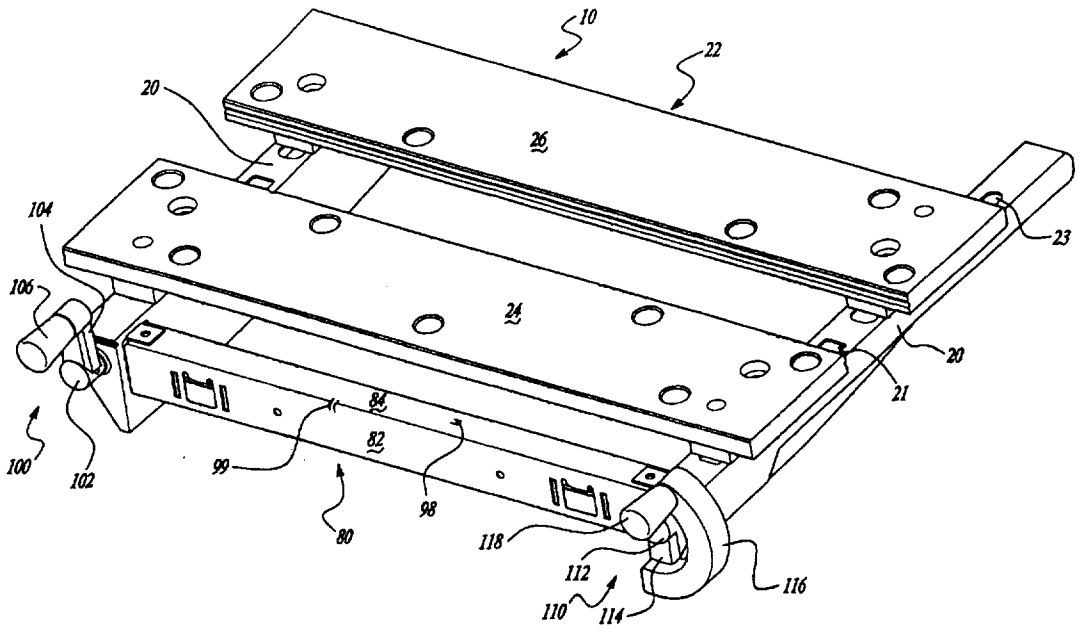

(57) Abstract

A work bench (10) includes a frame (12), a bench surface on the frame with the bench surface including at least two members (24, 26), one of which is movable along the frame for clamping a workpiece between the members. A mechanism for moving the member includes two screws (30) coupled with the members. The two screws are spaced with the member for moving the member upon rotation of the screws. A sprocket (50) is coupled with each of the screws. A transmission belt or chain (56) is coupled with the sprockets. At least one handle (100, 110) is coupled with one of the screws to rotate the screws. At least one clutch (70) is coupled with the at least one screw to limit clamping pressure on the workpiece. Also, a guard (80) may be present which covers the transmission belt or chain.

FOR THE PURPOSES OF INFORMATION ONLY

Codes used to identify States party to the PCT on the front pages of pamphlets publishing international applications under the PCT.

AL	Albania	**ES**	Spain	**LS**	Lesotho	**SI**	Slovenia
AM	Armenia	**FI**	Finland	**LT**	Lithuania	**SK**	Slovakia
AT	Austria	**FR**	France	**LU**	Luxembourg	**SN**	Senegal
AU	Australia	**GA**	Gabon	**LV**	Latvia	**SZ**	Swaziland
AZ	Azerbaijan	**GB**	United Kingdom	**MC**	Monaco	**TD**	Chad
BA	Bosnia and Herzegovina	**GE**	Georgia	**MD**	Republic of Moldova	**TG**	Togo
BB	Barbados	**GH**	Ghana	**MG**	Madagascar	**TJ**	Tajikistan
BE	Belgium	**GN**	Guinea	**MK**	The former Yugoslav Republic of Macedonia	**TM**	Turkmenistan
BF	Burkina Faso	**GR**	Greece			**TR**	Turkey
BG	Bulgaria	**HU**	Hungary	**ML**	Mali	**TT**	Trinidad and Tobago
BJ	Benin	**IE**	Ireland	**MN**	Mongolia	**UA**	Ukraine
BR	Brazil	**IL**	Israel	**MR**	Mauritania	**UG**	Uganda
BY	Belarus	**IS**	Iceland	**MW**	Malawi	**US**	United States of America
CA	Canada	**IT**	Italy	**MX**	Mexico	**UZ**	Uzbekistan
CF	Central African Republic	**JP**	Japan	**NE**	Niger	**VN**	Viet Nam
CG	Congo	**KE**	Kenya	**NL**	Netherlands	**YU**	Yugoslavia
CH	Switzerland	**KG**	Kyrgyzstan	**NO**	Norway	**ZW**	Zimbabwe
CI	Côte d'Ivoire	**KP**	Democratic People's Republic of Korea	**NZ**	New Zealand		
CM	Cameroon			**PL**	Poland		
CN	China	**KR**	Republic of Korea	**PT**	Portugal		
CU	Cuba	**KZ**	Kazakstan	**RO**	Romania		
CZ	Czech Republic	**LC**	Saint Lucia	**RU**	Russian Federation		
DE	Germany	**LI**	Liechtenstein	**SD**	Sudan		
DK	Denmark	**LK**	Sri Lanka	**SE**	Sweden		
EE	Estonia	**LR**	Liberia	**SG**	Singapore		

WORK BENCH INCLUDING A VISE

FIELD OF THE INVENTION

The invention relates to portable work benches or tables which include an integral clamping table or vise. More particularly, the present invention relates to a work table with a clamping table or vise where the vise may be operated with one hand.

BACKGROUND OF THE INVENTION

Carpenters, woodworkers and handymen which work with wood as well as other materials, often need a work bench or table which may be utilized to hold workpieces. Ordinarily, these work benches include a vise which clamps portions of the table top together to secure the workpiece on the table. One such device is that of the assignee of the present invention which is sold under the WORKMATE™ trademark. These tables are versatile, provide for secure clamping, are compact and are convertible to dual height positions.

The work bench ordinarily includes two vise screws with handles on each one. The vise screws, via the handles, are operated by the user with the user using both hands. While a user may utilize one hand, the user must rotate both handles in order to clamp a workpiece between the clamping table members. Accordingly, it is desirable to utilize one hand to crank both of the vise screws so that clamping of the workpiece may be accomplished by the user using only one hand. By enabling cranking of the vise

to clamp the workpiece with one hand, the user is capable of holding the workpiece in place with his other hand. Also, it is desirable that the vise clamp irregular objects while turning the vise screws with one hand.

SUMMARY OF THE INVENTION

Accordingly, it is an object of the present invention to provide an improved vise for a work bench which enables the vise to be tightened down utilizing one hand.

In accordance with one aspect of the invention, a work bench comprises a frame; a table surface on the frame, with the table surface including at least two members; one of which is movably coupled with the frame to enable clamping of a workpiece between the two table surface members. A drive mechanism moves the table members with respect to one another. The drive mechanism includes two screws coupled with one of the members. The two screws are spaced from one another to move the table member upon rotation of the screws. A sprocket is coupled with each screw. A transmission belt or chain is coupled with the sprocket to drive the screws together. At least one handle is coupled with one of the screws to rotate the screws. At least one clutch is coupled with at least one screw to limit clamping pressures on the workpiece. The clutch enables rotation of one screw with respect to the other screw so that irregular workpieces may be clamped between the table members and clamping of the workpiece may be accomplished by rotation of the handle by one hand of the operator. The clutch is self-actuating. The clutch includes a spring and a detent

removably coupled within slots in a hub of the sprocket. Also, both screws may include a clutch. Further, each screw may include a handle. One of the handles has a different configuration than the other to identify to the user that clamping of the table surfaces may be accomplished by rotation of only one handle to drive both screws.

In accordance with a second embodiment, a work bench includes a frame; a table surface on the frame, with the table surface including at least two members; one of which is movably coupled with the frame to enable clamping of a workpiece between the two table surface members. A drive mechanism moves the table members with respect to one another. The drive mechanism includes two screws coupled with one of the members. The two screws are spaced from one another to move the table member upon rotation of the screws. A sprocket is coupled with each screw. A transmission belt or chain is coupled with the sprocket to drive the screws together. At least one handle is coupled with one of the screws to rotate the screws. At least one clutch is coupled with at least one screw to limit clamping pressures on the workpiece. The clutch enables rotation of one screw with respect to the other screw so that irregular workpieces may be clamped between the table members and clamping of the workpiece may be accomplished by rotation of the handle by one hand of the operator. A guard covers the transmission belt or chain. The guard is coupled with the frame. The guard includes at least one tensioning member unitarily formed with and extending from the guard.

The guard includes at least one alignment member to maintain alignment of the belt or chain to the sprocket. A biasing member is associated with the belt or chain to automatically adjust to changes in the belt or chain length to take up slack and provide positive belt or chain tension. The biasing member may be a helical spring. Further, the guard may include two tensioning members as well as two pairs of alignment members, each pair sandwiching a tension member.

In accordance with a third aspect of the invention, a work bench comprises a frame; a table surface on the frame, with the table surface including at least two members; one of which is movably coupled with the frame to enable clamping of a workpiece between the two table surface members. A drive mechanism moves the table members with respect to one another. The drive mechanism includes two screws coupled with one of the members. The two screws are spaced from one another to move the table member upon rotation of the screws. A sprocket is coupled with each screw. A transmission belt or chain is coupled with the sprocket to drive the screws together. At least one handle is coupled with one of the screws to rotate the screws. At least one clutch is coupled with at least one screw to limit clamping pressures on the workpiece. The clutch enables rotation of one screw with respect to the other screw so that irregular workpieces may be clamped between the table members and clamping of the workpiece may be accomplished by rotation of the handle by one hand of the operator. The handle includes a hub, a straight portion

extending from the hub, a curved portion extending from the straight portion, and a knob extending from the curved portion. The knob enables rotation of the handle. The curved portion has a truncated U-shape with one end coupled with the straight portion and the knob extending from the other end. The hub has a desired height as well does the straight portion which is less than that of the hub. The curved portion has a height greater than the hub. An end of the curved portion and a side of the straight portion are continuous forming a planar side portion of the handle. A connecting member extends from the hub and is unitary with the straight portion and a portion of the curved portion. The handle may be injected molded from a plastic material.

In accordance with a fourth aspect of the invention, a guard for a work bench drive transmission comprises a first wall, at least one second wall extending substantially perpendicular to the first wall, and at least one guide extending from the first wall. The guide extends transverse to the direction of travel of the transmission belt or chain. Preferably, a second guide extends from the first wall. Preferably, two parallel spaced second walls extend from the first wall. An alignment member extends from the first wall. Preferably, the alignment member is stamped into the first wall and two alignment members sandwich each guide member. Also, a second wall includes a biasing member to provide positive belt or chain tension. The first or second walls include cut-outs to secure the helical spring biasing member to the guard.

In accordance with a fifth aspect of the invention, a handle for operating a movable work bench comprises a hub, a straight portion extending from the hub, and a curved portion extending from the straight portion. A knob extends from the curved portion to enable rotation of the handle. The curved portion has a truncated U-shape with one end coupled with the straight portion and the knob extending from the other end. The hub has a desired height, as well does the straight portion, which is less than the height of the hub. Also, the curved portion has a height greater than the hub. Also, one end of the curved portion and a side of the straight portion are continuous forming a planar side portion of the handle. A connecting member extends between the hub, straight and curved portions, and is unitary with the three. The handle is ordinarily molded from a plastic material.

In accordance with a sixth aspect of the invention, a belt or chain drive transmission for a work bench comprises two screws adapted for coupling with a member to be moved against another member to provide clamping. A sprocket is coupled with each of the screws. A transmission belt or chain is coupled with the sprockets. At least one handle is coupled with one of the screws to rotate the screws. At least one clutch is coupled with at least one screw to limit clamping pressures on a workpiece. The clutch enables rotation of both screws, one with respect to the other which is being directly rotated. The clutch is self-actuating and includes a spring and a detent coupled with a slot in a hub of the sprocket. Preferably, each screw

includes a clutch and each screw includes a handle. Also, one of the handles has a different configuration which identifies to the user that only one handle may be rotated to drive both the screws. Also, each screw includes a stop to position the spring with respect to the sprocket.

With respect to a seventh aspect of the invention, a work bench includes a frame; a table surface on the frame, with the table surface including at least two members; one of which is movably coupled with the frame to enable clamping of a workpiece between the two table surface members. A drive mechanism moves the table members with respect to one another. The drive mechanism includes two screws coupled with one of the members. The two screws are spaced from one another to move the table member upon rotation of the screws. A sprocket is coupled with each screw. A transmission belt or chain is coupled with the sprocket to drive the screws together. At least one handle is coupled with one of the screws to rotate the screws. At least one clutch is coupled with at least one screw to limit clamping pressures on the workpiece. The clutch enables rotation of one screw with respect to the other screw so that irregular workpieces may be clamped between the table members and clamping of the workpiece may be accomplished by rotation of the handle by one hand of the operator. A guard covers the transmission belt or chain. The guard is coupled with the frame. The guard includes at least one tensioning member unitarily formed with and extending from the guard. The guard includes at least one alignment member to maintain alignment of the belt or chain

to the sprocket. A biasing member is associated with the belt or chain to automatically adjust to changes in the belt or chain length to take up slack and provide positive belt or chain tension. The biasing member may be a helical spring. Further, the guard may include two tensioning members as well as two pairs of alignment members, each pair sandwiching a tension member. The handle includes a hub, a straight portion extending from the hub, a curved portion extending from the straight portion, and a knob extending from the curved portion. The knob enables rotation of the handle. The curved portion has a truncated U-shape with one end coupled with the straight portion and the knob extending from the other end. The hub has a desired height as does the straight portion, which is less than that of the hub. The curved portion has a height greater than the hub. An end of the curved portion and a side of the straight portion are continuous to form a planar side portion of the handle. A connecting member extends from the hub and is unitary with the straight portion and a portion of the curved portion. The handle may be injected molded from a plastic material.

Additional objects and advantages of the invention will be apparent from the detailed description of the preferred embodiment, and the appended claims and accompanying drawings, or may be learned by practice of the invention.

BRIEF DESCRIPTION OF THE DRAWINGS

The accompanying drawings, which are incorporated in and constitute a part of the specification, illustrate one embodiment of the present invention and together, with the description, serve to explain the principles of the invention. In the drawings, the same reference numerals indicate the same parts.

Figure 1 is a perspective view of a work bench top in accordance with the present invention.

Figure 2 is a side elevation view of the work bench with the top of Figure 1.

Figure 3 is an exploded perspective view of Figure 1.

Figure 4 is a cross-section view of Figure 1 along line 4-4 thereof.

Figure 5 is a perspective partially in cross-section view of a portion of the transmission drive of the present invention.

Figure 6 is an enlarged perspective view of a portion of the drive.

Figure 7 is a perspective view of the handle without the knob in accordance with the present invention.

Figure 8 is a cross-section view of Figure 7 along line 8-8 thereof.

Figure 9 is a cross-section view of Figure 7 along line 9-9 thereof.

Figure 10 is an enlarged cross-section view of Figure 1 along line 10-10 thereof.

DETAILED DESCRIPTION OF THE PREFERRED EMBODIMENT

The preferred embodiment of the present invention is a work bench which is identified with the reference numeral 10. The work bench includes a frame structure 12 which includes a base 14, four foldable legs 16, two upright H supports 18 which extend from the base 16, and brackets 20 at the other end of the supports 18. The work bench 22 is generally formed from two members 24 and 26 which are coupled with the brackets 20.

The brackets 20 are hollow and include elongated slots 21 which enable movement of the front table 24 with respect to the brackets 20. Also, the brackets include apertures 23 to enable the second table portion 26 to be stationarily locked onto the brackets 20. An additional slot 25 is formed in the side of the brackets 20 to enable the belt 56 to pass into the brackets 20 and be coupled with the sprockets 50.

Two screws 30 are positioned within the brackets 20. The screws include a threaded portion 32 which includes a threaded pivot nut 34 which in turn, via a block 36, is coupled with the front moving member 24 of the work bench 22. Also, the screws 30 includes a smooth shank portion 38 which includes a portion which extends out beyond the bracket 20 as seen in Figure 1. The smooth shank portion 38 includes a stop 40 as well as apertures 44 and 46.

Sprockets 50 are slidably positioned onto the smooth shank portion 38 of the screws 30. The sprocket 50, as shown, has projecting members 52 which extend into apertures 54 of the belt 56. However, if a chain is used,

the projections may be substituted for recesses or the like. The sprocket 50 includes a hub 58 which includes slots or detents 60. The slots 60 are adapted to couple with a detent pin 62 which passes through aperture 44 of the screw 30.

A helical spring 64 is positioned on the smooth shank portion 38 abutting the stop 40 and the sprocket 50. The spring 64 along with the detent pin 62, sprocket 50 and sprocket slots 60 act as a clutch which limits the pressure which can be applied onto the workpiece. The slot or detent 60 in the sprocket enables transmission of light torques necessary to overcome friction to move the first member 24 providing one hand operation. At high clamping torques, the pin 62 disengages from the sprocket detent or slot 60 and compresses the clutch spring 64. When unclamping the workpiece, the clutch automatically engages the pin 62 via the sprocket detent 60 to once again allow one handed operation. The clutch 70 could be incorporated on both screws or a single clutch may be provided. In the case of a single clutch, the other sprocket will be securely pinned to the vise screw. Preferably, each of the screws 30 includes a clutch 70 as described above.

A guard 80 is positioned over the transmission belt or chain 56. The guard 80 includes a first wall 82 and at least one second wall 84, preferably two, which are perpendicular to the first wall 82 forming an overall U-shape and define a channel 85. The guard 80 includes two guides 86 stamped in and cut out of the first wall 82. The guides 86 extend substantially perpendicular to the first

wall 80 into the channel 85. The guides 86 are substantially parallel with the second wall 82 and apply tension on the leading 55 side of the belt 56. The guides 86 help to tension the belt or chain as it moves during rotation of the screws 30. Also, the guides 86 extend from the wall 82 transverse to the direction of travel of the belt 56. The guard 80 spans the length of the belt 56 and is secured with the brackets 22 which, in turn, provides additional stability for the frame 12.

Two embossed alignment members 90, 92 sandwich the guide 86. The alignment members 90, 92 are stamped into the first wall 82 of the guard 80. The alignment members 90, 92 help to maintain the belt 56 or chain onto the sprockets 50 during the clamping modes.

A biasing member 96 is secured to the second wall 82 to automatically adjust for changes in belt length and to take up slack in the belt 56. The biasing member 96 is a helical spring which is secured on cut-outs 98, 99 in the guard 80. The spring 96 always provides for positive belt 56 or chain tension. The spring 96 is positioned under the belt 56 and tensions both the leading 55 and trailing 57 sides of the belt 56.

Each screw includes a handle 100 and 110. The handle 100 includes a hub 102, a handle arm 104 and a knob 106. The handle 110 includes a hub 112, a straight portion 114, a curved portion 116 and a knob 118. The hub 112 has a desired height which is larger than the straight portion 114, but less than the curved portion 116. The curved portion 116 has an overall truncated U-shape. Also, a

connecting member 120 extends between the hub 112, straight portion 114, and curved portion 116. The handle 110 provides a visual indication to the user that the work bench clamping system may be rotated with one hand. Also, the hub 112 includes an aperture 122 which enables a pin 124 to pass there-through to secure the handle on the screw 30 through the aperture 46. Likewise, the handle 100 includes an aperture and a pin to secure it on the screw 30.

The work bench vise of the present invention is ordinarily operated as follows. One of the handles 100, 110 is rotated which, in turn, rotates either one of the screws 30. The rotation of the screw 30 rotates the sprocket 50 and via belt 56 rotates the other screw 30 via its sprocket 50. Thus, both of the screws 30 rotate at the same time, ordinarily, synchronously. As the user is utilizing one hand to rotate both screws 50, the user can use his other hand to hold the workpiece in between the two table members 24, 26. As the table members 24, 26 contact the workpiece, and especially if the workpiece has an irregular shape, the front table member 24 will contact the workpiece and the sprocket 50 will compress against the spring 64 and move away from the pin 62, thus engaging the clutch 70. If an irregular shaped workpiece is between the table portions, then one of the screws 30 will not rotate due to the clutching effect while the other will continue to rotate to clamp on the irregular shape of the workpiece.

Once the workpiece is initially clamped and not over

tightened, the individual screws can be shored up to give a firm grip onto the workpiece.

While the above detailed description describes the preferred embodiment of the present invention, the invention is susceptible to modification, variation, and alteration without deviating from the scope and fair meaning of the subjoined claims.

CLAIMS

1. A work bench comprising:

a frame;

a table surface on said frame, said table surface including at least two members, at least one of said members movably coupled with said frame for enabling clamping of a workpiece between said members; and

a mechanism for moving said members, said mechanism including two screws coupled with one of said members, said two screws spaced with said member for moving said member upon rotation of said screws;

a sprocket coupled with each screw;

a transmission belt or chain coupled with said sprockets, at least one handle coupled with one of said screws for rotating said screws, at least one clutch coupled with at least one screw for limiting clamping pressure on the workpiece, and said clutch enabling rotation of one screw with respect to the other screw so that irregular workpieces may be clamped between said members and clamping of the workpiece may be accomplished by rotation of the screws with one hand of an operator.

2. The work bench according to Claim 1, wherein said clutch being self actuating.

3. The work bench according to Claim 2, wherein said clutch includes a spring and a detent in said sprocket.

4. The work bench according to Claim 1, wherein each screw includes a clutch.

5. The work bench according to Claim 1, wherein each screw includes a handle.

6. A work bench comprising:

a frame;

a table surface on said frame, said table surface including at least two members, at least one of said members movably coupled with said frame for enabling clamping of a workpiece between said members; and

a mechanism for moving said members, said mechanism including two screws coupled with one of said members, said two screws spaced with said member for moving said member upon rotation of said screws;

a sprocket coupled with each screw;

a transmission belt or chain coupled with said sprockets, at least one handle coupled with one of said screws for rotating said screws, at least one clutch coupled with at least one screw for limiting clamping pressure on the workpiece, and said clutch enabling rotation of one screw with respect to the other screw so that irregular workpieces may be clamped between said members and said handle enabling clamping of a workpiece by rotation with one hand of an operator; and

a guard for covering said transmission belt or chain, said guard coupled with said frame.

7. The work bench according to Claim 6, wherein said guard includes at least one tensioning member unitarily formed with and extending from said guard.

8. The work bench according to Claim 6, wherein said guard includes at least one alignment member to maintain alignment of the belt or chain on the sprocket.

9. The work bench according to Claim 6, wherein a biasing member being associated with said belt or chain for eliminating slack in said belt or chain.

10. The work bench according to Claim 9, wherein the biasing member is a spring which biases both a leading and trailing portion of the belt or chain.

11. The work bench according to Claim 7, wherein said guard includes two tensioning member.

12. The work bench according to Claim 8, wherein said guard includes two pair of alignment members each pair sandwiching a tensioning member.

13. A work bench comprising:

a frame;

a table surface on said frame, said table surface including at least two members, at least one of said members movably coupled with said frame for enabling clamping of a workpiece between said members; and

a mechanism for moving said members, said mechanism including two screws coupled with one of said members, said two screws spaced with said member for moving said member upon rotation of said screws;

a sprocket coupled with each screw;

a transmission belt or chain coupled with said sprockets, at least one handle coupled with one of said screws for rotating said screws, at least one clutch coupled with at least one screw for limiting clamping pressure on the workpiece, and said clutch enabling rotation of one screw with respect to the other screw so that irregular workpieces may be clamped between said members and said handle enabling clamping of a workpiece by rotation with one hand of an operator; and

said handle including a hub, a straight portion extending from said hub, a curved portion extending from said straight portion, and a knob extending from said curved portion for enabling rotating of said handle.

14. The work bench according to Claim 13, wherein said curved portion has a truncated U-shape with one end coupled with said straight portion and said knob extends from the other end of said curved portion.

15. The work bench according to Claim 14, wherein said hub has a desired height, said straight portion has a height less than said hub and said curved portion having a height greater than said hub.

16. The work bench according to Claim 15, wherein in an end of said curved portion and a side of said straight portion are continuous forming a planar portion.

17. The work bench according to Claim 16, wherein a connecting member extended from said hub and is unitary with said straight and curved portions.

18. The work bench according to Claim 17, wherein said handle is an injection molded plastic material.

19. The guard for a work bench drive transmission belt or chain comprising:

a first wall, at least one second wall extending substantially perpendicular to said first wall, and at least one guide extending from said first wall, said guide extending from said first wall transverse to the direction of travel of the transmission belt or chain.

20. The work bench guard according to Claim 19, wherein a second guide extends from said first wall.

21. The work bench guard according to Claim 19, wherein a pair of parallel spaced second walls extend from said first wall.

22. The work bench guard according to Claim 19, wherein an alignment member extends from said first wall.

23. The work bench guard according to Claim 22, wherein said alignment member is stamped in said first wall.

24. The work bench guard according to Claim 23, wherein a pair of alignment members sandwich said guide member.

25. The work bench guard according to Claim 19, wherein said second wall includes a biasing member for providing positive belt or chain tension.

26. The work bench guard according to Claim 25, wherein said biasing member is a helical spring.

27. The work bench guard according to Claim 26, wherein said first or second walls include cutouts for securing said spring.

28. A handle for operating a movable work bench comprising:

a hub, a straight portion extending from said hub, a curved portion extending from said straight portion, and a knob extending from said curved portion for enabling rotating of said handle.

29. The work bench according to Claim 28, wherein said curved portion has a truncated U-shape with one end coupled with said straight portion and said knob extends from the other end of said curved portion.

30. The work bench according to Claim 29, wherein said hub has a desired height, said straight portion has a height less than said hub and said curved portion having a height greater than said hub.

31. The work bench according to Claim 30, wherein in an end of said curved portion and a side of said straight portion are continuous forming a planar portion.

32. The work bench according to Claim 31, wherein a connecting member extended from said hub and is unitary with said straight and curved portions.

33. The work bench according to Claim 32, wherein said handle is an injection molded plastic material.

34. A belt or chain drive transmission for a work bench comprising:

two screws adapted for coupling with a member to be moved against another to provide clamping;

a sprocket coupled with each screw;

a transmission belt or chain coupled with said sprocket;

at least one handle coupled with one of said screws for rotating said screws; and

at least one clutch coupled with at least one screw for limiting clamping pressure on a workpiece, and said clutch enabling rotation of the other screw with respect to the screw which is being rotated.

35. The work bench according to Claim 34, wherein said clutch being self actuating.

36. The work bench according to Claim 35, wherein said clutch includes a spring and a detent in said sprocket.

37. The work bench according to Claim 34, wherein each screw includes a clutch.

38. The work bench according to Claim 34, wherein each screw includes a handle.

39. The work bench according to Claim 38, wherein one handle has a different configuration identity that only one handle need be rotated to drive said screws.

40. The work bench according to Claim 36, wherein each screw includes a stop for positioning said spring with respect to said sprocket.

41. The work bench according to Claim 5, wherein one handle has a different configuration identity that only one handle need be rotated to drive said screws.

42. A work bench comprising:

a frame;

a table surface on said frame, said table surface including at least two members, at least one of said members movably coupled with said frame for enabling clamping of a workpiece between said members; and

a mechanism for moving said members, said mechanism including two screws coupled with one of said members, said two screws spaced with said member for moving said member upon rotation of said screws;

a sprocket coupled with each screw;

a transmission belt or chain coupled with said sprockets, at least one handle coupled with one of said screws for rotating said screws, at least one clutch coupled with at least one screw for limiting clamping pressure on the workpiece, and said clutch enabling rotation of one screw with respect to the other screw so that irregular workpieces may be clamped between said members and said handle enabling clamping of a workpiece by rotation with one hand of an operator; and

a guard for covering said transmission belt or chain, said guard coupled with said frame; and

said handle including a hub, a straight portion extending from said hub, a curved portion extending rom said straight portion, and a knob extending from said curved portion for enabling rotating of said handle.

43. The work bench according to Claim 42, wherein said clutch being self actuating.

44. The work bench according to Claim 42, wherein said clutch includes a spring and a detent in said sprocket.

45. The work bench according to Claim 42, wherein each screw includes a clutch.

46. The work bench according to Claim 42, wherein each screw includes a handle.

47. The work bench according to Claim 42, wherein said guard includes at least one tensioning member unitarily formed with and extending from said guard.

48. The work bench according to Claim 42, wherein said guard includes at least one alignment member to maintain alignment of the belt or chain on the sprocket.

49. The work bench according to Claim 42, wherein a biasing member being associated with said belt or chain for eliminating slack in said belt or chain.

50. The work bench according to Claim 49, wherein the biasing member is a spring which biases both a leading and trailing portion of the belt or chain.

51. The work bench according to Claim 47, wherein said guard includes two tensioning member.

52. The work bench according to Claim 48, wherein said guard includes two pair of alignment members each pair sandwiching a tensioning member.

53. The work bench according to Claim 42, wherein said curved portion has a truncated U-shape with one end coupled with said straight portion and said knob extends from the other end of said curved portion.

54. The work bench according to Claim 53, wherein said hub has a desired height, said straight portion has a height less than said hub and said curved portion having a height greater than said hub.

55. The work bench according to Claim 54, wherein in an end of said curved portion and a side of said straight portion are continuous forming a planar portion.

56. The work bench according to Claim 55, wherein a connecting member extended from said hub and is unitary with said straight and curved portions.

57. The work bench according to Claim 56, wherein said handle is an injection molded plastic material.

58. The work bench according to Claim 42, wherein one handle has a different configuration identity that only one handle need be rotated to drive said screws.

Fig-1

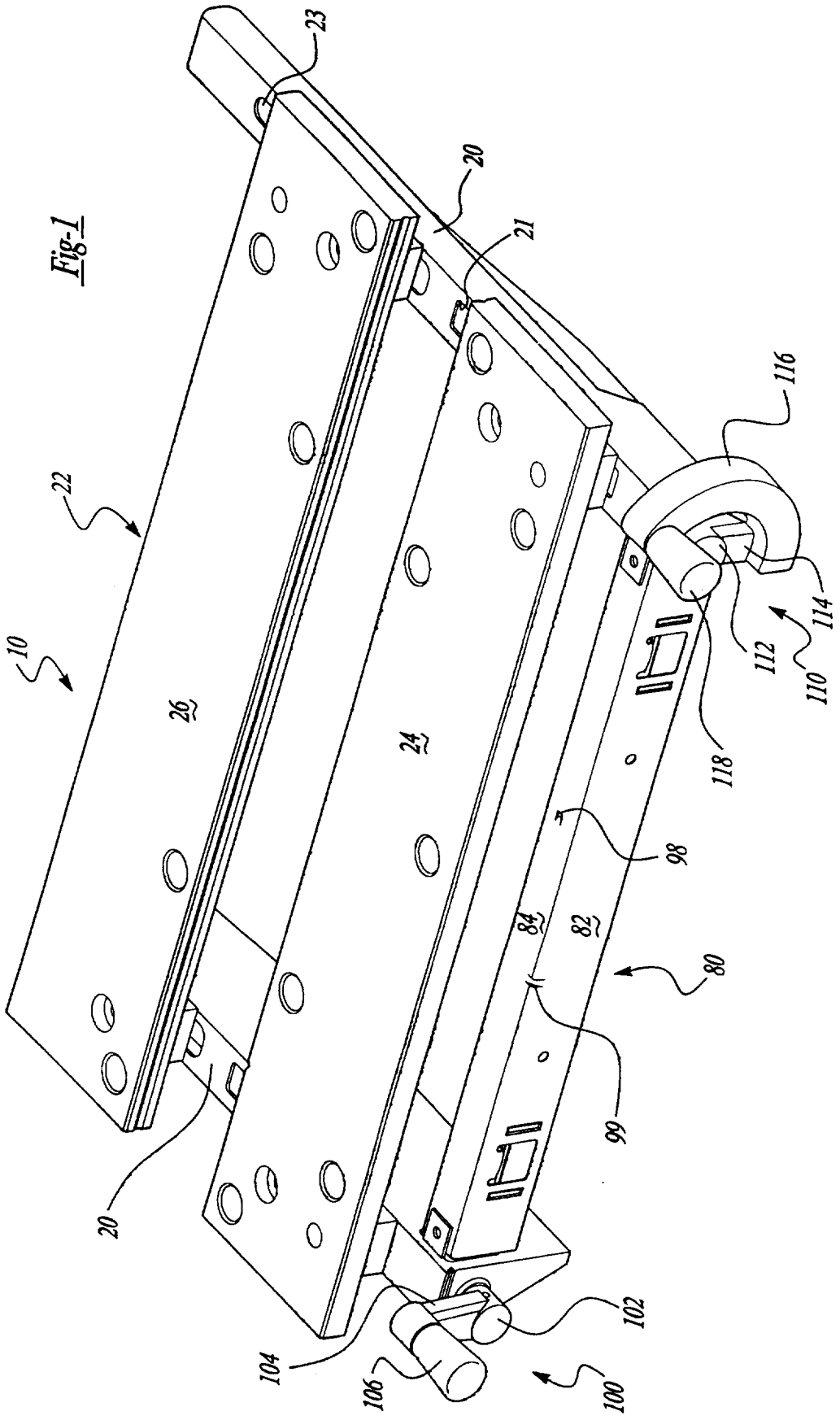
23
20
21
116
22
10
26
24
112
114
110
118
98
84
82
80
99
20
102
104
106
100

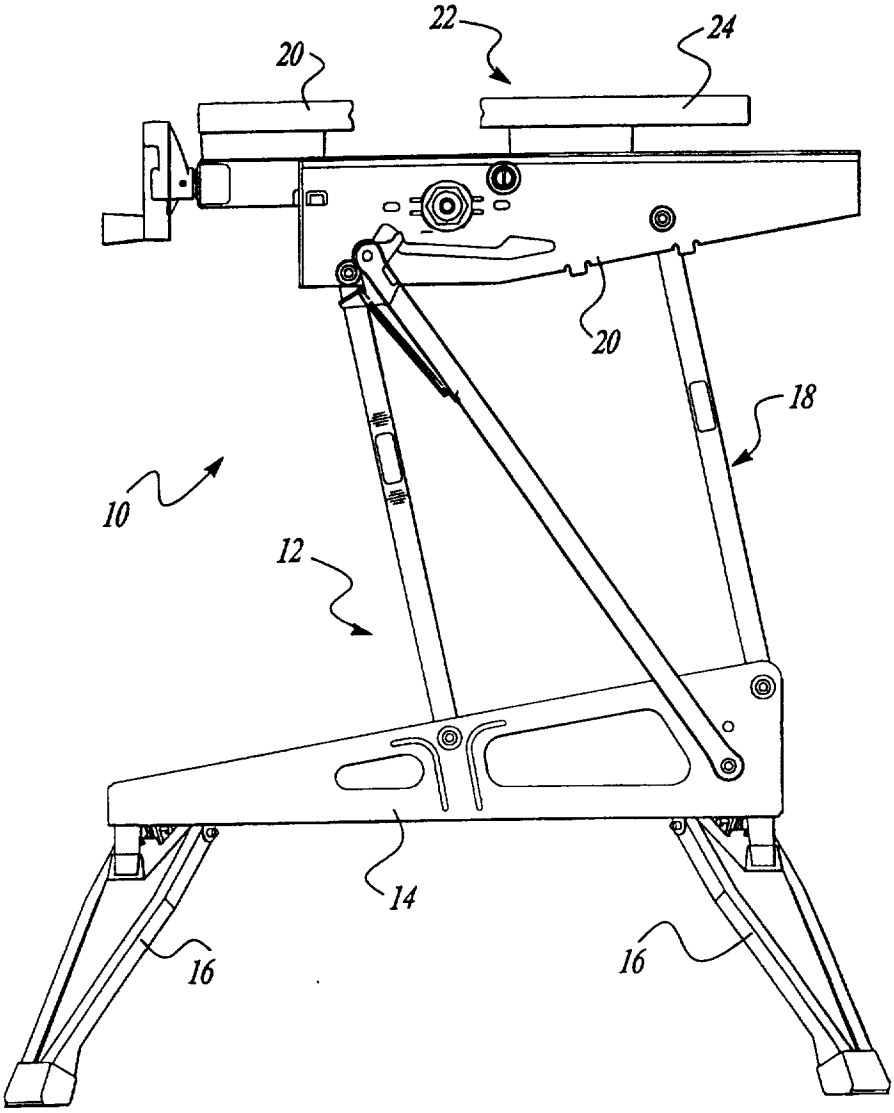
22
24
20
20
18
10
12
14
16
16

Fig-2

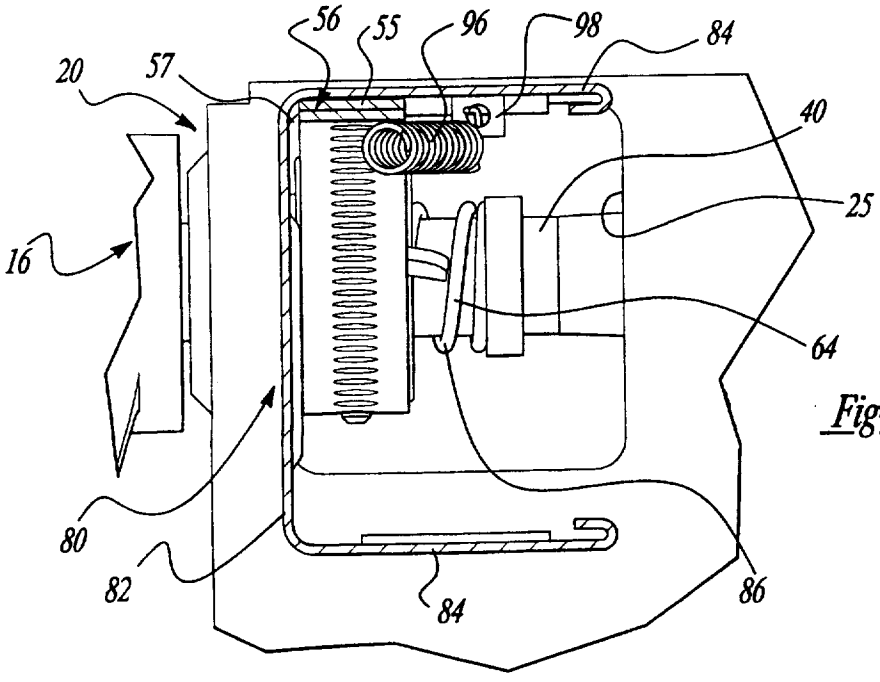
56
55
96
98
84
20
57
40
25
16
64
80
82
84
86

Fig-10

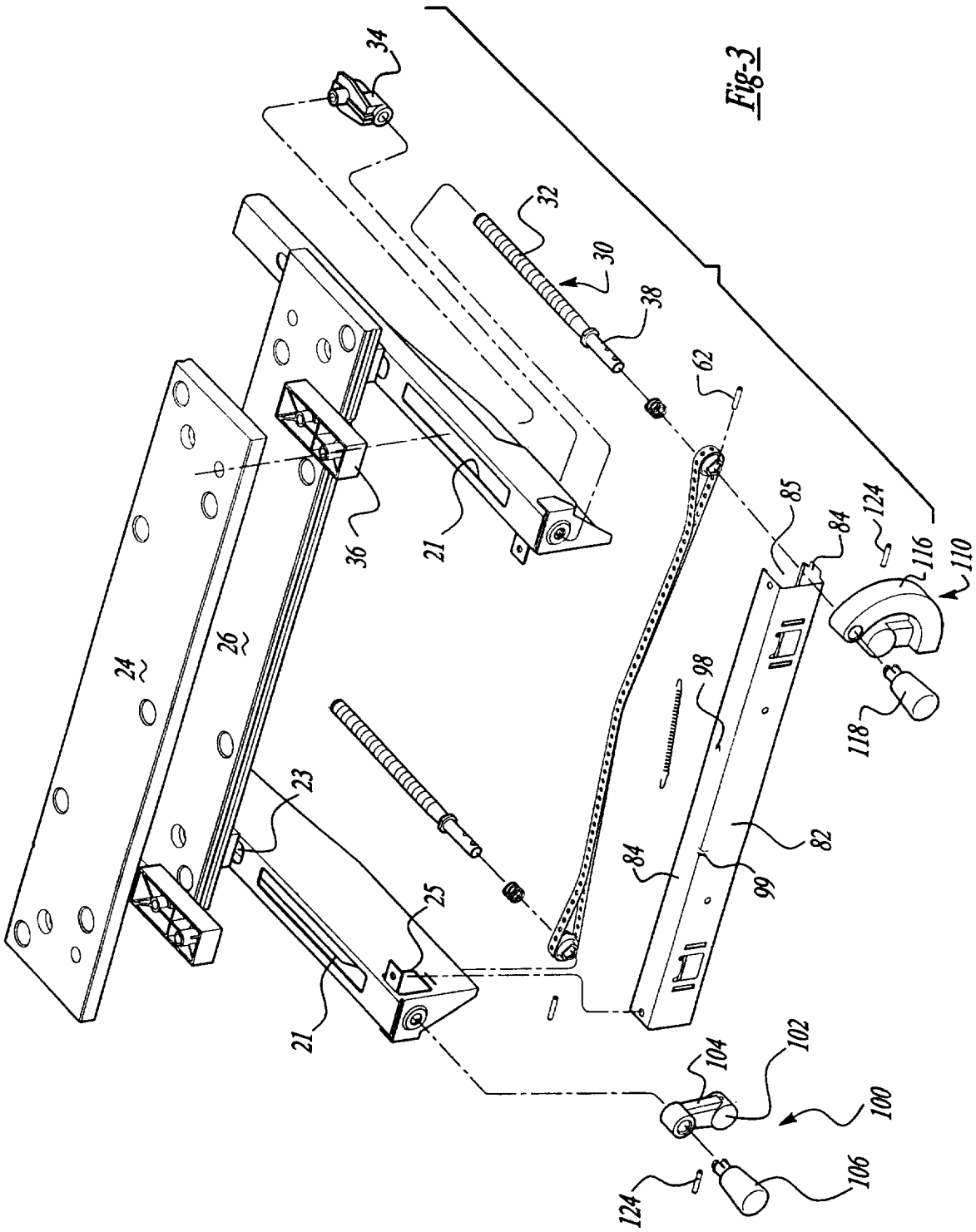
34
32
30
38
62
85
84
124
116
110
118
98
82
99
84
36
21
24
26
23
25
21
104
102
100
106
124

Fig-3

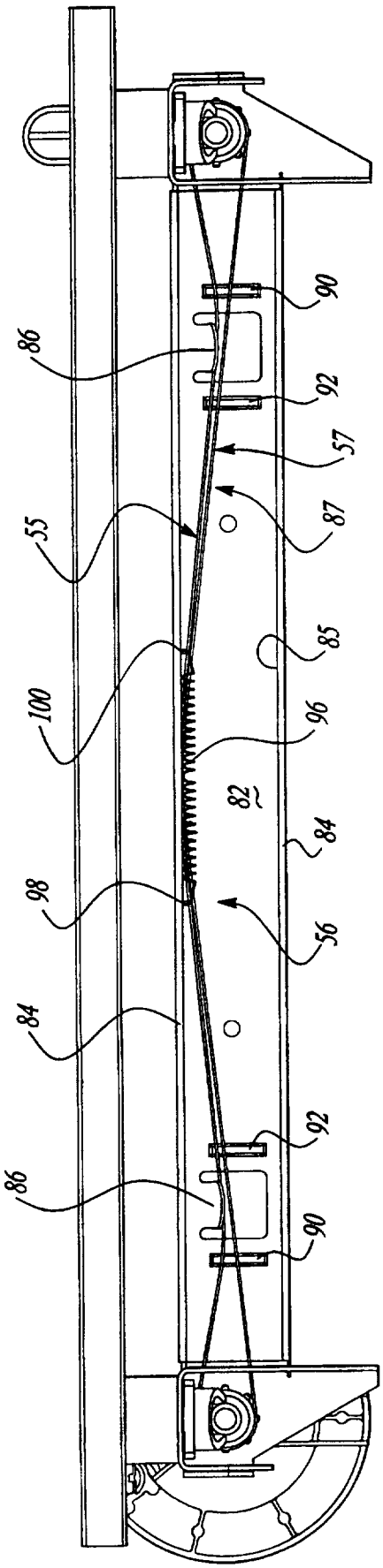

Fig-4

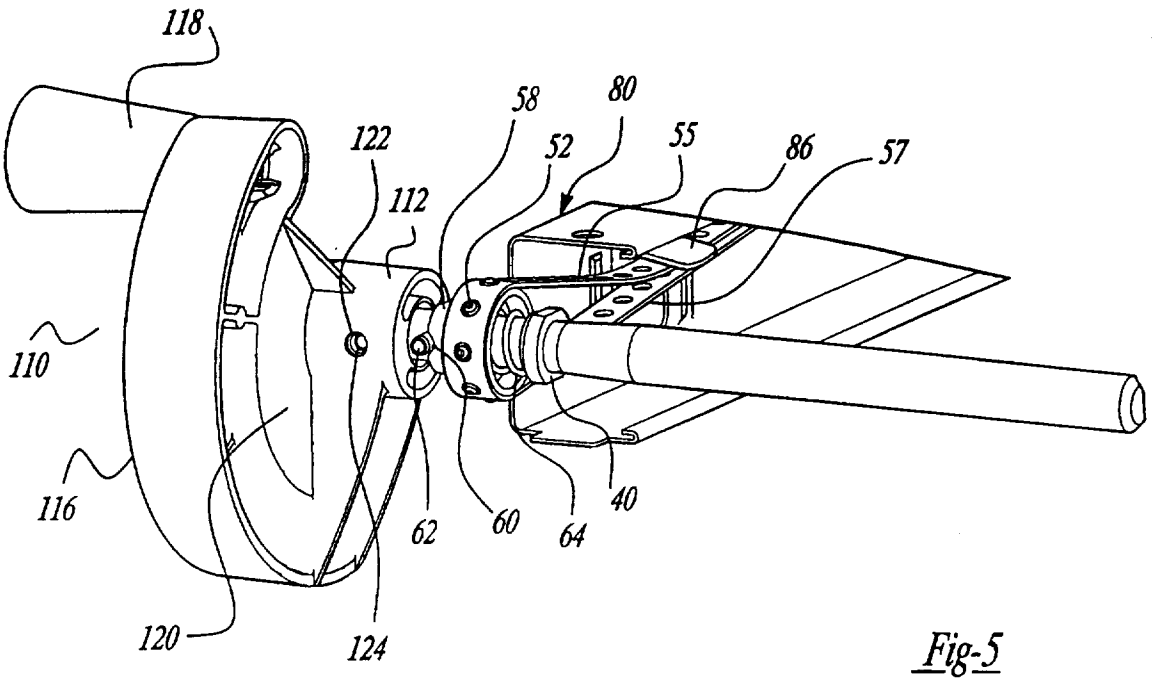
118
122
58
80
52
55
86
57
112
110
116
62
60
64
40
120
124

Fig-5

Fig-6

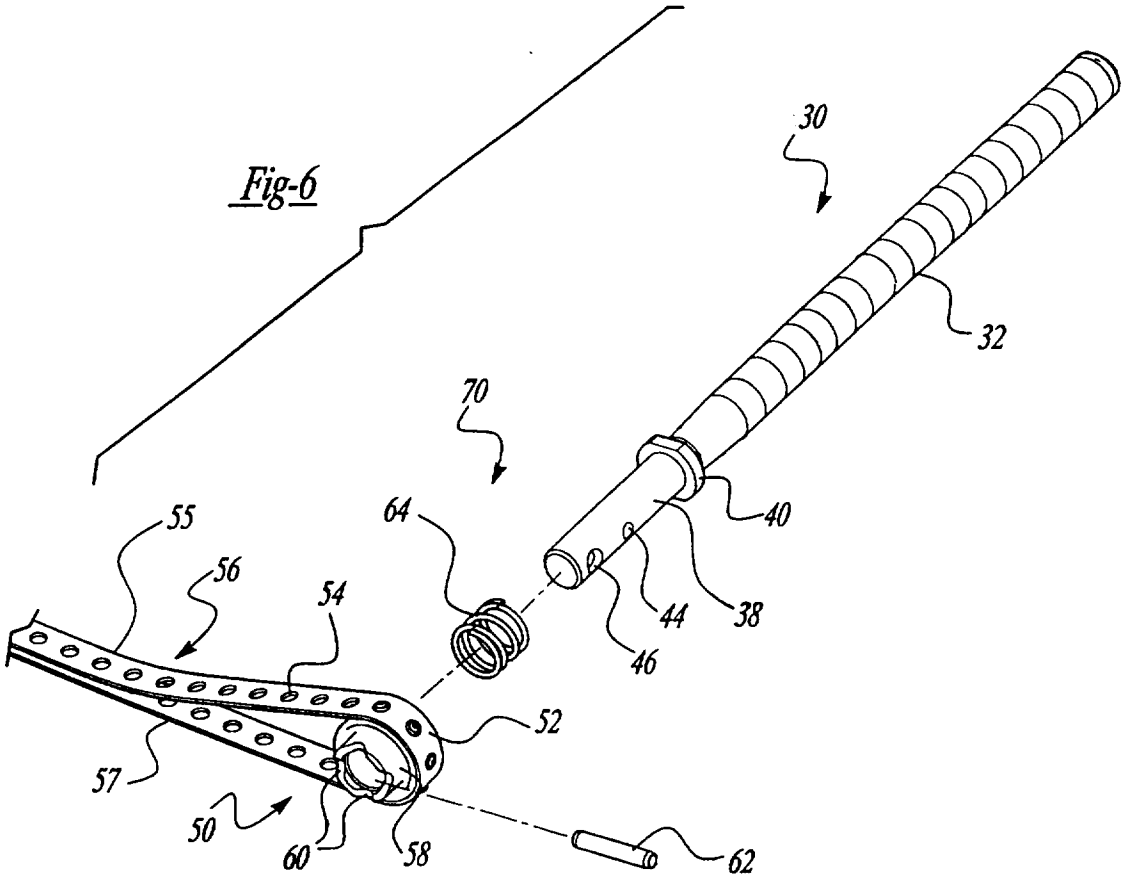
30
32
70
55
64
40
56
54
44
38
46
52
57
50
60
58
62

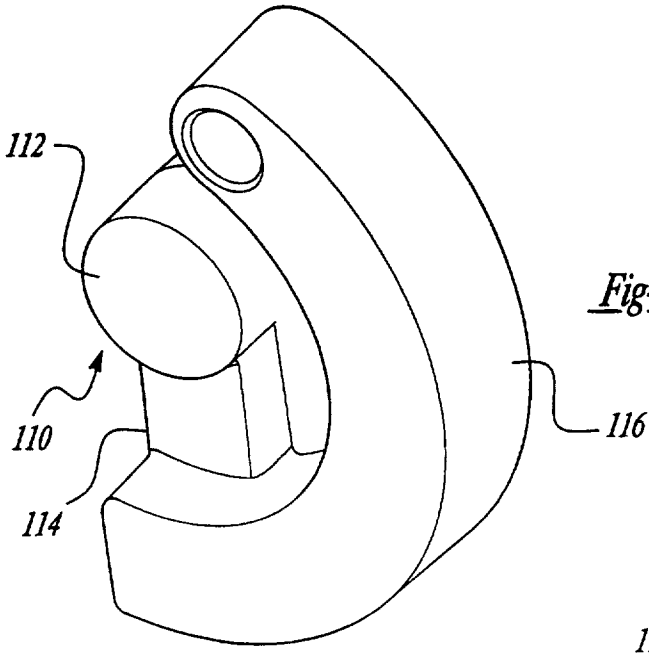

Fig-7

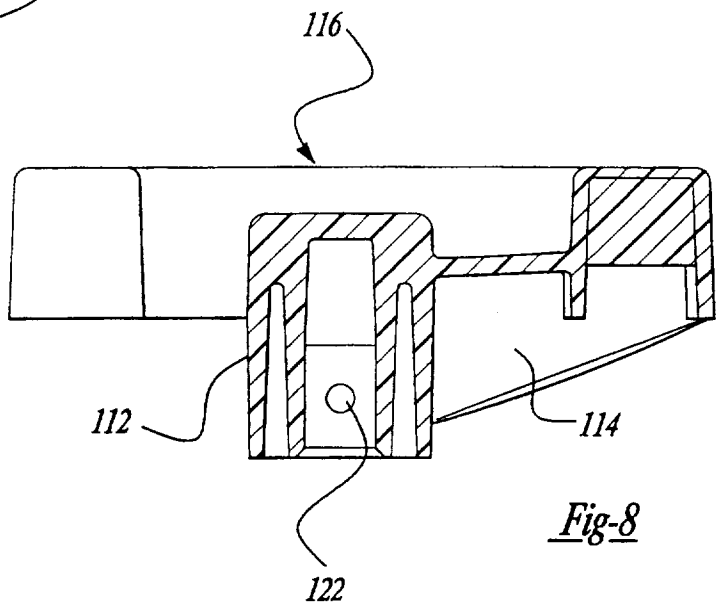

Fig-8

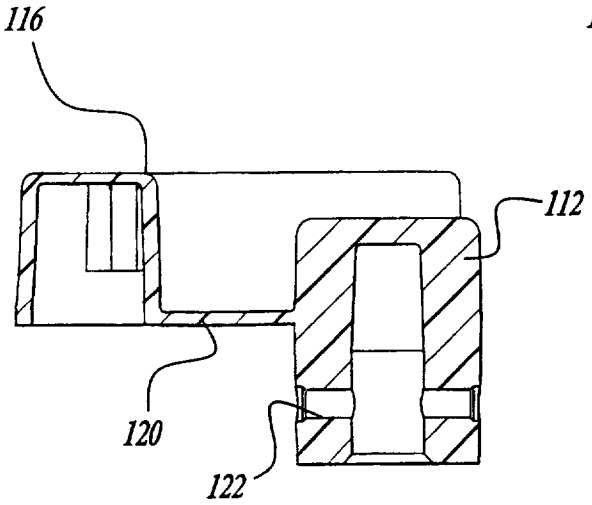

Fig-9

INTERNATIONAL SEARCH REPORT

International application No.
PCT/US97/13852

A. CLASSIFICATION OF SUBJECT MATTER
IPC(6) :B25B 1/02
US CL :269/139
According to International Patent Classification (IPC) or to both national classification and IPC

B. FIELDS SEARCHED

Minimum documentation searched (classification system followed by classification symbols)

U.S. : 269/139, 329,221,222,223,244,246,250-253; 81/52.4A; 74/608,545,543,557; 474/144-147

Documentation searched other than minimum documentation to the extent that such documents are included in the fields searched

Electronic data base consulted during the international search (name of data base and, where practicable, search terms used)

C. DOCUMENTS CONSIDERED TO BE RELEVANT

Category*	Citation of document, with indication, where appropriate, of the relevant passages	Relevant to claim No.
Y	US 4,265,435 A (STILTZ ET AL) 05 MAY 1981, SEE ENTIRE DOCUMENT.	1 , 2 , 4 , 5 , 6 , 34,35,37-39, AND 41
Y	US 4,046,364 A (COOPE ET AL) 06 SEPTEMBER 1997, SEE ENTIRE DOCUMENT.	1,2,4,5,6,34,35,37-39,AND41
Y	US 5,284,331 A (LEE ET AL) 08 FEBRUARY 1994, SEE ENTIRE DOCUMENT.	6
Y	US 2,121,080 A (GALKIN) 21 JUNE 1938, SEE ENTIRE DOCUMENT.	25,26
X	US 583,144 A (FARMER) 25 MAY 1897, SEE ENTIRE DOCUMENT	19-22

[X] Further documents are listed in the continuation of Box C. [ ] See patent family annex.

* Special categories of cited documents:

"A" document defining the general state of the art which is not considered to be of particular relevance

"E" earlier document published on or after the international filing date

"L" document which may throw doubts on priority claim(s) or which is cited to establish the publication date of another citation or other special reason (as specified)

"O" document referring to an oral disclosure, use, exhibition or other means

"P" document published prior to the international filing date but later than the priority date claimed

"T" later document published after the international filing date or priority date and not in conflict with the application but cited to understand the principle or theory underlying the invention

"X" document of particular relevance; the claimed invention cannot be considered novel or cannot be considered to involve an inventive step when the document is taken alone

"Y" document of particular relevance; the claimed invention cannot be considered to involve an inventive step when the document is combined with one or more other such documents, such combination being obvious to a person skilled in the art

"&" document member of the same patent family

Date of the actual completion of the international search
06 OCTOBER 1997

Date of mailing of the international search report
17 NOV 1997

Name and mailing address of the ISA/US
Commissioner of Patents and Trademarks
Box PCT
Washington, D.C. 20231
Facsimile No. (703) 305-3230

Authorized officer
for ROBERT C. WATSON
Sheila Veney
Paralegal Specialist
Group 3200
Telephone No. (703) 308-1148

Form PCT/ISA/210 (second sheet)(July 1992)*

INTERNATIONAL SEARCH REPORT

International application No.
PCT/US97/13852

C (Continuation). DOCUMENTS CONSIDERED TO BE RELEVANT

Category*	Citation of document, with indication, where appropriate, of the relevant passages	Relevant to claim No.
X	US 2,331,588 A (WOODSON) 12 OCTOBER 1943, SEE ENTIRE DOCUMENT	28