May 28, 1935. J. VON ISSENDORFF ET AL 2,003,023

MERCURY VAPOR OR NOBLE GAS RECTIFIER WITH ARC CONTROL

Filed Oct. 13, 1931

Fig. 1.

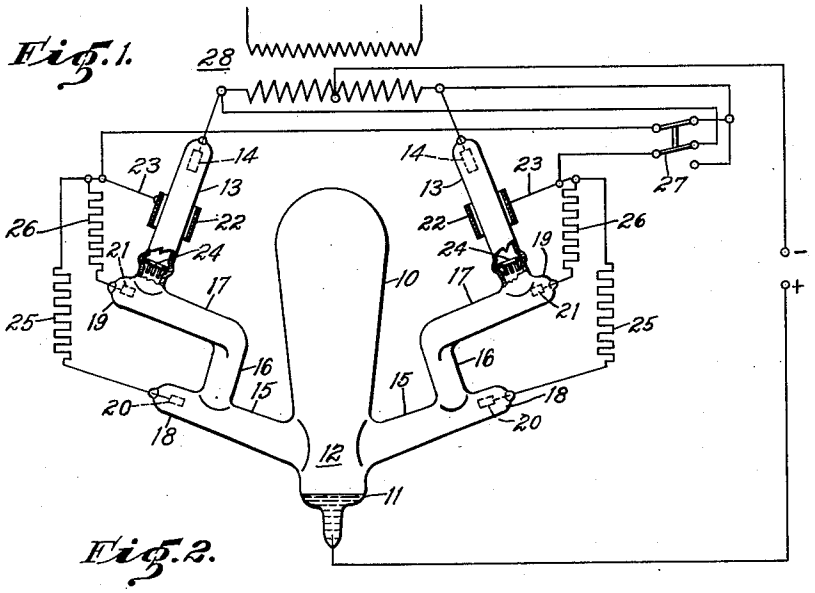

Fig. 2.

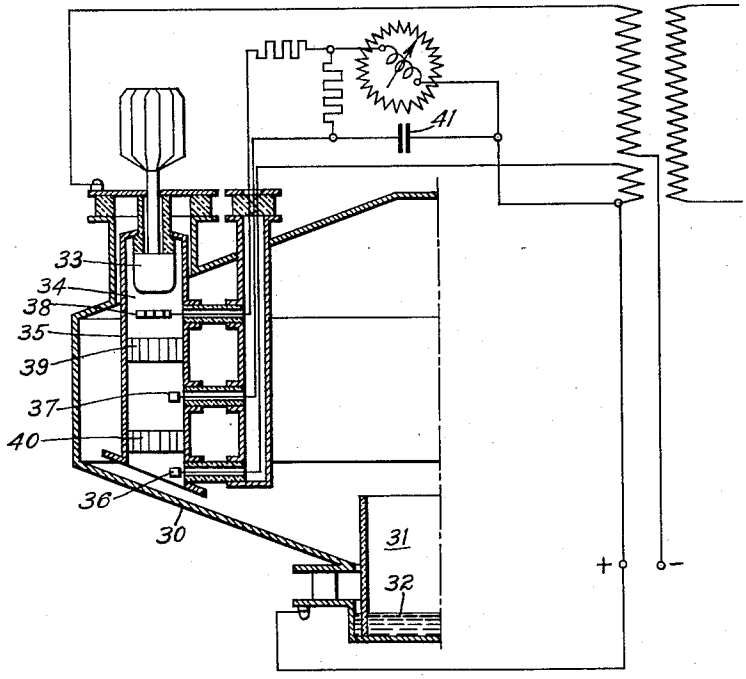

WITNESSES:
R. S. Williams
Chas. C. Groome

INVENTORS
Jurgen von Issendorff
and Fritz Netzsch
BY F. W. Lyle
ATTORNEY

Patented May 28, 1935

2,003,023

UNITED STATES PATENT OFFICE

2,003,023

MERCURY VAPOR OR NOBLE GAS RECTIFIER WITH ARC CONTROL

Jürgen von Issendorff, Berlin-Siemensstadt, and Fritz Netzsch, Berlin-Charlottenburg, Germany, assignors to Westinghouse Electric and Manufacturing Company, a corporation of Pennsylvania

Application October 13, 1931, Serial No. 568,580
In Germany October 16, 1930

4 Claims. (Cl. 175—354)

Our invention relates to electrical discharge devices and it has particular relation to metal vapor rectifiers in which there is the ignition of an arc from a mercury pool cathode to an anode.

An object of our invention is to eliminate the erratic starting of arc-discharge rectifiers.

Another object is to prevent any inequalities in the control characteristics of a rectifier.

More specifically stated, it is an object of our invention to provide one or more auxiliary anodes in the arc path of each main anode whereby the ignition of each individual anode arc is effected in a step by step or cascade manner by the application of a positive voltage to the auxiliary anodes. These auxiliary anodes are in addition to the control or grid element, if such element is present in the device.

Other objects of our invention will become evident from the following detailed description taken in conjunction with the accompanying drawing, in which:

Figure 1 is a view, partly in section and partly in elevation, of a glass rectifier and a diagrammatic circuit therefor incorporating the invention.

Fig. 2 is a view, partly in cross section and partly in elevation, of a portion of a metal tank rectifier and circuit therefor incorporating the invention.

The ignition of an anode arc depends, not only on the voltage curve of the main anodes and on their cooperating control grids, if these are used, but, in a very essential degree, on the other operating conditions of the rectifier. In general, the arc will be ignited more easily if the rectifier is loaded by a very heavy current. Ignition is made more difficult, on the other hand, if during the operation, non-noble gases are liberated which, as sometimes happens, will be reabsorbed at low loads or when the rectifier is deenergized.

In mercury vapor rectifiers there occurs the further drawback that the vapor pressure in the rectifier may vary between very wide limits, say between .001 and one millimeter of mercury column and thus may greatly influence the ignition of the anode arc. With the same load current, ignition becomes more difficult the higher the vapor pressure.

The result of these different influences is that the momentary voltage at which the cooperating main anode is ignited does not remain constant but usually varies so quickly that inequalities in the control characteristic of the rectifier will occur. Thus the condition may occur that, upon energizing the control means for the control voltages in such a sense as to tend to cause an increase in the load current of the rectifier, the current will initially increase only slightly. Then it will jump quickly to a much higher value and only thereafter will it increase uniformly up to the maximum current value of the rectifier. Such unevenness can be avoided according to our invention if a bridge of one or more auxiliary anodes is located in front of each grid which will conduct the arc step by step but without appreciable time delay from the cathode up to the vicinity of the cooperating control grid. Such control grids should be completely disassociated from the effect of the arcs of the other main anodes already existing in the casing if more than one main anode is in the rectifier.

Even in high voltage mercury arc glass rectifiers without grids, one or all of the anodes sometimes fail to start or start late on each forward half cycle. In glass bulb rectifiers, this failure to start promptly is probably due to negative charges accumulating on the glass walls of the relatively long, narrow bent anode arms. These negative charges act as a grid interfering or stopping the normal functioning of the anode. Our invention contemplates using one or more auxiliary anodes in these long narrow bent anode arms instead of in the cathode compartment as is the case in the prior art. These auxiliary anodes will conduct the arc promptly in a step by step manner to the main anode.

In Fig. 1 is disclosed a metallic mercury vapor rectifier having a container 10 with a mercury pool 11 in the cathode compartment 12. The container also has one or more anode compartments 13 with the anodes 14 therein. The cathode compartment 12 communicates with the anode compartment 13 by one or more long narrow and preferable bent arms such as the arms 15, 16 and 17, disclosed on the drawing. The first arm 15 preferably has an extension 18 extending slightly beyond its connection with the arm or tube 16. Likewise, the arm or tube 17 has an extension 19 slightly beyond its opening into the anode compartment 13. Auxiliary anodes 20 and 21 are placed in these extensions preferably adjacent to the opening extending towards the anode compartment.

The arms 15, 16 and 17 and a major portion of the anode compartment 13 form the arc path from the cathode compartment 12 to the main anode 14. If desired, a grid 22 may be placed to control the starting of the arc between the cathode and the main anode. This grid 22 is preferably in the form of a tubular member sur-

rounding the anode compartment adjacent to the main anode 14. An exterior connection 23 makes the grid controllable according to the conditions of the external circuit. Uncontrollable grids 24 may be placed adjacent to the entrance of the anode compartment and also at other places along the communicating arms. Such uncontrolled grids should not, however, be placed between the first auxiliary anode 20 and the cathode 11.

Resistances 25 and 26 may connect the auxiliary anodes 20 and 21 with the connection 23 to the control voltage for the cooperating grid 22. The switch 27 permits the connection of the auxiliary electrodes 20 and 21 and grid member 22 to the secondary member of a transformer 28 to which the main anodes 14 are also connected.

The switch 27 is closed to start the device and this connects a suitable voltage to the auxiliary electrodes 20 and 21 and the grid 22. An arc is ignited between the cathode 11 and the auxiliary anode 20. A blast of ionized gas travels up the bent arms 16 and 17 and this causes the arc to step up to the auxiliary anode 21. The ionized gas passes through the grid 24 into the anode compartment 13 and the arc is then stepped up to the main anode 14. This step by step advancement of the arc avoids the erratic starting of the device so often present in metallic vapor rectifiers.

It is, of course, apparent that the number, shape and arrangement of the various elements and circuit connections thereto may be changed as the cycle only represents one embodiment of the invention.

Fig. 2 illustrates a preferred embodiment of the invention as applied to metal tank rectifiers. The metal container 30 has a cathode compartment 31 therein preferably containing a mercury pool 32. There is also a main anode 33 in anode compartment 34 formed by anode protecting tube 35. One or more, and preferably two auxiliary anodes 36 and 37 are located in the path of the arc from the cathode to the anode and preferably these are located within the communicating passageway to the main anode. A control grid 38 is preferably located adjacent a main anode 33. An uncontrolled grid 39 preferably separates the control grid 38 from the auxiliary anode 37 and a similar uncontrolled grid 40 separates the auxiliary anodes 36 and 37. The rectifier may have as many sets of main anode grids and auxiliary anode arrangements as desired to cooperate with the cathode 32.

The auxiliary anode located in the path of the arc and preferably that one 36 lying nearest to the cathode 32 may be connected to such uncontrolled alternating current voltages as are substantially the same in phase as the voltage of the corresponding main anode. This will have the result that on the cathode side of the individual arc paths, there will be continuously a predetermined ionization condition which is independent of the total current load of the rectifier. The ignition conditions for the individual anode arcs will then be more nearly equalized.

The arc between the auxiliary anode 36 and the cathode 32 will be stepped up to the auxiliary anode 37 and then to the main anode 33 in a manner similar to the step by step method already described in connection with Fig. 1.

To prevent the cession of the ignition of individual anode arcs which may be as disturbing in operation as preignition, the current in the controlled auxiliary anodes should be relatively large and this would ordinarily mean a loss of energy. But as it is a question only of an initial current peak, in ignition, which will last a very short time only until the cooperating main anodes receive the arc current, several of the controlled auxiliary anodes located in the path of each anode arc may, in accordance with the present invention, be connected through a capacitance 41 with the rectifier anode.

The invention of the step by step ignition of the discharge is also applicable to noble gas electric-discharge devices or rectifiers in which there is ignition of an arc or discharge from a ready-to-operate cathode. This cathode may be either heated artificially to the electron emission state or may be excited by an auxiliary discharge or arc. The discharge or arc to the anode at a desirable high positive potential, in these noble gas rectifiers, can be prevented or hindered by the application of a sufficiently negative voltage to a grid located between the two electrodes.

Although we have shown and described certain specific embodiments of our invention, we are fully aware that many modifications thereof are possible. Our invention, therefore, is not to be restricted except insofar as is necessitated by the prior art and by the spirit of the appended claims.

We claim as our invention:

1. A rectifier comprising a container, a cathode compartment in said container, a cathode in said compartment, a second compartment communicating with said cathode compartment and providing an arc path therefrom, a main anode in said second compartment, an auxiliary anode adjacent said arc path outside said cathode compartment and a controllable and an uncontrollable grid between said auxiliary anode and said main anode.

2. A rectifier comprising a container, a cathode compartment in said container, a cathode in said compartment, a second compartment communicating with said cathode compartment and providing an arc path therefrom, a main anode in said second compartment, an auxiliary anode adjacent said arc path outside said cathode compartment, a grid between said auxiliary anode and said main anode and a resistor connecting said grid and said auxiliary anode.

3. A rectifier comprising a container having a cathode compartment, a cathode in said compartment, an arm having a lateral entrance to said cathode compartment, an auxiliary anode in said arm, a second arm having a lateral entrance into said first-mentioned arm, a second auxiliary anode in said second arm, an anode compartment having a lateral entrance to said second arm and a main anode in said anode compartment.

4. A rectifier comprising a container, a cathode compartment in said container, a cathode in said compartment, a tubular arm projecting from said compartment, an auxiliary electrode adjacent the end of said arm, a second arm projecting laterally from said tubular arm near said auxiliary electrode, a second auxiliary electrode in said second arm, a third arm projecting laterally from said second arm, and an anode in said third arm remote from its junction with said second arm.

JÜRGEN VON ISSENDORFF.
FRITZ NETZSCH.