W. O. BECK.

ELECTROMAGNETIC DEVICE.

APPLICATION FILED OCT. 21, 1919.

1,379,242. **Patented May 24, 1921.**

Fig. 1.

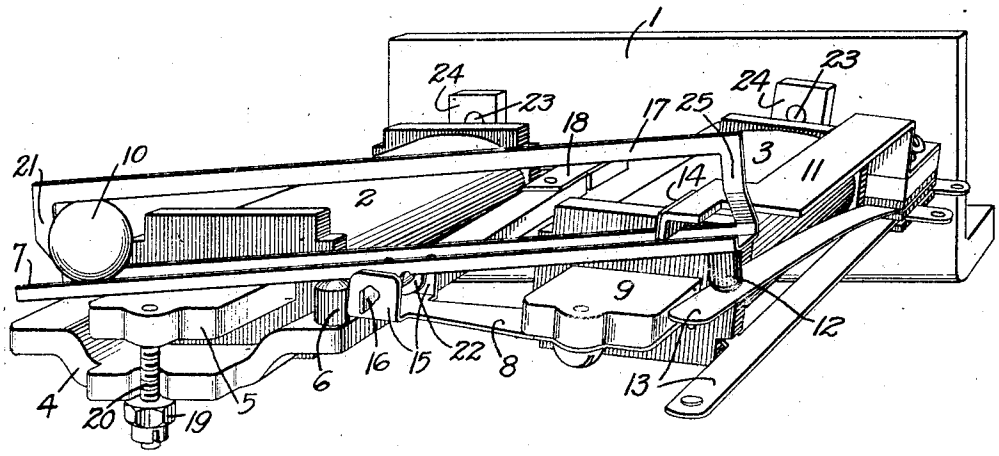

Fig. 2.

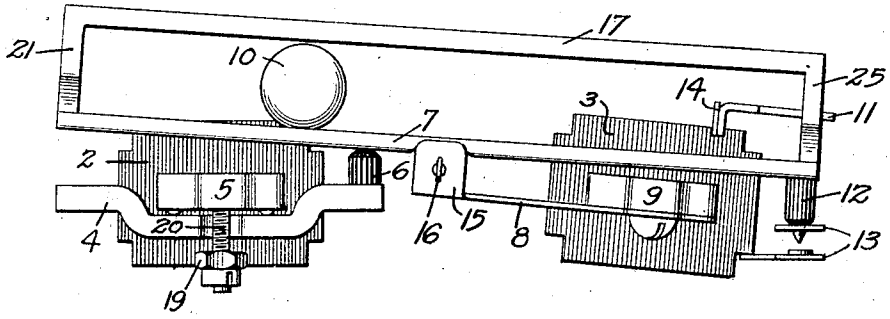

Fig. 3.

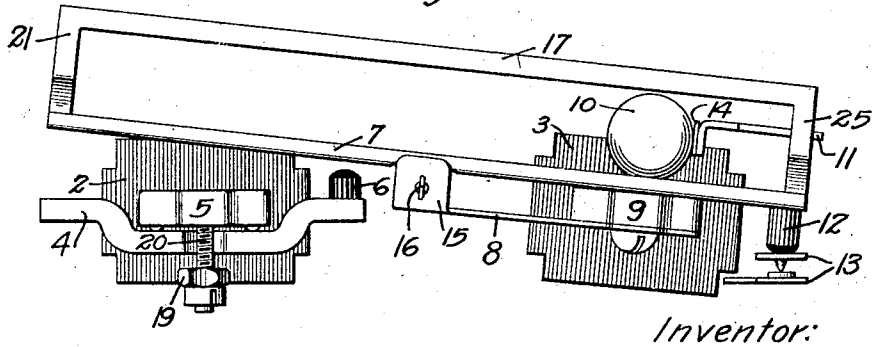

Inventor:
William O. Beck.
by Jas. A. Palmer Atty.

UNITED STATES PATENT OFFICE.

WILLIAM O. BECK, OF RIDGEFIELD, NEW JERSEY, ASSIGNOR TO WESTERN ELECTRIC COMPANY, INCORPORATED, OF NEW YORK, N. Y., A CORPORATION OF NEW YORK.

ELECTROMAGNETIC DEVICE.

1,379,242. Specification of Letters Patent. Patented May 24, 1921.

Application filed October 21, 1919. Serial No. 332,215.

To all whom it may concern:

Be it known that I, WILLIAM O. BECK, a citizen of the United States, residing at Ridgefield, in the county of Bergen, State of New Jersey, have invented certain new and useful Improvements in Electromagnetic Devices, of which the following is a full, clear, concise, and exact description.

This invention relates to electromagnetic devices or relays, and more particularly to a slow operating device of this character.

To meet certain conditions it is often required, especially in signaling and telephone circuits, that a relay or electromagnetic device be slow in operation as compared with another, in order to insure the latter sufficient time to complete its function before the circuit, which the former controls, is completed.

It has heretofore been proposed to retard the operation of an electromagnet by placing a copper jacket or coil about the core or by the use of various spring arrangements and mechanical retarding instrumentalities such as dash pots and the like. The present invention, however, provides a simple and efficient construction without the use of short circuiting windings or sleeves or dash pots or complicated spring arrangements.

This invention provides a structure wherein the armature which operates the usual circuit controlling contacts is normally outside of the sphere of action of the electromagnet which finally operates it. Auxiliary means are provided to place the armature and the magnet in operative relation, which means is set in operation when the magnet is energized. The time interval required to place the armature in operative relation to the magnet measures the amount of delay in the operation of the circuit controlling contacts.

The invention further provides a track or runway upon which the armature rolls or slides into the sphere of action of the electromagnet which finally causes the armature to operate the circuit controlling contacts.

These, and other features not specifically mentioned above, will more clearly appear in the following specification and the annexed drawing, in which Figure 1 shows an end elevation of a relay embodying this invention; Fig. 2 shows the relay in operation and Fig. 3 shows the completed operation of the relay with the contact springs closed.

The relay shown on the drawing comprises an upright or vertical mounting plate 1 on which are mounted two electromagnetic coils 2 and 3 which extend in a horizontal position. These coils are supported by their cores 5 and 9, which are flat punched pieces, and extend parallel to each other and at right angles to the mounting plate. The cores are secured to the mounting plates by means of screws 23 passing through the mounting plate and threaded into two offsets 24 on each of the cores. As will be seen from an inspection of the drawings, the core 5 lies in a horizontal plane while the core 9 lies in a plane at an angle to the horizontal. The purpose of this will be explained later.

The ends of the cores nearest the mounting plate are wide and extend beyond the coils. The armature 4 is formed from a substantially U-shaped punching of magnetic material, comprising a yoke piece and two backwardly extending arms. The two extremities of these arms are secured to resilient sheet metal arms 18. The arms 18, only one of which is shown, project from and are integral with a yoke piece, not shown. By means of the yoke piece of this sheet metal hinge the armature 4 is mounted on the backwardly extended portion of the core 5. The spacing between the core 5 and armature 4 is governed by a nut 19 on a set screw 20, which screw is secured to the front end of the core and extends down through the armature.

To the front end of core 9 is secured an arm 8 which extends to a point about midway between the front ends of cores 5 and 9. On the end of this arm are formed two ears 15 extending upward and at right angles to the arm and afford a bearing for a pivot pin 16. Upon the pin is pivoted a runway. This runway is formed from a sheet of nonmagnetic material and comprises a trough like track 7, at the ends of which are two extensions 21 and 25 that are bent upward and to the center of the track and which support a strip 17 that runs along above the center of the track; from the bottom of the track 7 and at the middle are punched two ears 22 that extend downward and are pierced by the pivot pin 16, thereby afford-

ing a bearing upon which the runway is pivoted.

On this runway is mounted a ball 10 of magnetic material that is to act as an armature for electromagnetic coil 3. The strip 17 serves to hold the ball 10 on the track 7. The extension 21 serves as a stop for the ball 10.

An arm 11 is mounted on the extension at the back of the core 9 on the right side of coil 3 and extends parallel with the coil and its core 9, to a point between the track 7 and strip 17 just to the left of the extension 25. There is an extension, on the left side of the front end of the arm, that is bent down and on which is mounted a piece of non-magnetic material 14. This forms a stop for the ball 10 on the right side.

There are also a set of contact springs 13 mounted on the extension at the base of the core 9 on the right side of coil 3. These contact springs extend parallel with the core 9 to a point below the right end of track 7.

There is a projection 12 of insulated material secured to the bottom of track 7 at the extreme right end. This rests upon the top spring of the set of contact springs, and when the track is tilted to the right, serves to close the contact on the springs. When there is no current passing through the coil, the armatures will not be attracted to the cores and the upward pressure of the springs will cause the runway to tilt to the left and the ball 10 to remain normally at the left end of the runway. A similar projection 6 of insulated material is secured to the armature 4, the top of said projection being normally in contact with runway 7 near the pivoting point.

The windings of the electromagnets 2 and 3 are arranged in series in an electrical circuit and the following operation takes place when this circuit is closed. With current flowing through the windings of both magnets 2 and 3, and with the track or way in the normal position, as shown in Fig. 1, the armature 4 will be attracted. Since the track or way 7 is of non-magnetic material, the magnetization of the core 9 of the magnet 3 will be then without effect. The operation of the magnet 2 serves, through the instrumentality of the insulating projection 6 on its armature 4, to tilt the track or way, as shown in Fig. 2, and to cause the ball 10 to roll toward the other end of the track. As the ball 10 approaches the stop 14, it enters the magnetic field produced by the core 9 and is attracted thereby. This attraction gradually becomes stronger and reaches its maximum with the ball in contact with the stop 14. When this condition occurs, the magnetic attraction between the core 9 and the ball 10 is sufficient to tilt the track into its lowest right-hand position, as shown in Fig. 3, against the tension of the contact springs 13, thereby closing such contacts by means of the projection 12. It is obvious, however, that before the contacts 13 can be closed, it is necessary first for the armature 4 to act to tilt the track, then for the ball 10 to traverse the entire length of the track and for the track to be further tilted to close the contact springs. Therefore, a time interval is introduced between the closure of the circuit and the operation of the contact springs 13. It is obvious that the time of operation may be varied to suit any special condition by properly choosing the degree to which the track is pivoted.

It will be seen also, by reference to Fig. 3, that the ball 10 can be brought into better magnetic connection with core 9 by having core 9 tilted to the right. This renders the attraction of the ball 10 to the core 9 more positive.

When the current through the coils 2 and 3 is broken, the magnetic influence over armatures 4 and 10 will be removed, and the upward pressure of the springs 13 will cause the runway to tilt to the left, thereby allowing the armature 10 to return to its normal position at the left.

What is claimed is:

1. In an electromagnetic switch, an energizing winding, a core, circuit controlling means, a track transverse to the axis of said core, an armature normally in inoperative relation to said core movable on said track, and means for moving said armature along said track into operative relation to said core to control said circuit controlling means.

2. In an electromagnetic switch, an energizing winding, a core, circuit controlling means, a pivoted track transverse to the axis of said core, an armature normally in inoperative relation to said core movable on said track, means for tilting the track to move the armature into operative relation to said core, to control said circuit controlling means.

3. In an electromagnetic switch, an energizing winding, a core, a pivoted track transverse to the axis of said core, a spherical armature normally in inoperative relation to said core and movable on said track, and means for tilting said track to roll said armature into operative relation to said core, and circuit controlling means operated by said armature.

In witness whereof, I hereunto subscribe my name this 16th day of October, A. D. 1919.

WILLIAM O. BECK.