(No Model.) 2 Sheets—Sheet 1.

A. A. PAGE.

LIQUID DOOR CHECK.

No. 590,048. Patented Sept. 14, 1897.

Fig. 1

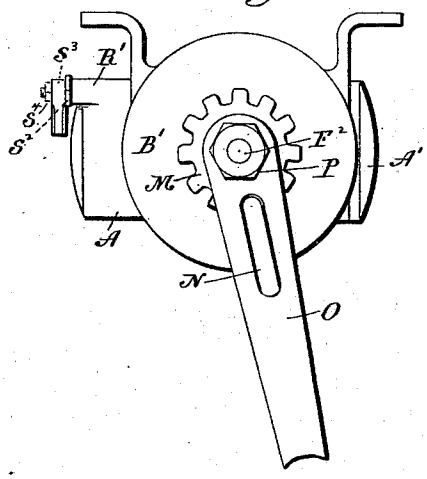

Fig. 2

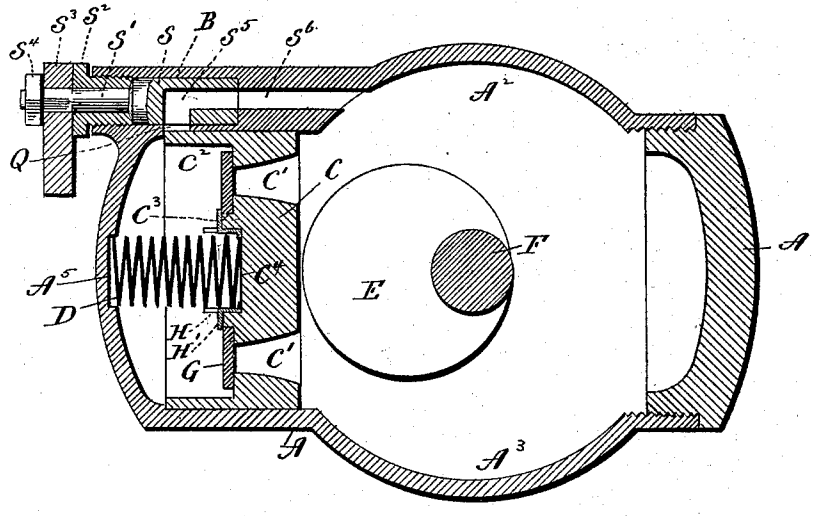

Witnesses
J. F. Shumway
Lillian D. Kelsey.

Albert A. Page.
Inventor.
By Atty's Earle Seymour

THE NORRIS PETERS CO., PHOTO-LITHO., WASHINGTON, D. C.

(No Model.) 2 Sheets—Sheet 2.

A. A. PAGE.

LIQUID DOOR CHECK.

No. 590,048. Patented Sept. 14, 1897.

Fig. 3

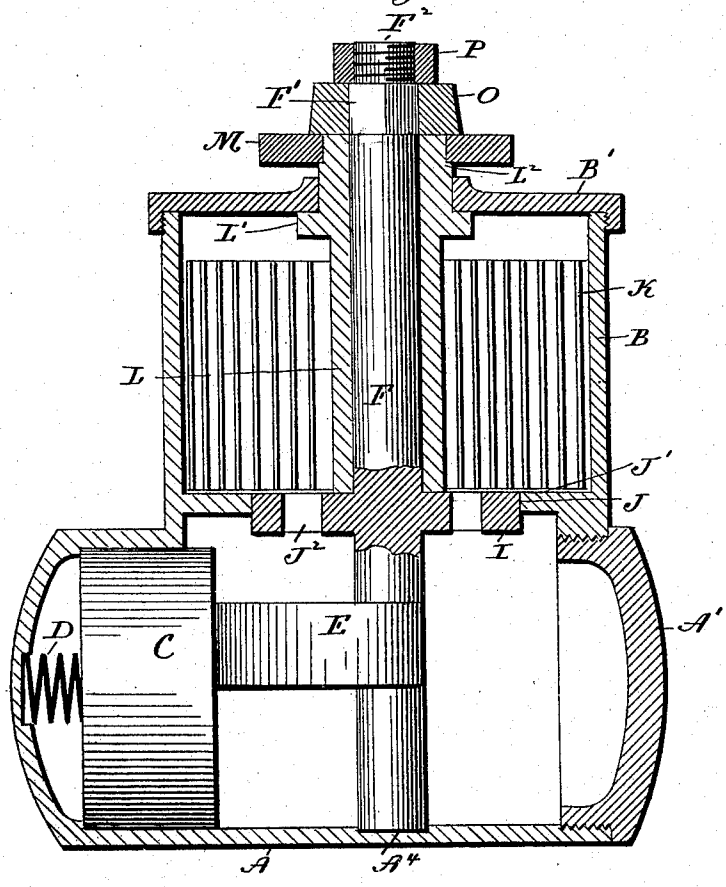

Fig. 4

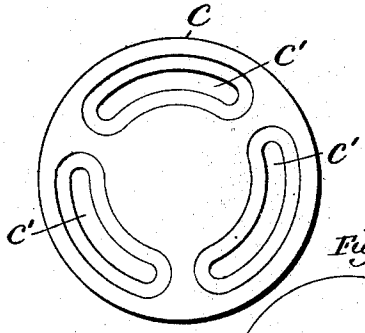

Fig. 5

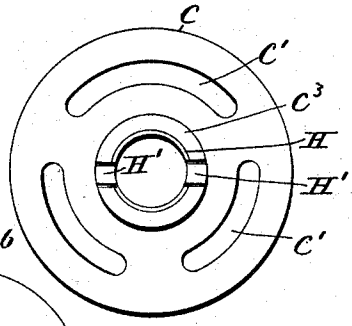

Fig. 7

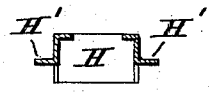

Fig. 6

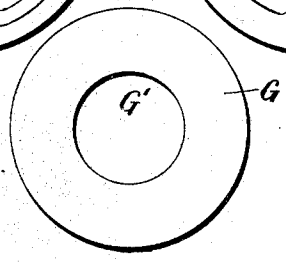

Witnesses.
W. F. Shumway.
Lillian D. Kelsey.

Albert A. Page
Inventor
By Atty's Earle Seymour

THE NORRIS PETERS CO., PHOTO-LITHO., WASHINGTON, D. C.

UNITED STATES PATENT OFFICE.

ALBERT A. PAGE, OF EAST HAVEN, CONNECTICUT, ASSIGNOR TO THE SARGENT & COMPANY, OF NEW HAVEN, CONNECTICUT.

LIQUID DOOR-CHECK.

SPECIFICATION forming part of Letters Patent No. 590,048, dated September 14, 1897.

Application filed May 18, 1896. Serial No. 591,907. (No model.)

To all whom it may concern:

Be it known that I, ALBERT A. PAGE, of East Haven, in the county of New Haven and State of Connecticut, have invented a new Improvement in Liquid Door-Checks; and I do hereby declare the following, when taken in connection with the accompanying drawings and the letters of reference marked thereon, to be a full, clear, and exact description of the same, and which said drawings constitute part of this specification, and represent, in—

Figure 1, a plan view of a door-check constructed in accordance with my invention; Fig. 2, a view of the said check in central horizontal section through the liquid-chamber thereof; Fig. 3, a view of the check in vertical central section through both the spring-chamber and the liquid-chamber; Fig. 4, a detached view of the plunger in outside elevation; Fig. 5, a detached view of the plunger in outside elevation; Fig. 6, a detached plan view of the plate-valve of the plunger; Fig. 7, a detached sectional view of the sheet-metal socket applied to the plunger for holding the spring and plate-valve.

My invention relates to an improvement in liquid door-checks, the object being to provide a compact, convenient, and effective check constructed with particular reference to simplicity and the avoidance of leaking.

With these ends in view my invention consists in a liquid door-check having certain details of construction and combinations of parts, as will be hereinafter described, and pointed out in the claims.

In carrying out my invention I employ a case comprising a fluid-chamber A, having one of its ends closed by a cap A′ and located below and arranged transversely to the spring-chamber B, which is comprised within the same casting and closed at its upper end by a cap B′, the fluid-chamber being considerably smaller in diameter than the spring-chamber and the two chambers being merged into each other, so as to form two corresponding clearance-spaces A^2 A^3, which lead out of the opposite side walls of the fluid-chamber. Within the transversely-arranged fluid-chamber I locate a reciprocating plunger C, which is actuated in one direction by a spiral spring D, interposed between the outer end of the chamber and the outer face of the plunger and actuated in the opposite direction by means of a horizontal cam E, located upon and preferably formed integral with the lower end of the spindle F, which extends downward through the spring and fluid chamber and takes a bearing at its lower end in a shallow recess A^4, formed in the lower side wall of the latter, as clearly shown in Fig. 3. The plunger C is formed, as herein shown, with three large segmental ports C′ C′ C′, which permit the fluid to pass from one side of it to the other. The outer end of the plunger contains a deep circular chamber C^2 (clearly shown in Fig. 2) and receiving a plate-valve G, by means of which the said ports are closed when the plunger is moved outward in the fluid-chamber and away from the spindle. The inner end of the plunger is formed with a central bearing-face which coacts with the cam E before mentioned, the ports aforesaid being located between the said face and the periphery of the plunger and therefore eccentric to the center thereof. The said plate-valve is annular in form, having a large central opening G′, adapting it to fit over an annular shoulder C^3, formed integral with the plunger and located in the bottom of the chamber C^2 thereof. A sheet-metal socket H, set into a recess C^4, leading out of the bottom of the chamber C^2 and inclosed by the said shoulder C^3, is provided with two outwardly-projecting arms H′ H′, which hold the plate-valve in place upon the shoulder C^3, upon which it has sufficient lateral movement to clear the outer ends of the ports C′ sufficiently to permit the fluid to flow freely through the same. The said socket H receives the inner end of the spiral plunger-spring D and retains the same in place, the outer end of the said spring being set into a shallow recess A^5, formed in the outer end of the liquid-chamber A.

The spindle F, before mentioned, is provided with a heavy horizontally-arranged bearing-disk I, which fits into a central circular bearing-opening J, formed in the diaphragm J′, which separates the liquid and spring chambers, the said disk being formed, as shown, with transverse ports J^2, which per-

mit the liquid in the liquid-chamber to flow back and forth into and from the spring-chamber B. The said spring-chamber contains a heavy-coiled mainspring K, the outer end of which is connected with the inner wall of the said chamber, while its inner end is connected in the usual manner with a sleeve L, the inner end of which rests upon the bearing-disk I, before mentioned, while it is furnished near its outer end with an annular bearing-shoulder L′, which bears against the inner face of the spring-chamber cap B′. The said sleeve is provided at its outer end with a hub L^2, which projects through the cap B′ and receives a notched wheel M, which is rigidly secured to the said hub and provides for adjusting the spring K for tension. The notches of the said wheel receive one end of a pawl N, mounted in the inner end of the lever O, the said end of which is formed with a square opening for connection with the squared upper end F′ of the spindle, the extreme upper end of which projects through the said opening and is threaded, as at F^2, for the reception of a nut P, bearing upon the outer face of the said inner end of the lever, which is thus held in place upon the spindle and forced to take a bearing upon the notched wheel M.

When the plunger C is moved from the outer end of the liquid-chamber inward toward the spindle F, the liquid flows freely through the ports C′ of the plunger, past the valve G, and into the outer end of the chamber, but when the plunger is moved outward in the chamber and away from the spindle F the plate-valve G is immediately closed and the liquid forced to find another passage to the opposite side of the plunger and back into the main body of the chamber. For this purpose I provide a port Q, leading laterally out of the outer end of the liquid-chamber into a longitudinally-arranged cylindrical valve-chamber R, formed in an extension R′ of the case and receiving a plug-valve S, constructed with a valve-stem S′ and retained in place by means of a flanged retaining-nut S^2 and furnished with an operating-handle S^3, attached to the outer end of the stem by means of a nut S^4, all as shown in Fig. 2. The said valve is formed with an L-shaped opening S^5, the lateral arm of which coöperates with the lateral port Q and the longitudinal arm of which registers with a longitudinal passage S^6, formed in the extension R′ and opening at its inner end into the clearance-space A^2 and therefore into the liquid-chamber. The said port Q, valve-chamber R, and longitudinal passage S^6 together constitute a by-pass for connecting the outer end of the fluid-chamber A with the main portion thereof around, so to speak, the plunger C.

It will be readily understood that by turning the plug-valve S the virtual size of the port Q may be increased or diminished within the limits set by the size in cross-section of the lateral arm of the passage in the valve. In this way the passage of the liquid from the outer end of the liquid-chamber back into the main portion of the liquid-chamber is controlled. When the door is closed, the plunger is held by the cam E against the tension of the spring D in the position in which it is shown by Fig. 2 and at the limit of its outward movement in the liquid-chamber. Now when the door is opened the cam E clears the plunger, which is moved inward by the spring D, the plate-valve G being opened by the outward pressure of the liquid, which flows freely through the ports C′ C′ into the plunger and into the outer end of the liquid-chamber. When the door is fully open, the plunger will have reached the limit of its inward movement, in which it will be arrested by its engagement with that portion of the cam which is coincident with the spindle F. Now when the door begins its closing movement the cam will begin to push the plunger outward, placing the liquid which is now in the outer end of the liquid-chamber and adjacent to the outer face of the plunger under pressure, whereby the plate-valve G will be immediately closed. The liquid must now flow back through the lateral port Q, through the L-shaped passage S^5 of the valve S′, and through the passage S^6, and the closing of the door will be comparatively slow or rapid, according to the freedom with which the liquid is allowed to flow through the said port and passages, for it is apparent that in the closing movement of the door the plunger will resist the action of the cam E, so as to prevent the spindle from rotating, except as it is allowed to rotate very slowly by the gradual outward movement of the plunger, which in turn is controlled by the gradual transfer of the liquid from the outer end of the liquid-chamber through the by-pass into the main portion thereof.

I would call particular attention to the fact that the plunger is not provided with a plunger-rod of any description and that it is not connected with the spindle, so as to be positively operated in both directions thereby, but it is merely acted upon by the cam E, mounted upon the spindle, in being positively pushed outward during the closing of the door. When, however, the door is opened, the work of moving the plunger inward is done not by the spindle, and hence by the person opening the door, but solely by the plunger-spring D. The plunger is therefore virtually cut out of action so far as the person opening the door is concerned and to obvious advantage, for the more completely the check can be cut out of action during the opening of the door the better, as its operation is desired only during the closing movement of the door.

The spindle F and cam E will rotate in one direction or the other, according as the door opens to the right or to the left. To provide for that, the liquid-chamber is formed with two clearance-spaces, as before mentioned.

My improved device is compact in form, contains comparatively few parts, is easily adjusted, and very efficient in use, being neither liable to be deranged in use nor leaking under any sudden pressure which may be imposed upon the fluid contained in its fluid-chamber.

It is obvious that in carrying out my invention some changes may be made in the construction herein shown and described. I would therefore have it understood that I do not limit myself to such a construction, but hold myself at liberty to make such alterations as fairly fall within the spirit and scope of my invention.

Having fully described my invention, what I claim as new, and desire to secure by Letters Patent, is—

1. In a liquid door-check, the combination with a spring-chamber, and a liquid-chamber arranged transversely thereto, of a mainspring located in the spring-chamber, a valved reciprocating plunger located in the outer end of the liquid-chamber which is provided with a by-pass connecting its outer end with its main or body portion to lead around the said plunger, a plunger-spring arranged to move the plunger inward in the opening movement of the door, a spindle connected with the mainspring, and means operated by the spindle, when the door is being opened, for positively moving the plunger outward against the tension of the plunger-spring and against the resistance of the liquid, but disconnected from the plunger which is moved, when the door is being opened, inward solely by the plunger-spring, substantially as described.

2. In a liquid door-check, the combination with a spring-chamber, of a liquid-chamber arranged transversely thereto, a mainspring located in the spring-chamber, a reciprocating plunger located in the outer end of the liquid-chamber, having its inner end formed with a central bearing-face, provided with one or more ports located eccentric to its center, and furnished with a valve which is applied to its outer end; a plunger-spring arranged to move the plunger inward in the opening movement of the door, a spindle connected with the mainspring, and a cam upon the spindle coacting with the said bearing-face of the plunger to positively move the same, when the door is being opened, outward in the liquid-chamber against the tension of the liquid and against the tension of the plunger-spring, but disconnected from the plunger which is moved inward, when the door is being opened, solely by the plunger-spring, substantially as described.

3. In a liquid door-check, the combination with a case having a spring-chamber, a liquid-chamber, and a diaphram separating the said chambers and formed with a large, centrally-arranged circular bearing-opening; of a mainspring located in the spring-chamber, a spindle connected with the said mainspring, a large disk-shaped bearing located upon the spindle and fitting closely in the said circular bearing-opening of the diaphragm, a large cam also located upon the spindle at a right angle thereto and at a point below the said disk-shaped bearing which resists the lateral thrusts of the cam, a plunger located in the liquid-chamber and having its inner end constructed and arranged to be acted upon by the cam with which it has no positive connection, but which forces it outward, and a plunger-spring coacting with the plunger and constituting the sole means for moving the same inward toward the center of the liquid-chamber when the door is opened, substantially as described.

4. In a liquid door-check, the combination with a case having a spring-chamber, and a liquid-chamber which is arranged transversely to the said spring-chamber; of a mainspring located in the said spring-chamber, a reciprocating plunger located in the said liquid-chamber, constructed with ports which permit the fluid to pass from one side of it to the other, and formed in its outer end with a deep, circular chamber; a plate-valve located in the said chamber for opening and closing the said ports, a spring coacting with the plunger to move it inward in the liquid-chamber, and a spindle connected with the said mainspring and provided with a cam located in a plane at a right angle to its longitudinal axis, and coacting with the inner face of the plunger to move the same outward in the liquid-chamber; and a regulating-valve mounted in the case and coacting with a port leading out of the outer end of the liquid-chamber and communicating with the main portion thereof.

In testimony whereof I have signed this specification in the presence of two subscribing witnesses.

ALBERT A. PAGE.

Witnesses:
WILLIAM S. COOKE,
CHARLES L. BALDWIN.