Nov. 23, 1937. R. H. CUNNINGHAM 2,100,241

ELECTRIC LAMP SUPPORT

Filed July 24, 1936

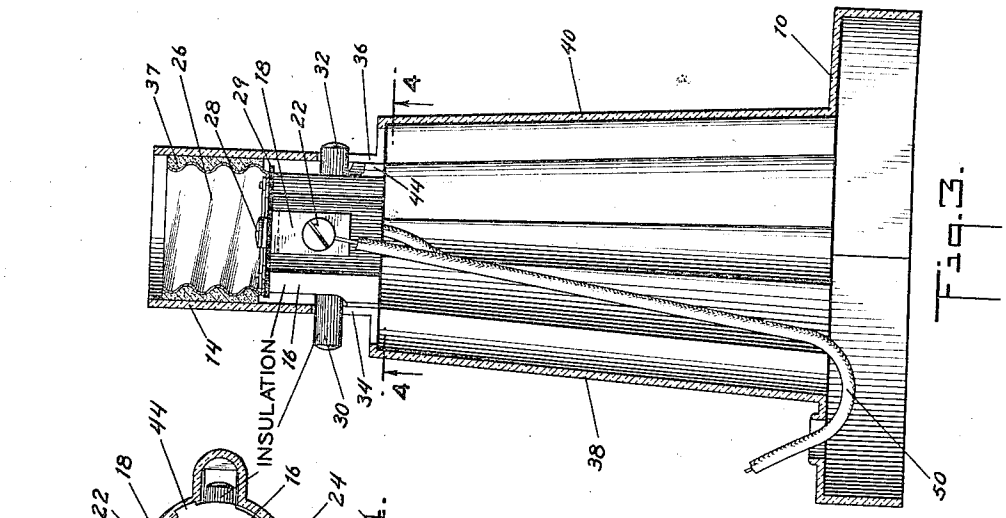

Fig. 3.

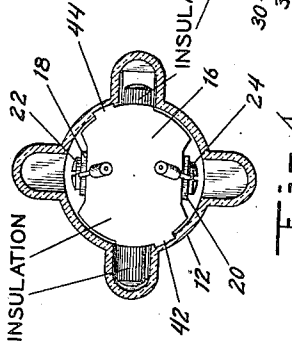

Fig. 4.

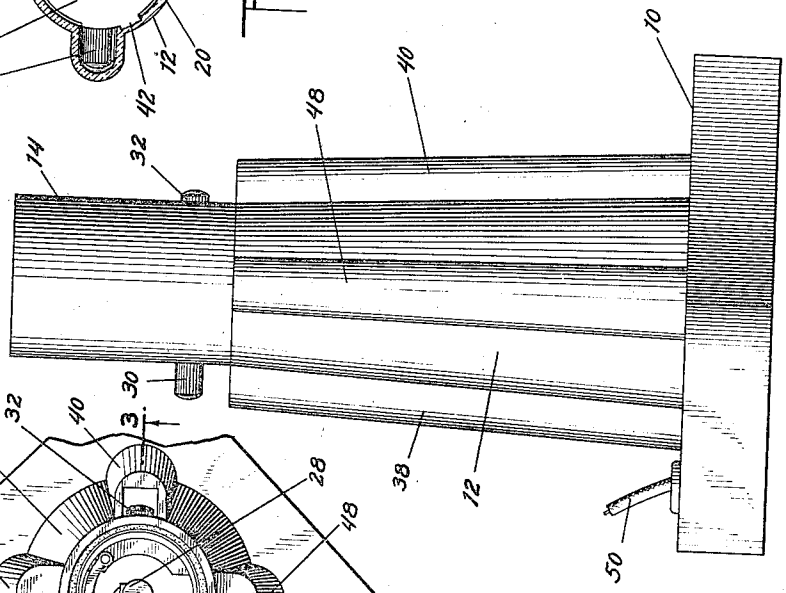

Fig. 2.

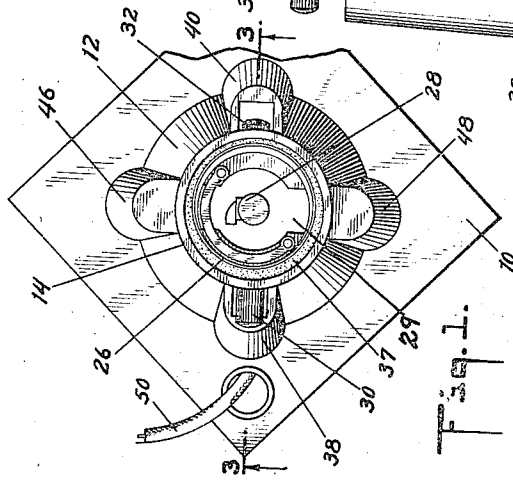

Fig. 1.

INVENTOR
ROY H. CUNNINGHAM
BY HIS ATTORNEYS

Howson and Howson

Patented Nov. 23, 1937 2,100,241

UNITED STATES PATENT OFFICE

2,100,241

ELECTRIC LAMP SUPPORT

Roy H. Cunningham, Fairfield, Conn., assignor to The Bryant Electric Company, Bridgeport, Conn., a corporation of Connecticut

Application July 24, 1936, Serial No. 92,430

3 Claims. (Cl. 240—81)

This invention relates to supports for electric light bulbs. More particularly it relates to such supports which are made of molded insulating material and are of the small type which are particularly designed for use on tables and desks, though it is not limited to such use. In devices of this type, as heretofore made, difficulty has been encountered in connecting the electric lamp socket to the support or in mounting the lamp socket upon the support. In some cases screw connections were used which often resulted in twisting of the cord and damaging the insulation of the electric conductor. Other disadvantages attended the mounting of the electric lamp socket upon the support in other manners.

It is an object of my invention to provide a support or mounting for an electric lamp socket and lamp which may be quickly and inexpensively manufactured and assembled and which is made of a minimum number of parts. Another object of my invention is to provide a support for an electric lamp socket and lamp in which the socket is supported in such fashion as to preclude the possibility of turning it with relation to the support and thereby preventing damage to the electrical conductor. Another object is to provide a simpler method and means for mounting an electric lamp socket in a support in a firmer manner than heretofore. Other objects and advantages will become apparent as it is described in connection with the accompanying drawing.

In the drawing—

Figure 1 is a plan view of an electric lamp socket and support embodying the principles of my invention.

Figure 2 is a side elevation view of the invention as shown in Figure 1.

Figure 3 is a vertical section view through the invention shown in Figures 1 and 2 with the section being taken along line 3—3 of Figure 1.

Figure 4 is a transverse section view thru the invention with the section being taken along line 4—4 of Figure 3.

Referring to the drawing, it will be noted that the invention comprises two units: the lamp socket and switch, and the supporting base or standard.

The base or standard is preferably made of molded insulating material with a square prismatic bottom 10 from which rises a hollow column 12 which tapers from the bottom upwardly to the socket holder or top part 14 of the column. This top part or socket holder is substantially cylindrical but may be slightly tapered to facilitate its removal from the mold.

The lamp socket is mainly of conventional construction, having an insulating base 16 with wire terminal plates 18, 20 and terminal screws 22, 24 therein on opposite sides of the base 16 lying in channels in the base. These plates are connectible through switch mechanism (whose details need not be particularly described) within the socket base 16, to conventional screw shell and center contacts 26 and 28 respectively. The switch serves to control the flow of current through the socket and is controlled by a pair of buttons 30, 32 extending diametrically out of the socket base in opposite directions. Pushing one button in pushes the other out and actuates the switch in conventional fashion. Longitudinal slots 34, 36 are formed in the wall of the top or socket portion 14 of the standard for the accommodation of the push buttons 30, 32. An insulating washer 29 is employed between the base 16 and shell 26, and serves to position the center contact 28 and to shield the switch mechanism from the screw shell 26.

In order that the socket may be inserted from the bottom of the standard into its proper position in the top of the standard, there are provided flutes 38, 40 running longitudinally up the standard from the base 10 to the top part 14. The flutes may terminate adjacent the slots 34 and 36. During insertion of the socket into its proper position the push buttons 30, 32 will slide up the flutes 38, 40 and finally into the slots 34, 36. The flutes 38 and 40 may form part of the design of the standard and may correspond to similar flutes 46, 48 for the same purpose.

If the flutes are not used the whole column 12 must then be made large enough to permit the socket to move up through it into the top part 14. The column can be of any desired shape. If it is made square in cross section and the push buttons are situated diagonally then the minimum dimensions may be less than if the push buttons are not diagonally placed. Other forms and shapes will occur to those skilled in the art and may be employed without departing from the invention. Likewise, other forms of operating means than the push buttons may be employed.

To hold the socket in position in the standard, cement 37 is applied to the exterior of the screw shell and to the interior of the portion 14 of the standard. The engagement of the push buttons with the slots will prevent rotation of the socket

in its holder, but to relieve the strain of attempted rotation from the switch parts, radial extensions or ribs 42, 44 may be formed on the lower part of the socket base to engage in complimentary recesses in the interior walls at the lowermost edge of the lamp socket holding section 14 of the standard.

Although I have found the use of cement to be a quick and effective means to secure the socket in place, other means may be employed.

An advantage of my invention is the ease with which the socket may be mounted in the standard after the feed wires 50 have been connected to the wire terminals 18 and 20. Twisting of the feed wires is eliminated since the socket is mounted in the standard by a simple straight line motion of pushing the socket up through the standard into part 14.

Another advantage is the elimination of the necessity for use of the usual brass cap and shell and their linings for the socket. All these advantages contribute to make an inexpensive but very sturdy and reliable construction.

Various modifications within the scope of the invention will occur to those skilled in the art. Therefore I do not limit myself to the specific embodiment shown.

I claim:—

1. In combination, an electric lamp socket having an insulating base, lamp receptacle contacts and switch mechanism mounted on said base, a rigid switch operating member projecting from said base, in combination with a thin walled standard of molded insulating material, said standard comprising a hollow column having a substantially cylindrical top portion closely fitting said socket base and being slotted to permit extension of said operating member therethrough, said column being of insufficient diameter to permit passage of the assembled socket but being provided with a fluted passageway for said operating member whereby said socket may be inserted into said top portion through the bottom of the standard.

2. In combination, an electric lamp socket having an insulating base, lamp receptacle contacts and switch mechanism mounted on said base, a rigid switch operating member projecting from said base, in combination with a thin walled standard of molded insulating material, said standard comprising a hollow column having a substantially cylindrical top portion closely fitting said socket base and being slotted to permit extension of said operating member therethrough, said column being of insufficient diameter to permit passage of the assembled socket but being provided with a fluted passageway for said operating member whereby said socket may be inserted into said top portion through the bottom of the standard, and means on said socket base engaging with said standard to prevent transmission of rotational stress to said operating member.

3. In combination, an electric lamp socket having an insulating base, lamp receptacle contacts and switch mechanism mounted on said base, a rigid switch operating member projecting from said base, in combination with a thin walled standard of molded insulating material, said standard comprising a hollow column having a substantially cylindrical top portion closely fitting said socket base and being slotted to permit extension of said operating member therethrough, said column being enlarged to permit the insertion of said socket base into said top portion through the column, said column having an opening adjacent said top portion and communicating with the slotted area of said top portion whereby said operating member may move out of said column as said socket base moves into said top portion.

ROY H. CUNNINGHAM.