Nov. 21, 1950 M. S. TOUGAS 2,530,921

PUSH-AND-PULL EXERCISER

Filed June 26, 1948 2 Sheets-Sheet 1

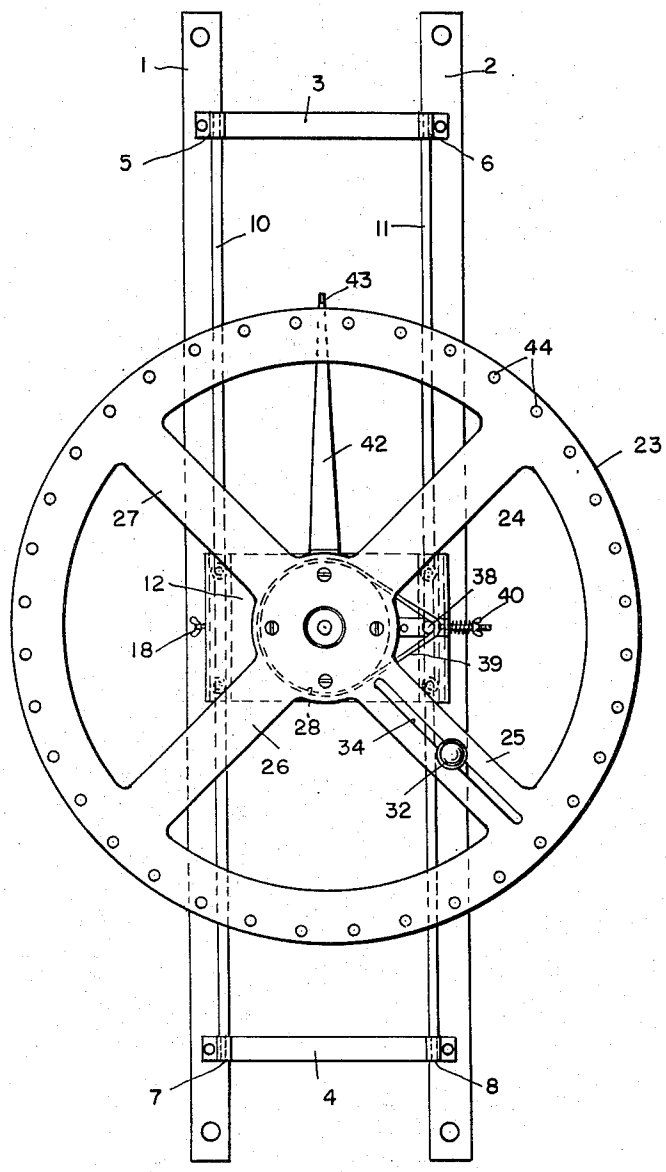


Fig. 1

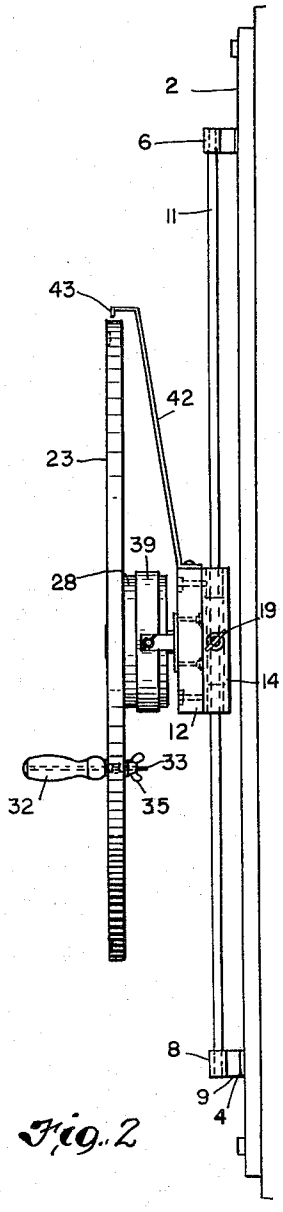


Fig. 2

INVENTOR.
MARCEL S. TOUGAS
BY
Oberlin & Limbach
ATTORNEYS.

Nov. 21, 1950 M. S. TOUGAS 2,530,921

PUSH-AND-PULL EXERCISER

Filed June 26, 1948 2 Sheets-Sheet 2

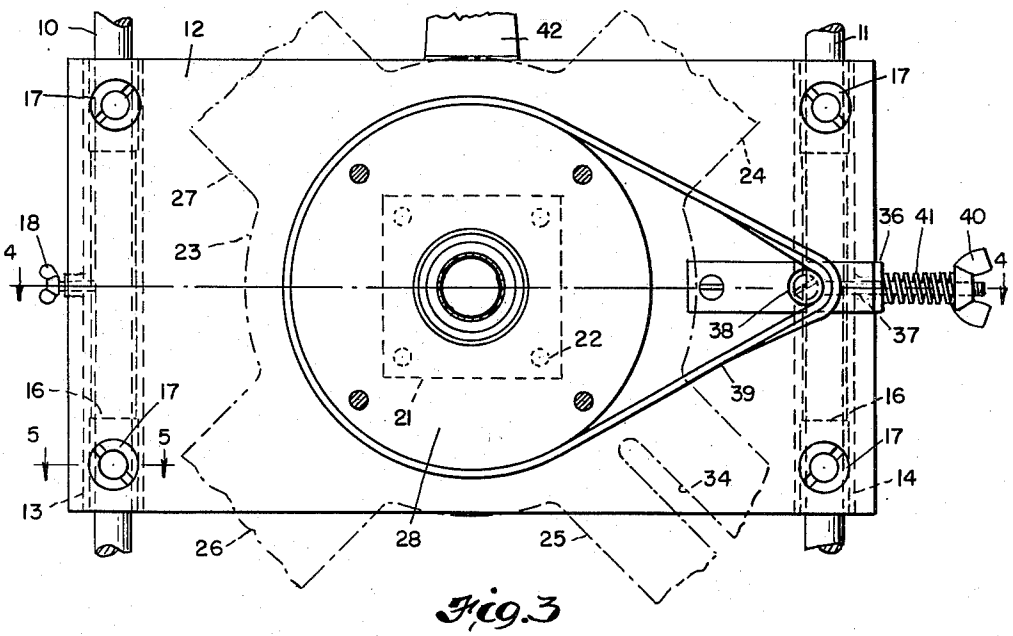


Fig. 3

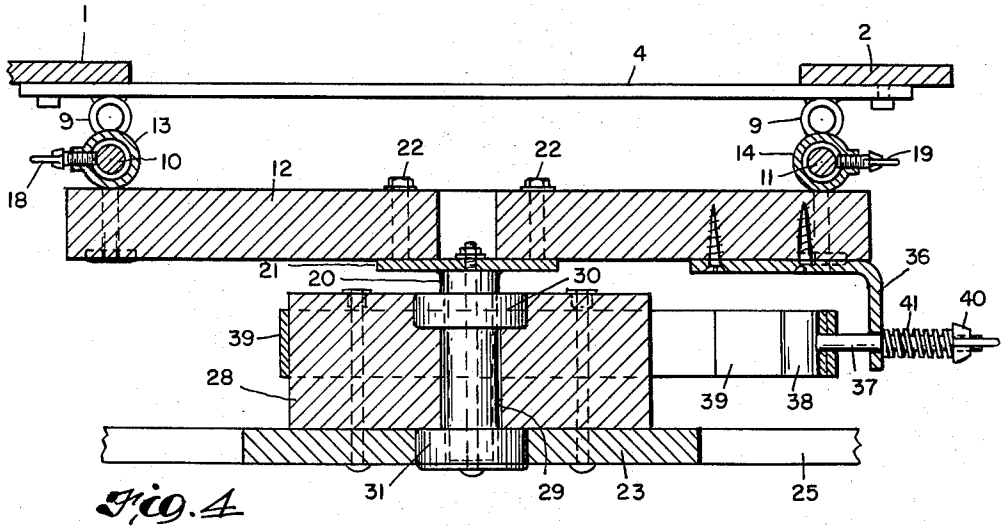


Fig. 4




Fig. 5

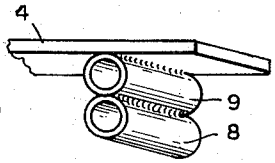


Fig. 6

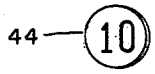


Fig. 7

INVENTOR.
MARCEL S. TOUGAS
BY
Oberlin & Limbach
ATTORNEYS.

Patented Nov. 21, 1950 2,530,921

# UNITED STATES PATENT OFFICE

2,530,921

## PUSH-AND-PULL EXERCISER

Marcel S. Tougas, Vermilion, Ohio

Application June 26, 1948, Serial No. 35,459

2 Claims. (Cl. 272—79)

1

This invention relates as indicated to an exercising wheel, and more particularly, to a therapeutic device adapted to develop, condition and retrain muscles which have been injured or immobilized as the result of accident or disease.

After an accident involving a broken arm, shoulder, or collar bone and dislocations of the arm and shoulder, it is generally necessary to apply a cast or brace to the injured member to immobilize the same. After removal of such cast or brace, the muscles involved are found to be shrunken and relatively useless. While ordinary exercise will tend to again develop such muscles, very considerable difficulty is encountered by the patient in elevating the injured arm beyond a certain level and also in extending the arm to full length. A similar disability often in an extreme form is commonly found in the case of sufferers from infantile paralysis and similar diseases.

It is therefore a primary object of my invention to provide an exercising device which is operative both to develop and extend the muscles of the operator.

Another object of my invention is to provide such device which will support the injured member during operation thereof.

Still another object is to provide such device which is fully adjustable to compensate both for the height of the operator and the degree of exertion of which he is capable.

Other objects of the invention will appear as the description proceeds.

To the accomplishment of the foregoing and related ends, said invention then comprises the features hereinafter fully described and particularly pointed out in the claims, the following description and the annexed drawing setting forth in detail certain illustrative embodiments of the invention, these being indicative, however, of but a few of the various ways in which the principle of the invention may be employed.

In said drawing:

Fig. 1 is a front elevational view of one embodiment of my invention adapted to be mounted upon a wall or like support;

Fig. 2 is a side elevational view of the device of Fig. 1;

Fig. 3 is a fragmentary enlarged elevational view of the brake means which I provide in association with my wheel;

Fig. 4 is a horizontal sectional view taken along the line 4—4 on Fig. 3;

Fig. 5 is a sectional view taken along the line 5—5 on Fig. 3;

2

Fig. 6 is a fragmentary perspective view of one of the brackets which I employ for mounting the vertical supporting rods along which my wheel is adapted to be adjustably secured; and

Fig. 7 is a detail view of one of the number tabs or brads disposed about the periphery of such wheel.

Referring now more particularly to said drawing and especially Figs. 1 and 2 thereof, the embodiment of my invention there illustrated comprises two spaced wooden upright members 1 and 2 adapted to be bolted to a wall or like support. These two members are connected adjacent their upper and lower ends respectively by means of metal crossbars 3 and 4 having tubular brackets 5, 6, 7, and 8 welded thereto. As shown in greater detail in Fig. 6, such tubular brackets such as bracket 8 are spaced from the corresponding crossbar 4 by means of an intermediate tubular section 9 welded thereto. Two parallel vertical rods 10 and 11 are carried by such respective brackets spaced outwardly from uprights 1 and 2. Such rods may be of tubular construction if desired, and all of the metal parts of my device will desirably be chrome plated, not only for the pleasing appearance afforded but also to facilitate cleaning.

Wooden slide or bridge 12 is attached to tubular sleeves 13 and 14 by means of studs 15 welded to the latter, and such sleeves encircle rods 10 and 11 respectively for vertical movement of slide 12 therealong. Bronze bushings such as 16 may desirably be provided within sleeves 13 and 14, and studs 15 may be secured in slide 12 by means of nuts 17. Thumb screws 18 and 19 in sleeves 13 and 14 respectively are operative to engage rods 10 and 11 to position slide 12 at any desired elevation therealong.

A stub shaft 20 is welded to a square metal plate 21 and the latter secured centrally of slide 12 by means of studs 22 (Fig. 4). A large wooden wheel 23 having four spokes 24, 25, 26, and 27 is bolted to a circular wooden block or brake drum 28 having a central opening 29 to receive stub shaft 20. Ball bearings 30 and 31 inset in such brake drum and wheel provide for easy rotation of the latter without any binding. The wheel will preferably be cut from a single piece of plywood and, like the other wooden parts, given several coats of spar varnish.

A handle 32 extending outwardly at right angles to the plane of the wheel is secured to spoke 25 thereof for radial adjustment therealong by means of bolt 33 which passes through slot 34 in such spoke and is secured in desired position by wing nut 35.

An angle bracket 36 is secured to one end of slide 12 and is pierced with an opening through which passes threaded stud 37. A short length of rod 38 is welded to the end of such stud to provide a pulling member of general hammer-head shape adapted to engage the inner periphery of a leather brake band 39, the ends of which are spliced and pierced at this point for insertion of stud 37 therethrough. Wing nut 40 and spring 41 on such stud permit brake band 39 to be subjected to any desired tension.

A pointer 42 of sheet metal is mounted centrally on the top of slide 12 and has an end portion which projects outwardly and then downwardly toward the outer periphery of wheel 23. Such point 43 is thus readily visible but, since it does not project beyond the outer face of the wheel, there is no danger of the patient being scratched thereby during operation of the device. A plurality of numbered brads 44 (Figs. 1 and 7) are inset in the face of the wheel about the periphery thereof, the numbers thereon preferably indicating degrees.

In operation, screws 18 and 19 will be released and slide 12 adjusted vertically to place the wheel at the desired elevation. For most uses the center of the wheel should normally be approximately level with the shoulder of the operator. Handle 32 is positioned radially of the wheel both to accommodate the length of arm of the operator (who may be a child) and also to regulate the amount of up-and-down movement of the arm during a complete rotation of the wheel. Nut 40 will then be turned to place any desired degree of tension on brake band 39 to determine the amount of energy which must be expended to rotate the wheel. For some purposes the tension may be entirely released so that very little energy is required by the operator to turn the wheel, but the operator's arm will be raised and lowered during each rotation thereof. It has been found that by this means a patient may cause his arm to be elevated at an angle very considerably beyond that to which he can freely raise it and even above the point he is capable of attaining upon a so-called "finger ladder." The momentum of the wheel, of course, assists the patient in carrying the hand over the upper part of the circle described by handle 32. As the treatment progresses, handle 32 may be moved gradually radially outwardly and also the wheel itself may be positioned at a greater elevation as above explained. By setting the wheel with the zero marker opposite pointer 43, the number of degrees through which the patient is able to rotate the wheel may be measured and improvement noted. Thus, at any fixed height of the wheel the patient can himself measure the degree of rotation through which he is capable of turning the same until he is finally able to accomplish a complete revolution.

By tightening nut 40 and applying tension to brake band 39, increased effort is required to be exerted to strengthen the wasted muscles. Such exercise has been found to be extremely beneficial not only to the arm and shoulder muscles but also to the muscles of the chest and back. Since handle 32 projects at right angles from the wheel, my device is equally useful for treatment of either arm, and the patient will of course normally stand or sit with one side toward the wheel rather than facing the same. My brake means is so arranged that the force required to rotate the wheel is the same no matter in which direction it is turned.



Other modes of applying the principle of the invention may be employed, change being made as regards the details described, provided the features stated in any of the following claims or the equivalent of such be employed.

I therefore particularly point out and distinctly claim as my invention:

1. An exercising device comprising two parallel vertical rods, tubular sleeves on said rods adapted to slide therealong, a cross-member secured to said sleeves, means adapted to secure said sleeves and cross-member in selected adjusted position along said rods, a stub shaft projecting outwardly from said cross-member, a large flat plywood wheel mounted on said shaft for easy rotation thereon, a brake drum secured to said wheel between the latter and said cross-member operatively associated with adjustable resilient tensioning means carried by said cross-member including a brake band passing about said drum and engaged by said tensioning means whereby the precise desired resistance to rotation may be achieved no matter in which direction said wheel is turned, a radial slot in said wheel, a handle secured to said wheel for adjustable positioning along said slot, said handle projecting normal to the face of said wheel, indicia in degrees about the face of said wheel adjacent the periphery thereof, and a pointer mounted on said cross-member and having a tip exposed above the top center of said wheel but behind the plane of the face of said wheel.

2. An exercising device comprising two parallel vertical rods, a support for said rods adapted for attachment to a wall with said rods spaced outwardly therefrom, a slide mounted on said rods, means for securing said slide in selected adjusted position therealong, a stub shaft on said slide projecting outwardly at right angles thereto, a large flat plywood wheel mounted on said shaft for easy rotation thereon, a brake drum secured to said wheel between the latter and said slide, adjustable resilient tensioning means carried by said slide, a brake band passing about said drum and engaged by said tensioning means adapted to apply the same braking force no matter in which direction the wheel is turned, a radial slot in said wheel, a handle radially adjustably secured in said slot and projecting at right angles to the face of said wheel, numerical indicia about the face of said wheel adjacent the periphery thereof, and a pointer mounted on said slide and exposed to view at the top center of said wheel.

MARCEL S. TOUGAS.

## REFERENCES CITED

The following references are of record in the file of this patent:


UNITED STATES PATENTS

| Number | Name | Date |
|---|---|---|
| 334,635 | Bowen | Jan. 19, 1886 |
| 473,218 | Fithian | Apr. 19, 1892 |
| 554,756 | Westaway | Feb. 18, 1896 |

FOREIGN PATENTS

| Number | Country | Date |
|---|---|---|
| 255,908 | Italy | Nov. 22, 1927 |