Feb. 22, 1944. G. D. PEET 2,342,299

BREW COOLING AND DISPENSING INSTALLATION

Filed July 26, 1940 3 Sheets-Sheet 1

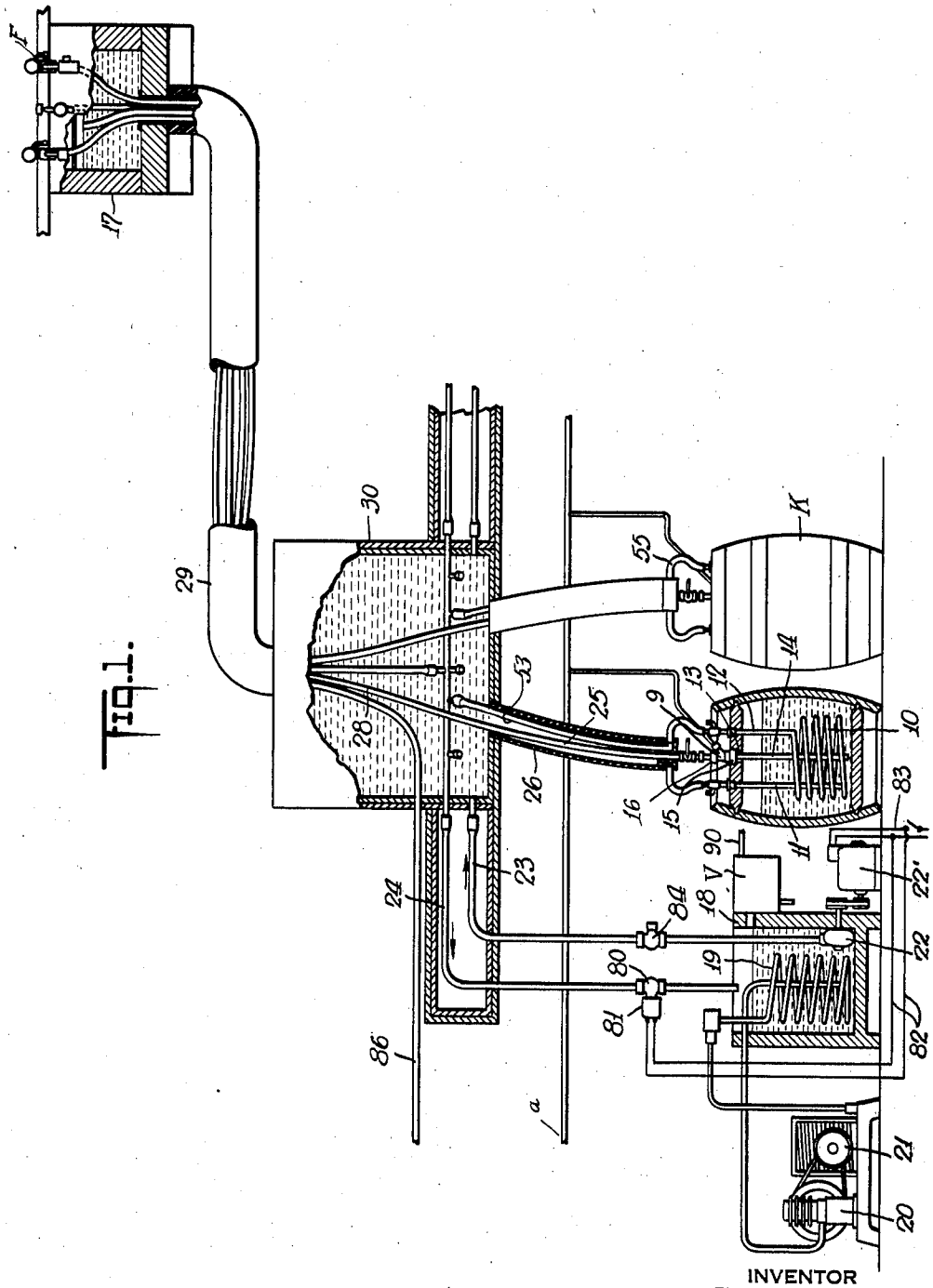

Fig. 1.

INVENTOR
Gerald D. Peet
BY
Dean Fairbank & Hirsch
ATTORNEYS

Feb. 22, 1944. G. D. PEET 2,342,299

BREW COOLING AND DISPENSING INSTALLATION

Filed July 26, 1940 3 Sheets-Sheet 2

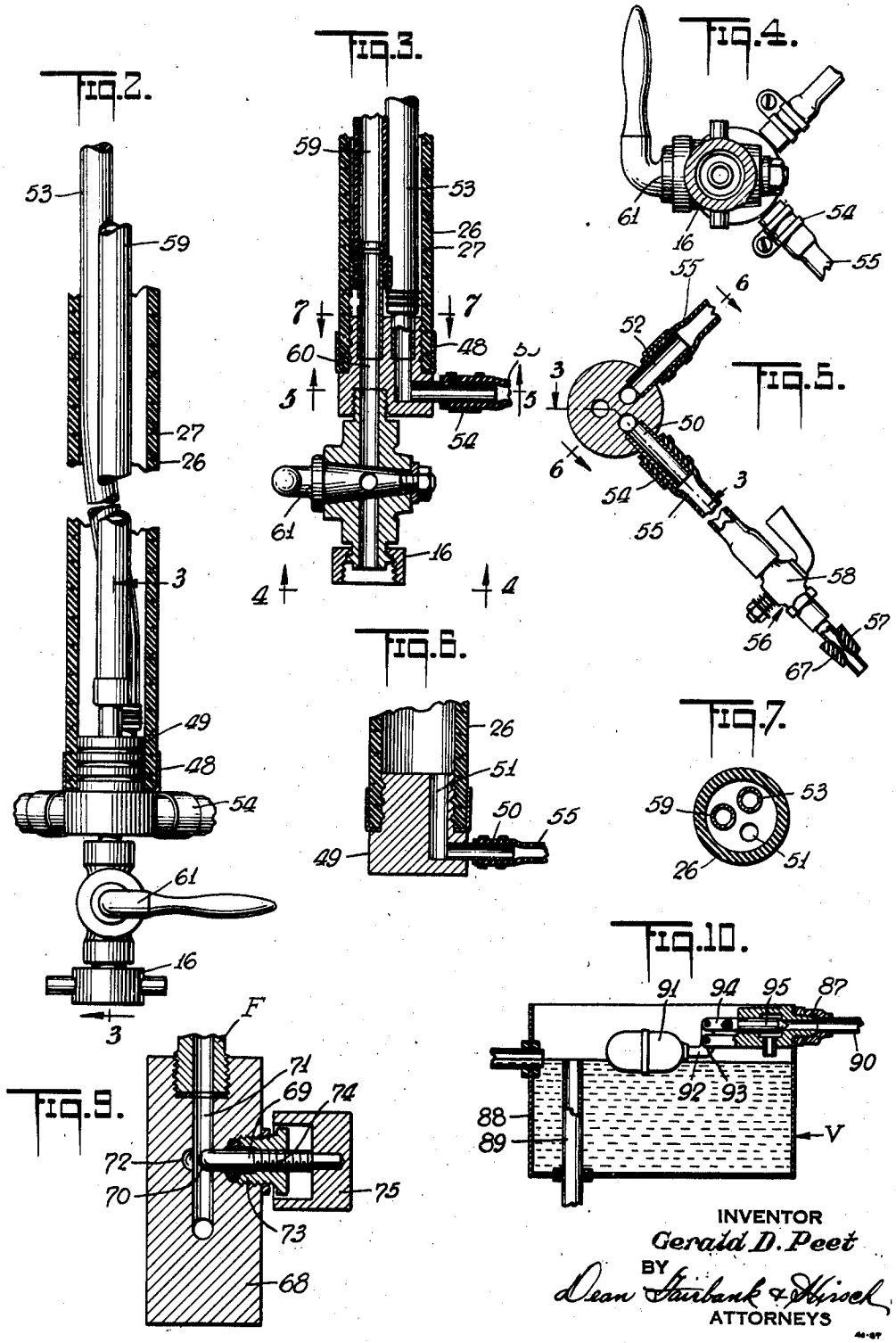

INVENTOR
Gerald D. Peet
BY
Dean Fairbank & Hirsch
ATTORNEYS

Feb. 22, 1944. G. D. PEET 2,342,299

BREW COOLING AND DISPENSING INSTALLATION

Filed July 26, 1940 3 Sheets-Sheet 3

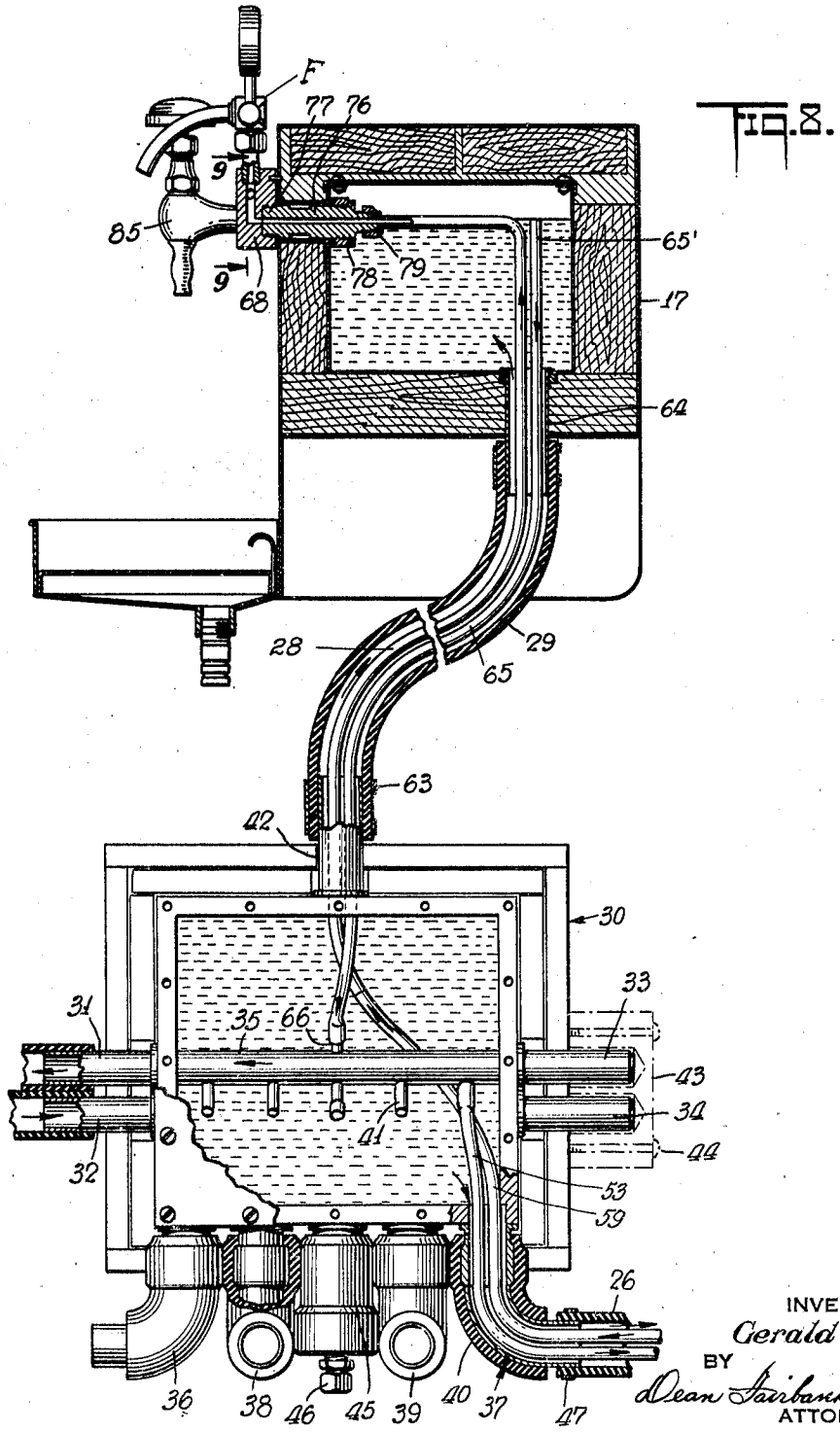

FIG. 8.

INVENTOR
Gerald D. Peet
BY
Dean Fairbank & Hirsch
ATTORNEYS

40-67

Patented Feb. 22, 1944

2,342,299

UNITED STATES PATENT OFFICE

2,342,299

BREW COOLING AND DISPENSING INSTALLATION

Gerald D. Peet, Montclair, N. J., assignor to Novadel-Agene Corporation, Newark, N. J., a corporation of Delaware

Application July 26, 1940, Serial No. 347,645

9 Claims. (Cl. 225—40)

The present invention relates to brew cooling and dispensing installations and is more especially concerned with improvements upon that general type of application of Schulse Patent No. 2,051,013, which is disclosed and claimed in Panagopoulos Reissue Patent No. 21,352 of February 13, 1940.

An object of the invention is to provide a practical installation of the above type, by which deterioration of the brew by loss of carbonation or otherwise, in the elongated path of flow from the keg to a faucet remote therefrom is reliably precluded and by which even in tropical heat, the brew as discharged from the faucet will be cooled to the desired low temperature.

Another object is to provide an installation of the above type, which admits of pre-fabrication of the equipment in a few units or sub-assemblies, that are installed with ease and economy at the tavern or tap room to permit drawing from any number of kegs on tap to faucets remote therefrom.

Another object is to provide an installation of the character set forth, from which draining of the cooling fluid in whole or in part by siphoning is precluded in the course of disconnecting a keg, for instance, and in which any eventual loss of cooling fluid by leakage or evaporation or the like is automatically compensated for.

A feature of the invention is the arrangement of heat insulating hose, jacket or tube structure connecting the hollow parts in the various beer kegs to the dispensing box remote therefrom and enclosing the respective brew lines, through which jacket cooling fluid is circulated to apply refrigerating effect to the brew line substantially throughout the entire course from the keg to the faucet, the return of cooling fluid from the kegs and the dispensing box respectively being desirably also conveyed through such heat insulating tubes or jackets for further refrigeration effect.

In the accompanying drawings in which are shown one or more of various possible embodiments of the several features of the invention,

Fig. 1 is a diagrammatic view of the installation,

Fig. 2 is a sectional view with parts broken away showing the hose assembly connecting the keg with respect to the distributing case,

Fig. 3 is a view in longitudinal cross-section taken on line 3—3 of Fig. 2,

Fig. 4 is a view in transverse cross-section taken on line 4—4 of Fig. 3,

Fig. 5 is a transverse sectional view taken along the line 5—5 of Fig. 3,

Fig. 6 is a transverse cross-section taken on line 6—6 of Fig. 5,

Fig. 7 is a view in transverse cross-section taken along the line 7—7 of Fig. 3,

Fig. 8 is a sectional view showing the details of the assembly of distributor case and dispensing box and connections from the former to the hose which leads to the kegs and which are shown diagrammatically in Fig. 1,

Fig. 9 is a transverse sectional view through the flow restriction taken on line 9—9 of Fig. 8, and,

Fig. 10 is a cross-sectional view of the float control associated with the refrigerator box.

Referring now to the drawings, a typical installation according to the invention comprises a plurality of brew kegs K ordinarily standing on the floor of a room or basement, each of which kegs is of the general type disclosed in the prior Schulse Patent No. 2,098,211. For the present purpose, it will not be necessary to describe the construction of such kegs in detail, but it need merely be briefly noted that the keg, whether of wood or of metal, has incorporated in the structure thereof a hollow part, in heat conductive relation with the brew contents, and is equipped with an inlet and an outlet for cooling fluid which is circulated therethrough to cool the brew in the keg and keep it cool. In the particular embodiment illustratively shown in the drawings, the hollow part or cavity is a metal cooling conduit extending in a helical coil 10 in the lower half of the keg, and having risers 11 and 12 affixed in the upper head and through one of which the cooling fluid, desirably chilled water, enters and through the other of which it leaves the keg in the continuous circulation therethrough. Each of those of the kegs on tap has shown inserted through a tap hole 13 thereof, the draft tube 14 which may be of conventional construction and passes through a conventional stuffing box or connector 9 which in turn is affixed to the keg by means of an appropriate bushing 15. To each of the kegs on tap is connected by means of a conventional union 16, the lower end of the brew line, which extends to the remote faucet. The conventional carbon doxide gas or air line for propelling brew from the kegs is shown at *a*. In case of the usual basement installation, the brew line extends to the street floor where the dispensing box 17 is located at the bar.

According to the present invention, the cooling liquid is circulated not only through the cool-

ing coil or other hollow part of the keg structures, but also along the entire length of the brew line leading from the keg to the dispensing box. To this end, the water or other cooling liquid in the liquid cooling box 18 is maintained at the desired cold temperature by any suitable refrigerating system, the one diagrammatically shown comprising a coil 19 submerged in said cooling box 18 through which the refrigerant is circulated, the compressor 20 being driven from motor 21.

The cooling medium is propelled by means of a pump 22 submerged in the liquid cooling box and driven by motor 22' into a horizontal supply main 23, and it is discharged back into the box 18 through return main 24.

Desirably, the respective kegs are connected in parallel across the mains, and according to one feature of the invention that section 25 of the brew line from each keg to the vicinity of the circulating mains is in heat exchange relation with respect to the branch refrigerating connections to the keg. For this purpose, the connections both for brew flow and for cooling fluid between the keg and the region of the mains are all incorporated in a single unitary conduit, ordinarily a rubber hose 26 of conventional flexible type.

Likewise, the major length of brew lines 28 from said hoses leading to the brew faucets F on the dispensing box are incorporated in a heat insulating jacket 29, through which cooling fluid is circulated. The specific construction of the heat insulating jacket need not be further described herein as it is not per se part of the invention herein claimed. A desirable embodiment of such jacket is described in my copending application, Serial No. 298,753 filed October 10, 1939.

The various connections for brew and for cooling fluid between the mains, the kegs and the dispensing box are desirably led through a distributor case 30. That case is preferably a box with heat insulating walls, through the opposite sides of which extend two pairs of pipe studs, the pair 32 and 34 being desirably aligned and communicating directly with the interior of the box, and the pair 31 and 33 being connected by a pipe length 35 across the interior of the box as best shown in Fig. 8.

The bottom of the box has affixed thereto a plurality, illustratively four outlets. For compactness, the outer outlets 36 and 37 are elbows which at their outer ends extend outward longitudinally of the box, and the inner elbows 38, 39 extend at right angles thereto as shown. These elbows are desirably covered, each with an insulating jacket 40, with only the extremity of the elbow protruding, for connection of hoses 26 thereto as hereinafter described.

The pipe 35 has desirably a plurality of pipe stud branches 41 extending generally downward therefrom. The top of the distributor case has a pipe stud 42 affixed therein protruding upward therefrom.

Where the mains extend only to one side of the distributor case instead of to both sides as shown in the diagrammatic view of Fig. 1, a cap 43 shown in dot and dash lines would be used to close the studs 33 and 34 and such cap would be affixed to the box by screws 44, so that the studs on either side may be sealed for facility of connecting the pipe mains either at the left or right of the box, as desired. Two or more of the distributing boxes could be connected in a single system in which case the cap 43 would be removed from all but the box at the extreme right or left as the case may be. In addition, the distributor case 30 is preferably provided with a straight outlet 45 normally closed by plug 46 for accommodating a drinking water conduit, not shown in Fig. 8, but indicated diagrammatically at 86 in Fig. 1. The conduit 86 is passed through outlet 45, through case 30 and through the length of jacket 29, the water cooled in such course of flow being delivered through faucet 85 at the outer end of conduit 86.

The connection between each keg and the corresponding elbow on the distributor case is a corresponding unit best shown in Figs. 2 to 7. This unit is enclosed in the rubber hose 26, preferably reinforced with a helical wire 27 molded therein. The hose 26 is affixed at one end by means of a hose clamp 47 about the protruding metal extremity of the corresponding elbow. The opposite end of the hose has a ferrule 48 thereon, and is forced over the peripherally grooved plug 49, which has a pair of radially extending pipe studs, one of which, 50, communicates with a longitudinal bore 51 in the plug, that in turn communicates with the interior of the hose 26. The other stud 52 communicates with a return pipe 53 in the interior of the hose. About the studs 50 and 52 are affixed by means of hose clamps 54 short rubber tubes 55, the outer ends of which have metal pipe fittings 56 therein equipped with tapered plugs 57, desirably of rubber, that are plugged into the corresponding inlets and outlets of the cooling coils 10 of the respective kegs. The fittings 56 also include cocks 58 for shutting off the supply of cooling fluid in replacing an empty keg.

The plug 49 also has mounted therein the inner end of a flexible beer hose 59 which extends through the hose 26. This beer hose is preferably of a special synthetic rubber composition inert to beer, one desirable form of which is made of the material known as "Koroseal." Aligned with the bore 60 through the plug 49 for the beer is a beer cock 61, the outer end of which carries the conventional union 16, which is removably affixed to the extremity of the draft tube 14.

The return pipe 53 and the beer hose 59 extend beyond the upper or outer end of the hose 26, which is affixed to the distributor case as above described. The return pipe 53 is passed through the corresponding elbow into the distributor case 30, and is telescoped over and affixed to the corresponding stud branch 41 of the pipe 35 in said case. The beer hose 59 is also passed through the elbow, and is affixed at its upper end desirably to a stainless steel brew line section 28. The brew lines from the several kegs are gathered at the upper end of the distributing case and extend through the stud 42 up to the dispensing box 17.

The heat insulating jacket 29 is affixed as by a hose clamp 63 to said stud 42, encircles the several brew lines, and is affixed at its opposite or upper end to a stud 64 at the lower end of the dispensing box 17. A return pipe 65 extends from the stand pipe end 65' thereof near the top of the dispensing box 17 through the heat insulating jacket 29, and is affixed at its lower end upon branch stud 66 of pipe 35 in the distributor case, which stud desirably extends generally upward as shown.

The operation of the installation as thus far described will be briefly summarized. A fresh keg is connected on the line by pressing the taper plugs 57 of the rubber tubes 55 of the corresponding hose 26 into the terminals of the cool-

ing coil 10. Thereupon the cocks 58 are opened.

When the pump 22 is operating, the cooling fluid is pumped from the box 18 through the main 23 to fill the distributor case 30. Thence it is pumped in parallel through the various elbows 36 to 39 to fill the hoses 26 to and the coils 10 of the various kegs on the line. Each hose conveys the cooling fluid through the plug 49 thereof by way of inlet tube 55 through the cooling coil 10 in the keg, and by way of the companion tube 55 back to the plug 49 and thence through return pipe 53 within the hose 26 to the associated branch stud 41 and into the return main 24 back to the liquid cooling box 18.

In parallel with the flow through the various kegs, cooling fluid is pumped through the stud 42 upward through the heat insulating jacket 29 around the lengths of the various brew lines 28 therein into the dispensing box 17, from which it overflows by way of the upper or stand pipe end 65′ of the return pipe 65, back through the length of the heat insulating jacket 29 to the stud 66 to return through the return main pipe 35 back to the refrigerator box 18. The interior of the distributor case 30 is in effect part of the supply or inlet main, for all of the kegs as well as the dispensing box as described are supplied with cooling fluid by tapping therefrom.

Since the resistance to flow of the elongated heat insulating jacket 29 and return pipe 65 therein from the dispensing box would, in the absence of other precautions be considerably greater than that through the kegs, and especially through a multiplicity of the kegs connected in parallel, additional resistance is imparted to the circulation of cooling fluid to the latter, by restricting the pipe fittings 56, desirably at the region encircled by the tapered plug 57 as for instance by a Venturi restriction 67. As a consequence, the flow is so distributed as to cause, in the usual installation, a flow of cooling fluid at the rate of one gallon per minute through the dispensing box and 1.5 gallons per minute through each of the kegs on the line.

Since the cooling fluid is supplied from the main to fill all voids in the flexible hoses 26 as well as in the heat insulating jacket 29, no air voids or pockets result and the cooling of the pipes or tubes therein is particularly effective. The return flow through the much smaller return pipes 53 and 65 respectively contained in the hoses and in the heat insulating jacket is at faster rate of flow, and contributes further to the refrigerating effect, and to the neatness and simplicity of assembly.

The entire length of the draft tube 14 including the upper exposed length thereof is maintained cold by the circulation of cooling fluid through the keg K, so that the brew on its way through said draft tube has no opportunity to warm by the time it enters the brew hose 59. Within the outer hose 26, the brew hose is further cooled and throughout the entire passage through the brew line clear up to the dispensing box, the brew line is enclosed within refrigerated heat insulated chambers, and the brew at no part of its course can become heated and the brew is therefore guarded throughout against the release of gas, and will not become cloudy, flat or otherwise impaired.

In the flow of the brew through the brew line on its way from the keg to the faucet, further cooling occurs of the brew derived from the already cooled keg contents. This is due to the fact that the hose 26 and the jacket 29 respectively, are excellent heat insulators, and the cooling fluid presents a larger heat exchange area with the volume of brew in contact therewith, whereas the keg is a less perfect heat insulator, and the cooling coil in the keg has a much smaller heat exchange area, relative to the volume of brew cooled thereby. Accordingly, in the passage of the cooled brew from the keg to the faucet, the brew is subjected to further cooling. The usual thermostat on the circulating system is preferably set in accordance with general climatic conditions, so that in moderate weather the brew in the keg may be maintained cool, but at temperature somewhat above dispensing temperature, the further refrigeration to bring it down to dispensing temperature being effected in the traverse thereof through the brew line to the faucet. In extremely warm weather, above ninety degrees F. for instance, it is frequently difficult with ordinary keg constructions and with the use of plain chilled water as the cooling medium to draw the brew from the keg at below 40 degrees F. However, in the present system the further cooling down to 36 or 38 degrees F. necessary under such adverse weather conditions to obtain a drinking temperature in the glass of 40° to 45° F. would in that case be effected in the course of the transit of the brew through the length of the brew line.

In addition to delivering the brew at the proper temperature, it is important that the brew be delivered in the glass with the head or collar preferred by beer fanciers. According to the present invention, this head may be accurately predetermined in manner now to be set forth, so that it invariably will result, by simply opening the faucet quickly without the exercise of any particular skill on the part of the bartender. To this end each faucet F is mounted on a corresponding carrying block 68 at the forward face of the dispensing box, equipped with a transverse rod 69 having a hemispherical end 70, protruding transversely across the longitudinal bore 71, and axially aligned with a corresponding hemispherical depression 72 transversely of the bore. The rod 69 is attached to the block by means of a gland 73 into which the rod is threaded as at 74, the outer end of the rod being equipped with a knob or handle 75. The block 68 is affixed to the outwardly protruding nipple 77 of a plug 76 in the dispensing box, affixed by lock nuts 78 to the forward wall of said box, and to the inner end of which the extremity of the associated brew line is affixed as for instance by a flare coupling 79.

The less the distance between the end 70 of the rod and the depression 72, the greater the agitation of the brew in its flow therepast and the greater the release of carbon dioxide gas and the greater the resultant head or collar. The construction set forth effects an accurate determination of such head or collar without introducing any excess turbulence or foaming, as would frequently occur if the brew were passed over sharp edges or if it were drawn by forcing it through narrow restrictions.

While the spherical end of the rod and the corresponding conformation of depression has been found to give best results, a corresponding conical conformation has been found to give useful results.

Means is desirably provided to prevent possible draining by siphoning of the contents of the usually elevated dispensing box 17 and of the

distributor case 30. To that end, it is preferred to provide a check valve 80 in the return line immediately above the refrigerator box 18. This valve is arranged automatically to close whenever the motor 22′ for the circulating pump is out of action. To this end the valve is arranged to be opened by an electromagnetic coil 81 connected by leads 82 across the mains 83 for the pump motor 22′.

To prevent draining of the distributor case through the inlet main 23, when the system is out of operation, a check valve 84 of any desirable construction is interposed in that main, near the liquid cooling box 18. That check valve is levitated under the fluid pressure generated by the circulating pump 22 during operation, and closes by gravity when such pressure is discontinued.

To compensate for evaporation of water from the circulating system, and minor loss by leakage, a float valve unit V is desirably connected to the liquid cooling box 18 and connected by nut 87 to the water main 90. It serves to maintain the cooling liquid in the said box at uniform level. This float unit may be of entirely conventional construction and illustratively comprises a box 88 with a standpipe 89 therein leading to the water main 90. A float ball 91 has a bell crank arm 92 pivoted at 93 and connected by link 94 to a plug valve 95 controlling the admission of water from main 90 to the level determined by float ball 91.

As many changes could be made in the above construction and many apparently widely different embodiments of this invention could be made without departing from the scope of the claims, it is intended that all matter contained in the above description or shown in the accompanying drawings shall be interpreted as illustrative and not in a limiting sense.

Having thus described my invention, what I claim as new and desire to secure by Letters Patent is:

1. A brew cooling and dispensing installation, comprising a keg, a faucet remote from said keg, a brew line extending from said keg to said faucet, a circulating system for cooling fluid and including a pair of liquid tight jacket lengths, one encircling the portion of said brew line adjacent the keg and the other encircling the major length of brew line therebeyond to said faucet, means feeding cooling fluid in parallel into the adjacent ends of the respective jacket lengths, passageways within the respective jacket lengths and extending the lengths thereof for return flow of the cooling liquid from the respective opposite ends thereof, said keg having a hollow part in heat exchange relation with the keg contents and affording communication between the corresponding jacket length and the return passageway thereof, and means adjacent the faucet affording communication between the corresponding jacket length, and the return passageway thereof.

2. A brew cooling and dispensing installation, comprising a pair of mains, means for pumping cooling liquid through one of said mains and returning it through the other, a plurality of brew kegs in the neighborhood of said mains, a dispensing box remote from said kegs, each of said kegs having a hollow part incorporated in the structure thereof and in heat exchange relation with the brew contents, said hollow part having an inlet and an outlet, each of said kegs having an associated heat insulating hose with a pair of passageways therethrough connected at their opposite ends respectively to the respective mains and to the inlet and outlet of the respective hollow parts of the kegs, a single heat insulating jacket extending between said mains and said dispensing box, said jacket having a pair of passageways therethrough connected to said respective mains at one end and communicating with the interior of the dispensing box at the other end, draft tubes in those of the kegs on tap and elongated brew lines connected thereto, extending through the respective hoses, all of said brew lines being gathered together and extending through the jacket from the mains to the dispensing box.

3. A brew cooling and dispensing installation, comprising a keg having a draft outlet, a dispensing box on the floor of the building above that where the keg is disposed, an elongated brew line leading from said draft outlet to said dispensing box, heat insulating jacket structure enclosing substantially the entire length of the brew line, a source of cooling liquid, means for propelling the same through the entire length of the jacket structure and about the brew line, return pipe means within the said jacket structure for discharging therefrom the cooling liquid that has traversed the length of the jacket structure, the said keg having a hollow part in heat exchange relation with the brew contents thereof, said hollow part affording communication between the corresponding end of the jacket structure and the return pipe means therein, the dispensing box being supplied from the opposite end of said jacket structure and overflowing through the return pipe means thereof.

4. A brew cooling and dispensing installation comprising a distributor case having pairs of connections protruding from the opposite sides thereof for cooling fluid mains, a pipe length constituting a main within said case joining two of said connections, branch studs on said pipe length, studs at the lower end of said case, heat insulating conduits clamped to said studs, brew kegs, each having a hollow part in heat transfer relationship to the brew contents, the free extremities of the conduits being connected to deliver into the hollow parts of the respective kegs, a return pipe within each of said conduits communicating with the hollow part of the associated keg, the said return pipes of the respective kegs being affixed to the respective branch studs, said distributor case having an outlet at its top, a dispensing box remote from said distributor case, a heat insulating jacket connected between said outlet and said distributing box, a brew line including a flexible element within the respective conduits extending into said distributor case and brew pipes connected thereto, the brew pipes from the several kegs being gathered together and extending through said jacket to the distributing box, and a return cooling line extending from said dispensing box through said jacket and communicating with said main.

5. A brew cooling and dispensing installation comprising a distributor case having a cooling fluid inlet through one side thereof adapted to fill said case, cooling fluid outlets through the bottom of said case, conduits connected at one end thereof to the respective outlets, brew kegs having hollow parts in heat exchange relation with the brew contents, the respective opposite ends of said conduits being connected to deliver to said respective hollow parts, pipes for return flow of cooling fluid from the respective hollow parts,

said distributor case having a return main therethrough with a plurality of branch studs over which the respective return pipes from the kegs are affixed, a heat insulating jacket connected to the wall of said distributor case, a dispensing box remote therefrom to which said jacket extends, for delivery of cooling fluid from said distributor case to said dispensing box, an overflow return pipe from said distributor box through the length of said jacket and affixed at its lower end to said return main in said case, brew lines from the respective kegs on tap including flexible sections through the respective conduits, extending through the interior of said distributor case, and lengths of brew line connected thereto, said brew lines being gathered together and extending through the heat insulating jacket.

6. A brew cooling and dispensing installation, comprising a plurality of kegs, each having a hollow part therein in heat exchange relationship to the respective keg contents, a dispensing box remote from said kegs, a distributor case near said kegs and remote from said dispensing box, a source of cooling fluid connected to deliver into said distributor case to fill the later, conduits connected in parallel from the bottom of said case to the respective hollow parts of said kegs, to deliver cooling fluid therethrough, return pipes within said several conduits for return flow of cooling fluid, a main return pipe having branch connections for the several return pipes, a heat insulating jacket communicating with said case and feeding to said dispensing box, an overflow pipe in said dispensing box extending downward through said heat insulating jacket and connected to said return main, flexible brew line sections within the respective conduits that communicate from those of the kegs on tap to the interior of said distributor case, and brew lines connected to said sections and gathered together within said heat insulating jacket to deliver to the dispensing box.

7. As an article of manufacture, a conduit unit for use in a brew cooling and dispensing installation, comprising a heat insulating hose having a plug at one end thereof, studs radiating from said plug for accommodating the ends of, hose lengths the other ends of which are to be connected to the respective ends of internal cooling conduits of brew kegs, said plug having a passageway therethrough communicating directly from the interior of the hose to one of the studs, a cooling fluid return pipe within said hose affixed at its inner end with respect to said plug and in communication with the other stud thereon, a flexible brew line within said hose fixed at its inner end to said plug, a shut off means carried by said plug, and means therebeyond for attachment of the unit to a draft connection, both said return pipe and said flexible brew line extending beyond the free end of said hose.

8. In a brew cooling and dispensing system, a series of kegs, each having a hollow part incorporated in the structure thereof and in heat transfer relation with the keg contents, a dispensing box remote from said kegs, a liquid cooling box, an inlet and a return main connected therewith, a pump propelling cooling liquid from said box through said mains, connections from the respective mains in parallel to the hollow parts of the several kegs and to the dispensing box, all supplied from said mains, and a valve biased to closed position and located in the return main and near said liquid cooling box, said valve being constructed and arranged to be maintained open only as long as the cooling fluid is being propelled.

9. The combination recited in claim 8 in which a check valve is disposed in the lead to the inlet main and near the liquid cooling box.

GERALD D. PEET.