April 3, 1962 A. W. J. WELLS 3,028,138

ANTI-VIBRATION MOUNTINGS

Filed Sept. 16, 1959 3 Sheets-Sheet 1

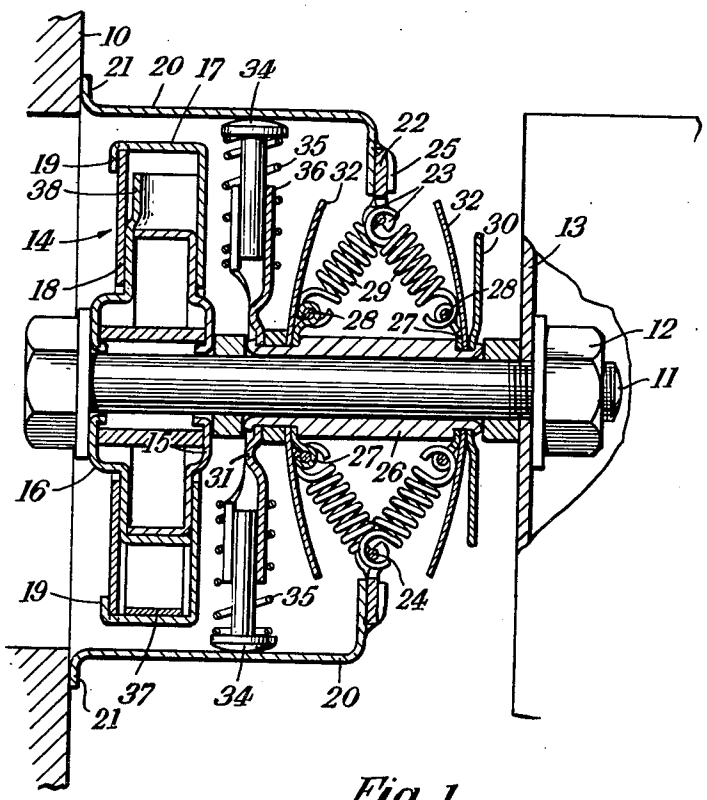

Fig. 1.

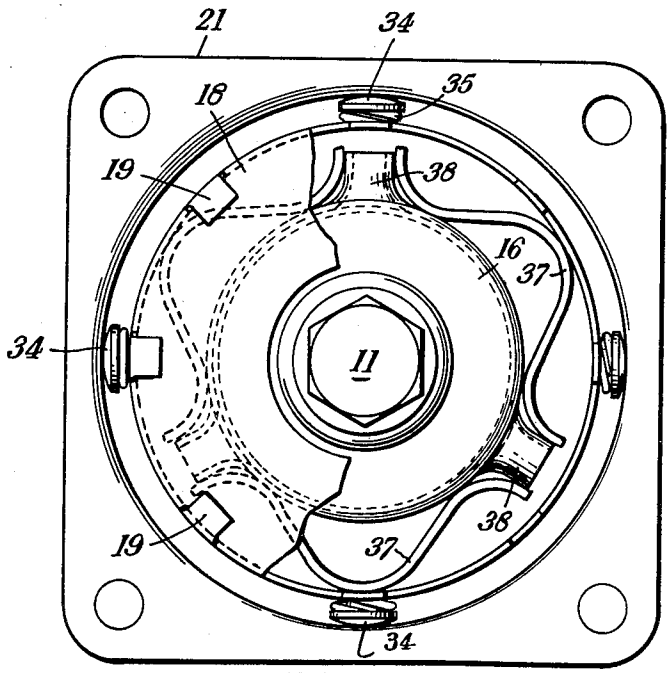

Fig. 2.

April 3, 1962 A. W. J. WELLS 3,028,138

ANTI-VIBRATION MOUNTINGS

Filed Sept. 16, 1959 3 Sheets-Sheet 2

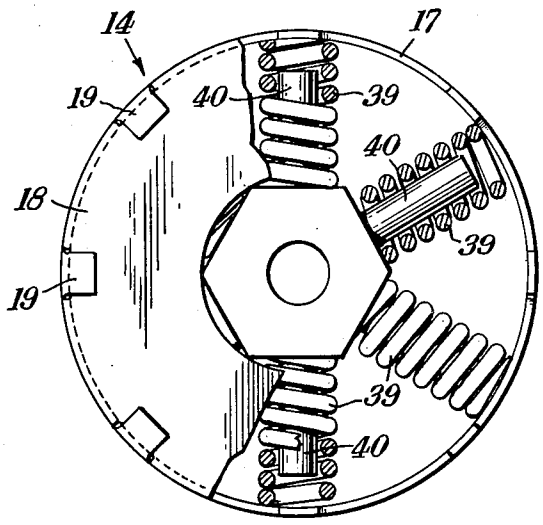

Fig. 3.

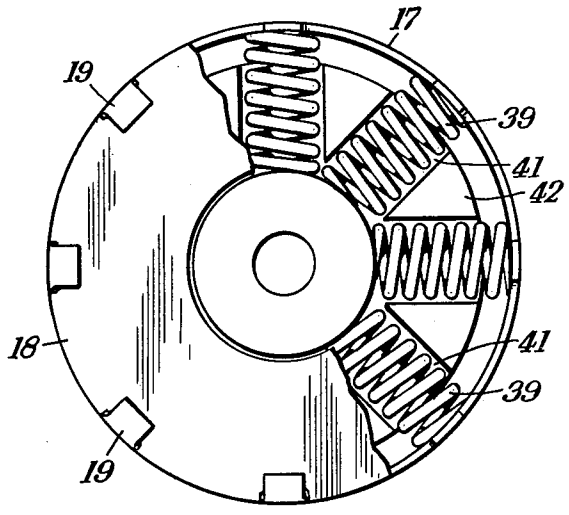

Fig. 4.

April 3, 1962 A. W. J. WELLS 3,028,138

ANTI-VIBRATION MOUNTINGS

Filed Sept. 16, 1959 3 Sheets-Sheet 3

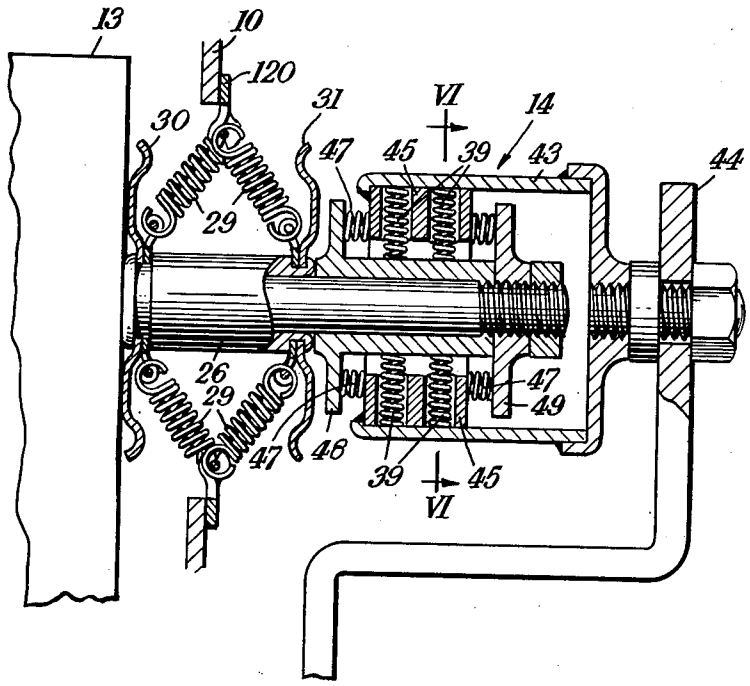

Fig. 5.

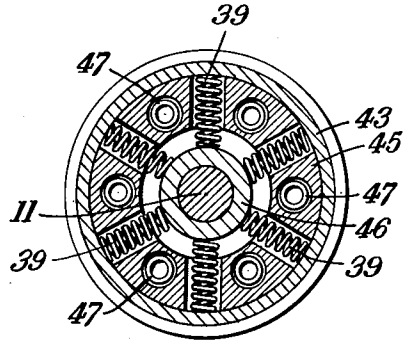

Fig. 6.

United States Patent Office 3,028,138
Patented Apr. 3, 1962

3,028,138

ANTI-VIBRATION MOUNTINGS

Alfred William John Wells, Llangoed, Anglesey, North Wales, assignor of one-half to A. Wells & Company Limited, London, England, a British company, and one-half to United-Carr Fastener Corporation, Cambridge, Mass., a corporation of Delaware

Filed Sept. 16, 1959, Ser. No. 840,334
2 Claims. (Cl. 248—358)

This invention relates to anti-vibration mountings of the type described in United States Patent No. 2,600,090 and comprising an annular base member, a columnar member passing centrally through the opening in the base member, and two sets of helical springs, one set on each side of the base member, the springs extending between and being secured at their opposite ends to the base member and to the columnar member respectively, being arranged with their axes on the surfaces of two opposed cones, and being initially tensioned and held under equal tension when the mounting is not loaded.

Such a mounting can be loaded either axially, i.e. with the weight of the supported body acting in the direction of the axis of the columnar member, or radially, i.e. with the weight of the supported body acting radially and at right angles to the axis of the columnar member. Moreover, by suitable choice of the angle of inclination to the base member of the generating lines of the cones the mounting may be arranged to offer substantially equal resistance to movement between the base member and the columnar member in all planes.

With a view to protecting the mounting against sudden accelerations in the axial direction, it is customary to provide stop plates on the ends of the columnar member which will contact with the base member to limit the axial movement of the columnar member in relation to the base member. In the mounting described in my British specification No. 740,519 there are provided, in addition, spring leaves above the lower stop plate and below the upper stop plate which will, by contact with the base member, absorb accelerations before the mounting bottoms, i.e. before either of the stop plates comes into contact with the base member.

Hitherto radial movement of the columnar member in relation to the base member, in response to sudden accelerations in the radial direction, has been arrested by contact of a collar surrounding the columnar member with the inner faces of the springs and this involves the risk of over-stressing of the springs when the mounting is subject to heavy radial shock loads.

The invention provides an anti-vibration mounting of the above type which includes a spring buffer, mounted on a portion of the columnar member which extends beyond the two sets of helical springs, for limiting the radial movement of the columnar member in the event of radial shock loads.

Where, as in the case of the mounting described in British specification No. 740,519, the base member is constituted by a pot, the spring buffer may be constituted by an inner casing attached to the columnar member, a surrounding outer casing and a system of springs disposed between the casings. In response to radial shock loads, movement of the outer casing will be arrested by the pot and thereafter the inner casing will move in relation to the outer casing against the springs until it is arrested by the outer casing.

In an alternative construction, the spring buffer is arranged to coact, for the purpose of limiting the radial movement of the columnar member, with a fixed structure separate from the base member.

The invention includes, as an accessory for attachment

to an anti-vibration mounting of the above type, a spring buffer comprising concentric inner and outer casings, the inner casing being adapted for attachment to the columnar member of the mounting, and a system of springs mounted between the two casings and serving to urge them apart.

Certain alternative forms of anti-vibration mounting according to the invention will now be described in detail, by way of example, with reference to the drawings in which:

FIG. 1 is a vertical section through one form of mounting,

FIG. 2 is an end elevation, partly in section, looking from the left hand side of FIG. 1,

FIGS. 3 and 4 are views similar to that of FIG. 2 showing alternative forms of spring buffer,

FIG. 5 is a vertical section through another form of mounting, and

FIG. 6 is a section on the line VI—VI in FIG. 5.

Like reference numerals designate like parts throughout the figures.

The mounting shown in FIGS. 1 and 2 is of the general construction described in British specification No. 740,519. The base member of the mounting is constituted by a pot **20** having an outwardly flanged base **21** for securing it to a support **10**. The pot has a central opening at its other end and carries on its end surfaces an annular plate **22** having on it projecting fingers **23** which support a wire ring **24**, the plate **22** being held in position by inwardly turned projections **25** on the pot. The columnar supported member of the mounting is constituted by a tube **26** carrying at its opposite ends plates **27** supporting wire rings **28**. Inside the tube **26** is a bolt **11** to which is attached, by a nut **12**, the object **13** to be supported by the mounting. The tube **26** is supported in relation to the pot **20** by two sets of helical wire springs **29**, the ends of which are looped over the wire rings **24**, **28**. The springs **29** are initially tensioned and are held under equal tension when the mounting is not loaded. They are arranged on the surfaces of two opposed cones, the generating lines of which are preferably inclined to the end surface of the pot at an angle, usually 30–40°, such that the mounting offers substantially equal resistance to movement between the pot **20** and the tube **26** in all planes.

The tube **26** carries at its ends stop plates **30**, **31** each having four outstanding fingers, which serve to limit the axial movement of the tube in relation to the pot. Adjoining the stop plates are spring leaves **32** which protect the mounting against shock loads in the axial direction as described in British specification No. 740,519.

The mounting includes a vibration damper, constituted by four radially extending buttons **34** which are held by compression springs **35** in contact with the inner surface of the pot. As shown, the shanks of the buttons **34** are accommodated in sleeves **36** on the bottom stop plate **31**.

To protect the mounting against shock loads in a radial direction the bolt **11** carries a spring buffer **14**. This consists of an inner casing constituted by members **15**, **16** fitted to the bolt **11**, an outer casing consisting of a cup **17** and a plate **18** to which the cup is held by bent-over lugs **19**, and three leaf springs **37** of U-form mounted as shown with their central portions bearing against the cup **17** and their ends engaging radially extending projections **38** on the member **16**.

Should the mounting receive a heavy radial acceleration, the cup **17** will move into contact with the interior of the pot **20** and thereafter the inner casing **16** can move in relation to the cup **17** against the action of the springs **37** until finally one of the projections **38** comes into contact with the inner surface of the cup **17** to limit the movement.

The spring buffer **14** may take other forms, as shown

in FIGS. 3 and 4. In FIG. 3 the inner member of the buffer is constituted by a spider and the springs are coiled springs **39** surrounding the limbs **40** of the spider, the radial movement of the mounting being arrested by contact of one of the limbs **40** with the inner face of the cup **17**. In FIG. 4, coiled springs **39** are also used, these being accommodated in radial slots **41** in the inner member **42** of the buffer which is a die casting of circular shape.

The mounting shown in FIGS. 5 and 6 is of the construction described in United States Patent No. 2,600,090, the base member being constituted by an annular plate **120** mounted on a fixed support **10**. The spring buffer **14** includes an outer shell **43** attached to a fixed support **44**, an annular member **45** mounted inside the shell **43**, a sleeve **46** mounted on the bolt **11** and two sets of coiled springs **39** extending radially between the sleeve **46** and the shell **43** through slots in the member **45**. Two further sets of coiled springs **47** extend axially between the ends of the member **45** and collars **48**, **49**. The collar **48** is integral with the sleeve **46** while the collar **49** is a separate member mounted on the bolt **11**.

The springs **47** assist in damping radial movements of the mounting and a limit is set to the radial movement under shock loads by contact of the sleeve **46** with the inner surface of the member **45** after the springs **39** have been sufficiently compressed.

The various types of spring buffer illustrated fulfill the primary purpose of protecting the mounting against radial shock loads. They also serve a useful purpose when the mounting is loaded axially. When several mountings are mounted beneath a load having a high centre of gravity, e.g. beneath the corners of a large object, the object has a tendency to sway and therefore to move the columnar members of the mountings out of alignment with their respective base members. The spring buffers serve to counteract this tendency.

I claim:

1. A shock mount comprising an apertured base plate, a columnar member having a tube and a bolt partially circumscribed by said tube extending centrally through the aperture in the base plate, two sets of helical springs, one set on each side of said base plate, said springs extending between and being secured at opposite ends to said base plate and to said tube respectively, a spring buffer assembly, a pot and a vibration damper assembly, said spring buffer assembly surrounding a portion of said columnar member which extends beyond said sets of helical springs, said spring buffer including an inner member attached to said bolt, an outer member surrounding said inner member, and springs normally holding said outer member spaced from said inner member, and said inner and outer members moving toward contact when said mount is subjected to radial shock loads which brings the outer member in contact with a surface of said pot thereby to limit the radial movement of said columnar member in relation to said base plate, said pot circumscribing in spaced relation said spring buffer assembly and in abutting relation with a portion of said vibration damper assembly, and said vibration damper assembly having at least two movable buttons held in contact with a surface of said pot.

2. A shock mount comprising an apertured base plate, a columnar member having a tube and a bolt partially circumscribed by said tube extending centrally through the aperture in the base plate, two sets of helical springs, one set on each side of said base plate, said springs extending between and being secured at opposite ends to said base plate and to said tube respectively, a spring buffer assembly, a pot and a vibration damper assembly, said spring buffer assembly surrounding a portion of said columnar member which extends beyond said sets of helical springs, said spring buffer including an inner member attached to said bolt, an outer member surrounding said inner member, and leaf springs of an arcuate configuration normally holding said outer member spaced from said inner member, and said inner and outer members moving toward contact when said mount is subjected to radial shock loads which brings the outer member in contact with a surface of said pot thereby to limit the radial movement of said columnar member in relation to said base plate, said pot circumscribing in spaced relation said spring buffer assembly and in abutting relation with a portion of said vibration damper assembly, and said vibration damper assembly having at least two movable buttons held in contact with a surface of said pot.

References Cited in the file of this patent

UNITED STATES PATENTS

712,688	Krank	Nov. 4, 1902
2,838,267	Wells	June 10, 1958
2,924,419	Wells	Feb. 9, 1960

FOREIGN PATENTS

740,519	Great Britain	Nov. 16, 1955
761,428	Great Britain	Nov. 14, 1956