April 16, 1957 G. EVEN 2,788,713

ARMORED VEHICLE

Filed Oct. 29, 1954 3 Sheets-Sheet 1

FIG. 1

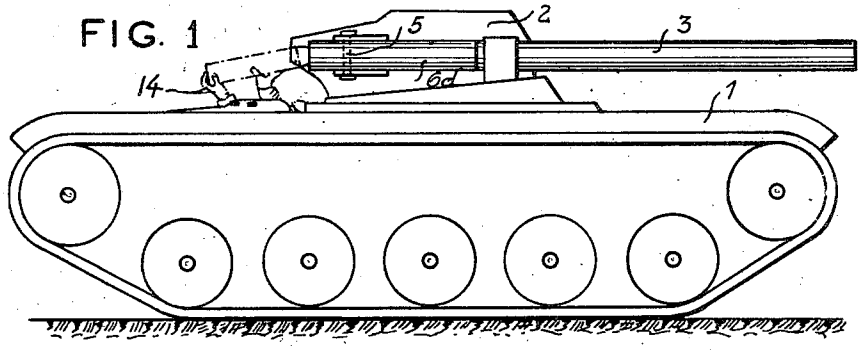

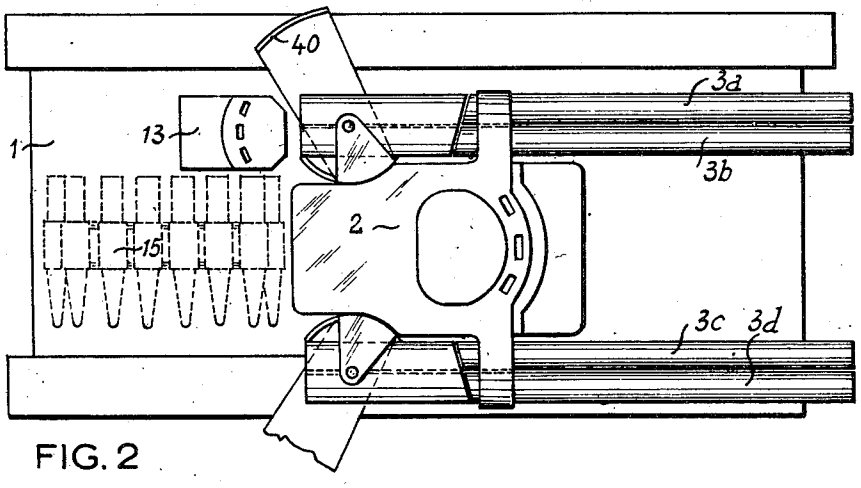

FIG. 2

Inventor
G. Even
By Glascock Downing Seibold
Attys.

April 16, 1957 G. EVEN 2,788,713

ARMORED VEHICLE

Filed Oct. 29, 1954 3 Sheets-Sheet 2

FIG.3

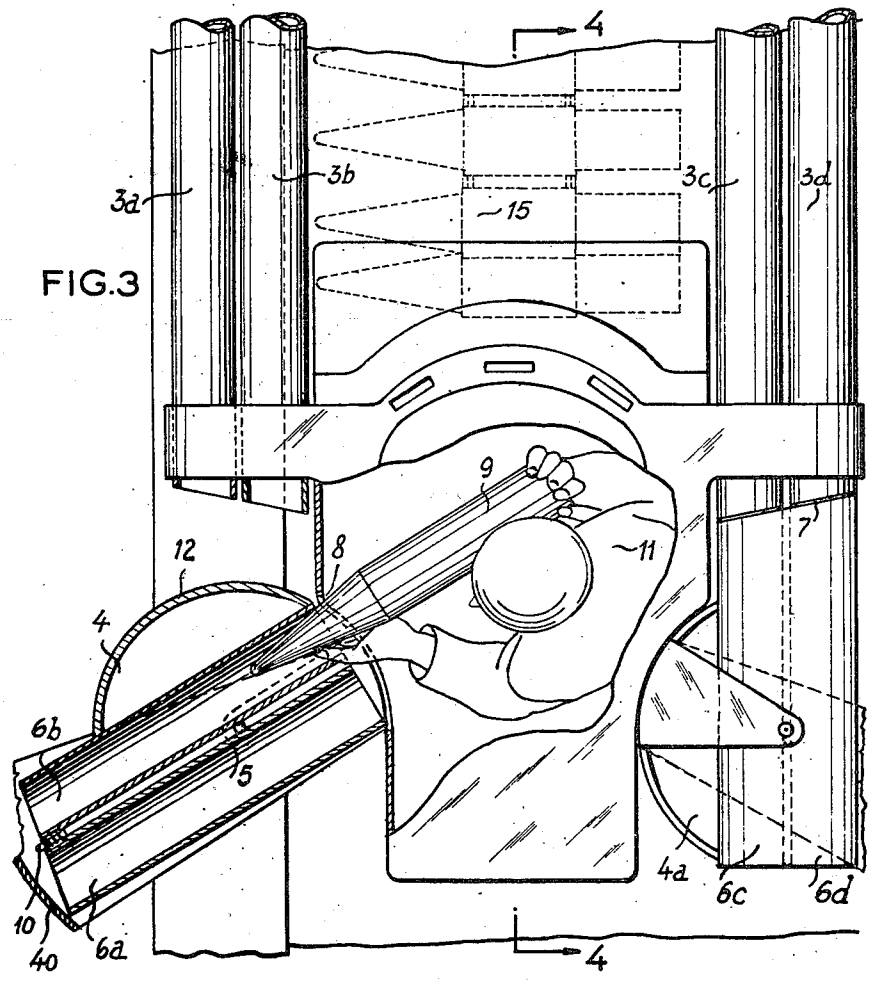

Inventor
G. Even
By Glascock Downing Seebold
Attys.

April 16, 1957 G. EVEN 2,788,713

ARMORED VEHICLE

Filed Oct. 29, 1954 3 Sheets-Sheet 3

FIG. 4

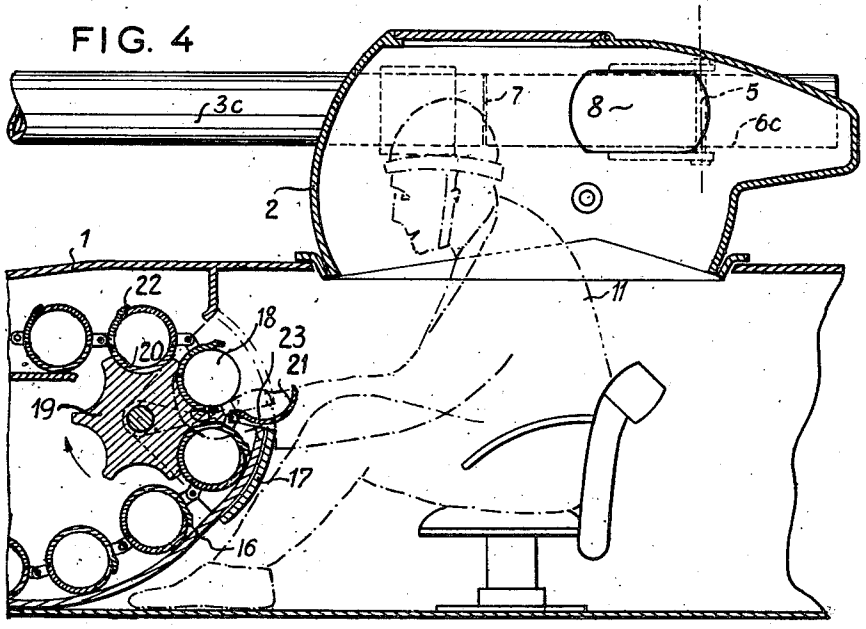

FIG. 5

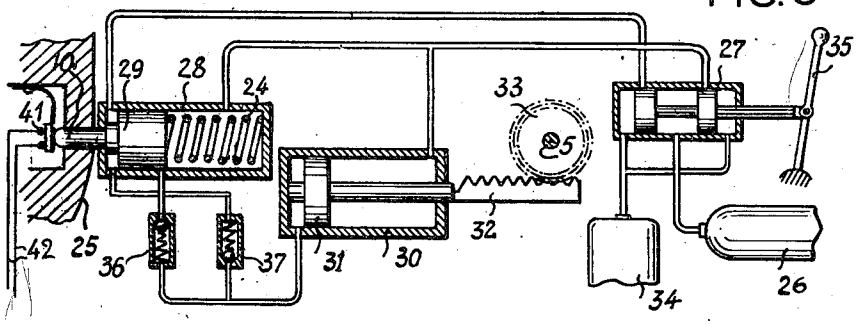

Inventor
G. Even
By Glascock Downing & Seibold
Attys

United States Patent Office 2,788,713
Patented Apr. 16, 1957

2,788,713

ARMORED VEHICLE

Georges Even, Paris, France

Application October 29, 1954, Serial No. 465,704
Claims priority, application France February 16, 1954
6 Claims. (Cl. 89—36)

This invention relates to armored vehicles of the type equipped with at least one weapon having its loading end located outside the armoring.

In armored vehicles of this type, it is essential that the weapons may be loaded from inside the cockpit so that the operator has not to expose himself for this purpose.

In my patent application Ser. No. 304,079, filed August 13, 1952, I have described an armored vehicle having a turret on which each weapon is fixedly secured, the roof of the said vehicle being provided with an opening equipped with a removable armored cover and off-set with respect to the axis of the turret by a distance substantially equal to the pivoting radius of the said weapon.

With this arrangement, an operator of the armored vehicle can load external weapons, while he remains protected inside the armoring. However, the operator still has to expose his forearms as he passes the projectiles through the above-mentioned opening. Moreover and incidentally, this arrangement is only possible in turret vehicles.

The purpose of this invention is to provide in an armored vehicle of any type having at least one weapon of which the loading end is located outside the armoring, a new arrangement for loading the said weapon from inside the armoring, this arrangement being such that the loading operator remains entirely protected inside the vehicle, without having to expose even his forearms.

In the following specification, a tubular element provided for guiding a projectile will be called "a tube," this term being intended to cover any type of such guiding elements such as rocket-tubes, gun-tubes, or even tubular elements solely constituted by two spaced coaxial ring members, and so on.

Such a "tube" is necessarily fixedly secured either directly on the vehicle or on a carrying member such as a turret supported in turn, e. g. pivotally, on the vehicle. In the following specification and claims the expression "carrying member" will be used to designate both cases indifferently, while the illustrative description will refer more particularly to "tubes" mounted on a turret.

The main object of the invention is to cut such a tube into two separate portions, aligned in firing position, only the front portion being fixedly secured on the carrying member, while the rear portion is so mounted thereon that one of its ends can be brought in front and in the near vicinity of a hole provided in the armoring, in such a position that a projectile may be introduced through the said hole into the said tube rear portion.

In the case of continuous tubes, both portions will be not only aligned, but also interconnected, in firing position, and it is clear that this interconnection requires a length of the rear portion at least equal to that of the projectile since, otherwise the latter would project after loading out of the said rear portion and prevents resetting of the same into alignment with the front portion.

In certain cases, however, in particular, if a tube is short enough, it will become possible to mount the said tube as a whole for displacement on the carrying member, in such a manner that its loading end can be brought in front of the loading hole of the armoring. This particular simpler case will not be described in the specification but it is to be considered as within the scope of the invention as defined in the appended claims in which the expression "at least the rear portion of the tube" will be used to cover the rear portion of a two-piece tube as well as a one-piece tube displaceable as a whole on the carrying member.

A more specific object of the invention is to mount the tube rear portion pivotally on the tube carrying member, e. g. around an axis orthogonal to that of the tube, so that one end of the said rear portion can be brought in front and in the near vicinity of the loading hole of the armoring by an angular displacement around said axis.

A further object of the invention is to provide the movable, e. g. pivoting portion with armoring means adapted to mask and protect the loading hole, in particular, when the tube rear portion is in firing position.

A still further object of the invention, in the case when the vehicle is provided with several weapons is to mount the rear portions of a plurality of tubes fixedly on a common support pivotally mounted in turn on the carrying member, the arrangement being such as to permit successively or selectively introducing projectiles into each one of the tube rear portions.

In a particular embodiment, the pivoting support is articulated about an axis located behind its center, and the contact surface between the front end and rear portions of each tube, has such a shape that the rear end of each tube portion to be loaded may be brought into loading position by an angular displacement smaller than 180°.

A particular object of the invention is to combine the same with the arrangements described in the above cited reference, in particular in a two-operator turret-armored vehicle, one of the operators then loading the weapons through the loading hole according to this invention, while the other operator may also load the weapons, but through the opening of the vehicle roof, as described in said reference.

Still another object of the invention is to design the ammunition chain described in the said reference in such a manner that each of the two operators may easily seize projectiles as he needs them, the said projectiles being automatically brought step by step to his disposal by the said chain.

In a preferred embodiment, the said ammunition chain is so disposed that the projectiles extend with their axes substantially normal to the mid-longitudinal plane of the vehicle, so that the operator housed in the turret can take a projectile from the chain with his both hands by lifting the said projectile in a direction substantially normal to its axis, while the other operator can take a projectile from the chain by sliding it in a direction substantially parallel to its axis.

Any desired control means may be provided within the scope of the invention to automatically pivot a tube rear portion to be loaded, said means being completed, if desired, by devices for locking the said tube rear portion in firing position and also, if required, in loading position.

It is, however, a particular object of the invention to provide the pivoting system with a specially designed hydraulic control circuit.

Still a more particular object of the invention is to lock a tube rear portion in firing position by means of

a spring-loaded bolt automatically locked as the said tube rear portion is brought into firing position, while the hydraulic control circuit is so designed as to ensure successively and in this order, positive unlocking, pivoting of the system into loading position and automatic blocking of the system in the said loading position.

The invention will be better understood with reference to the following detailed description, together with the accompanying drawings, submitted for purpose of illustration only and not intended to define the scope of the invention.

In these drawings:

Fig. 1 is a diagrammatic side elevational view of an armored vehicle according to the invention.

Fig. 2 is a tip view of the same.

Fig. 3 is a partial enlarged top view showing in which manner a weapon is loaded with the arrangement according to the invention.

Fig. 4 is a longitudinal sectional view along line 4—4 of Fig. 3.

Fig. 5 is a lay-out of a hydraulic circuit for controlling a pivoting system of an armored vehicle according to the invention.

In the example shown in Fig. 1, the armored vehicle comprises, as in the above mentioned reference, an armored body **1**, a turret **2** pivotally mounted on the said body and a number of weapon tubes **3** secured on the turret **2** outside the same.

In this example, as more clearly shown in Fig. 2, the vehicle is equipped with four tubes disposed pairwise on either side of the turret **2**, as shown at **3***a*—**3***b* **3***c*—**3***d*.

According to the invention, a support **4** which, in the example shown, is pivotally mounted on the turret **2** around an axis **5**, right-angles with the fire line, carries the rear portions **6***a*—**6***b* of the tube pair **3***a*—**3***b*, another similar pivoting support **4***a* carrying the rear portions **6***c*—**6***b* of the other tube pairs **3***c*—**3***d*.

In Fig. 3, the tube rear portions **6***c*—**6***d* have been shown in their firing position in which they are aligned with the remaining front portions of the tubes **3***c*—**3***d* with which they are interconnected in a plane inclined with respect to the axis of the tubes. This contact plane could be also a cylindrical surface. The inclination of this plane with respect to the axes of the tubes must be sufficient to permit the front ends of the rear portions to escape outwardly as the support is pivoted, so that the rear ends of the said portions can be brought into loading position, as shown in Fig. 3 for the rear portions **6***a*—**6***b*, by a rotation smaller than 180°. In this loading position, the rear ends of the tube rear portions are located in front and in the near vicinity of the armoring of the turret **2** and according to the invention a hole **8** is provided in the said armoring to permit introducing therethrough a projectile **9**, e. g. into the tube rear portion **6***b*, as shown in Fig. 3 and then, if desired, another projectile into the tube portion **6***a*, after a suitable additional angular displacement (anti-clockwise, in the drawing) of the pivoting support **4**. It goes without saying that another similar loading hole (not shown) is provided to accommodate projectiles for loading the other tubes **3***c*—**3***d*. In this example, the length of the pivoting rear tube portions is at least equal to that of the projectile, so that, after having been introduced into a rear tube portion in the manner described above, said projectile is entirely housed therein. Once the loading operation is completed, it suffices to pivot the support **4** (clockwise, in the drawing) to bring the tube rear portions back into firing position. However, it will be easily understood that it is indispensable to provide locking facilities between the pivoting tube rear portions and the remaining front portions of the tubes in firing position, to ensure a safe alignment of the weapon bores.

In Fig. 3, such a locking device has been diagrammatically shown under the shape of a bolt **10**. An illustrative embodiment will be described in detail hereunder with reference to Fig. 5.

It is clear that the above described arrangement permits an operator **11** to load the weapons without exposing any part of his body.

According to another feature of the invention, a curved armoring plate **12**, the axis of which coincides with the pivoting axis **5** is provided to mask the hole **8** when the tube rear portions **6***a*—**6***b* are not in front of the said hole and in particular when they are interconnected with the remaining portions of the tubes **3***a*—**3***b* in firing position. Thanks to this arrangement, the operator **11** is protected, not only as mentioned above, as he loads his tubes, but also at any other time. It is also possible to provide a fixed armoring plate, as partially shown at **40**, for protecting the tube portions themselves in loading position. It is clear that these additional armoring means may be also provided for the other tubes **3***c*—**3***d*.

In the example shown, the loading arrangement according to the invention has been combined with that previously described in the above cited reference. There is shown at **13**, in Fig. 2, the covered opening provided in the roof of the body **1** and through which another operator of the vehicle, housed outside the turret, may load the tubes after the rear end of the same has been brought over the said opening by a pivoting motion of the turret **2**, as shown at **14** in Fig. 1. Thus, in the two-operator turret armored vehicle shown as an illustration, either one of the operators may load the weapons. Moreover, it will be easily understood that in order to facilitate the loading of the tubes **3***c*—**3***d* through the opening **13** of the roof, the rotation of the turret may be combined, if desired, with the pivoting motion of the support **4***a*.

According to another feature of the invention, the ammunition chain generally shown at **15** in Fig. 2, is so designed that both operators may easily seize the projectiles they want. For this purpose, in addition to the facilities described in the above cited reference, permitting that operator who uses the opening **13** to load the weapons, to seize the projectiles fed step-by-step by the chain **15** and take them therefrom by a sliding motion in a direction substantially parallel to their axis, the ammunition chain is further so designed, according to the invention, that the projectiles are also brought in front of the other operator **11** who can seize a projectile with both hands and take it from the chain by a lifting displacement during which the projectile remains substantially parallel to itself.

For this purpose, the casing **15** of the ammunition chain is provided with a removable cover **17** that, in the position shown in Fig. 4, gives access to one of the projectiles **18** previously brought into registration with the gap exposed by the opening of the cover **17** under the action of the step-by-step driving device **19** described in the cited reference.

According to a constructive feature of this invention, each projectile **18** is housed in a box constituting one link of the ammunition chain. The said box comprises a substantially semi-cylindrical fixed portion **20** and a cover-like portion **21** so hinged that it may be either elastically locked, as shown in **22**, on the fixed portion, or opened, as shown in **23**, under the manual action of the servant **11**, whereupon, as the chain is driven farther by the device **19**, the said cover is automatically snapped by the casing **16** and locked again elastically in closed position. Fig. 5 shows a lay-out of a hydraulic system ensuring, on one hand, the pivoting motion in both directions of the support carrying the tube portions to be loaded and, on the other hand, the positive unlocking of a bolt such as the previously mentioned bolt **10**, the locking of said bolt taking place automatically under the action of a spring **24** as the tube portions are brought into firing position, after momentaneous withdrawal of the bolt

under the cam effect of a surface 25 provided on the fixed portions of the tubes.

In the example shown, the said hydraulic system essentially comprises a source of pressure fluid such as an accumulator 26 feeding, under the control of a distributor 27, a jack 28, the piston 29 of which is fast with the bolt 10. A second jack 30, fed in series with the first one, is operatively connected through its piston 31 with a rack 32 meshing with a toothed-wheel 33 rotatively fast with the support 4 pivoting about the axis 5, as previously described. Finally, there are shown at 34 the tank and at 35 the control lever of the distributor 27. It is clear that except for the jack 28 necessarily rotatable with the rear portion of the tube, the other elements of the hydraulic system will be preferably fixed and disposed within the armoring. In this case, the hydraulic transmissions will include suitable rotating joints (not shown). As shown in Fig. 5, when the lever 35 is in neutral position, none of the jacks is fed and the bolt 10 is held in locked condition by its spring 24. If now, the lever 35 is pivoted anti-clockwise, the jack 28 is first fed, on the left side of its piston, which causes withdrawal of the bolt 10 against the action of the spring 24 and then, only when the said unlocking is completed, the jack 30 is fed in turn, which causes a rotation of the pivoting support bringing the rear portion of the tube into loading position. When one tube rear portion has been brought into the suitable position in front of the loading hole of the turret wall, it suffices to bring the control lever 35 into neutral position again for blocking the said tube rear portion in loading position.

Conversely, if the lever 35 is pivoted clockwise from the neutral position, both jacks are fed in parallel on the right side of their pistons to rotate the pivoting support through the rack 32 to thereby bring the tube rear portions back into firing position, the bolt 10 being moreover urged towards its active position under the combined action of the pressure fluid and the spring 24. When the tube portions have been brought into firing position, the bolt 10 is thus automatically locked under the action of the fluid pressure after having been momentarily withdrawn, due to the above mentioned cam effect. In order to ensure series operation of the jacks 28—30, the conduit interconnecting the same is duplicated and two non-return valves 36, 37 are interposed respectively in each arm of the said double conduit, one of the said valves opposing fluid flow from the jack 28 towards the jack 30, while the other one opposes fluid flow from the jack 30 towards the jack 28. Moreover, in the jack 28, the openings of the arms of the double conduit are so disposed that, in the position shown in Fig. 5, the piston 29 obturates the conduit feeding the jack 30 from the jack 28, while the other conduit ensuring return of the fluid, then communicates the jack 30 with the jack 28, which permits series unloading of both jacks, while in the withdrawn position of the piston 29, both arms of the double conduit freely communicate with the jack 28, which permits ensuring series feeding of both jacks through the conduits provided with the non-return valve 36.

To prevent a projectile from being fired in a tube rear portion, as the same is not safely locked in firing position, there is provided an electric contact 41 closed by the bolt 10, as the same is driven home in its housing, the said contact being interposed in the firing circuit 42.

It is to be understood that, while the invention has been described with particular reference to preferred embodiments, it is not intended to limit the scope of the invention to the embodiments illustrated, nor otherwise than by the terms of the subjoined claims.

In particular, it is obvious, that the above described hydraulic system may be inverted, if desired, so as to have all its elements, including the jack 28 fixed with respect to the tube carrying member, the bolt 10 being then located on the fixed portion of the tube while its striking-box would be secured on the pivotable rear portion. This would permit suppressing the above mentioned rotating joints.

What is claimed is:

1. In an armored combat vehicle comprising a hollow body having a top wall and a turret mounted thereon for rotation about a vertical axis, at least one gun barrel having a main section supported by said turret externally thereof so as to extend in a substantially tangential direction relative to said turret and a loading section movable with respect to said main section, a rotatable support for said loading section carried by said turret and arranged so as to swing said loading section between a position in which it is in alignment with said main section and a position in which it extends in a substantially radial direction relative to said turret, means for controlling the rotation of said support from one of said two positions to the other, and an opening in the side wall of said turret in alignment with said radial direction to permit loading of said loading section from within said turret when said support has been rotated to align said loading section with said opening.

2. An armored combat vehicle according to claim 1, in which the main sections of two parallel gun barrels are supported by said turret each at one of two opposite sides thereof, said turret being provided with two loading openings each formed at one of said two opposite sides.

3. An armored combat vehicle according to claim 1, in which the main sections of at least two parallel gun barrels are supported by said turret at each of two opposite sides thereof, said turret being provided with two loading openings each formed at one of said two opposite sides and each permitting the successive loading of the barrels located on the same side of the turret as the opening.

4. An armored vehicle according to claim 1, wherein the said rotatable support carries an arcuate protecting plate concentric to the axis of said support and adapted to mask the said loading opening as long as the said loading section of the barrel is not in alignment therewith.

5. An armored vehicle according to claim 1, wherein the said vehicle body carries an arcuate protecting plate extending concentrically to the axis of said support so as to mask the front portion of said loading section of the barrel when said loading section is in alignment with said opening.

6. An armored vehicle according to claim 1, wherein a spring loaded bolt is provided to automatically lock said support against rotation when the loading section of the barrel is in alignment with the main section thereof, said vehicle further comprising a hydraulic system to control unlocking of said bolt and rotation of said support, said system including a source of pressure liquid, a tank, a hand-controlled distributor, a first hydraulic jack, a rack fast with the piston of said jack, a toothed-wheel meshing with said rack and rotatably fast with said support, a second hydraulic jack having its piston fast with said bolt, and liquid conducting means including rotating joints and non-return valves to communicate said jacks with said pressure liquid source and tank through said distributor, said liquid conducting means and said valves being arranged so as to allow feeding of said first jack only when said second jack has brought said bolt into unlocking position.

References Cited in the file of this patent

UNITED STATES PATENTS

2,460,321	Walker	Feb. 1, 1949
2,573,434	Graham	Oct. 30, 1951
2,649,840	Davidson	Aug. 25, 1953

FOREIGN PATENTS

672,346	Great Britain	May 21, 1952