Jan. 21, 1941. S. J. WINSLOW 2,229,202

HAND MIRROR BACK AND THE LIKE

Filed Feb. 5, 1940

FIG. 1.

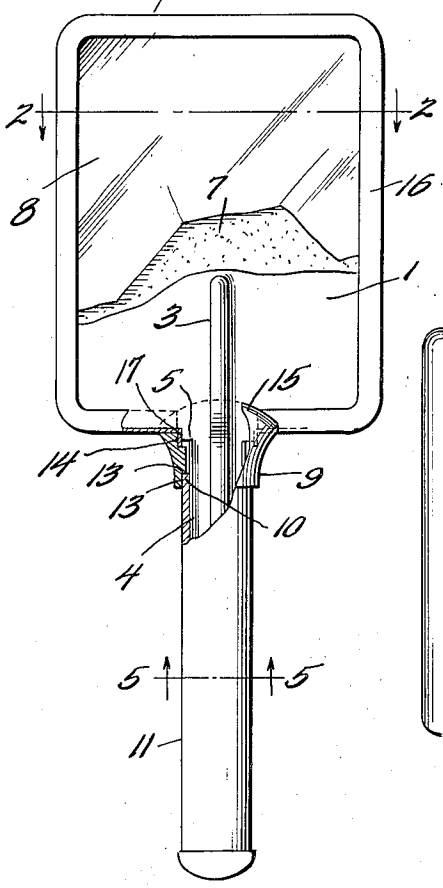

FIG. 2.

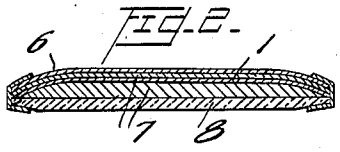

FIG. 3.

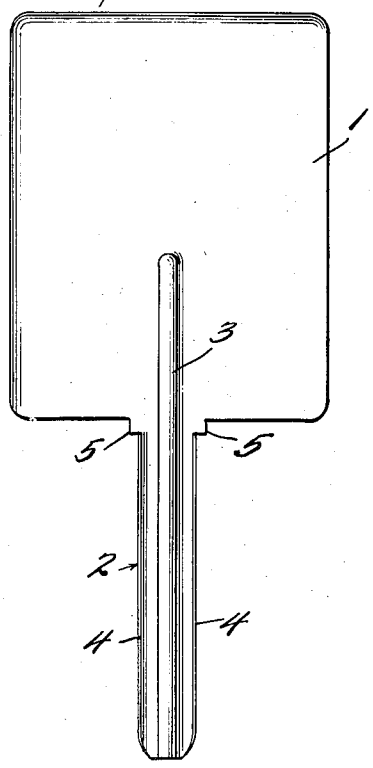

FIG. 4.

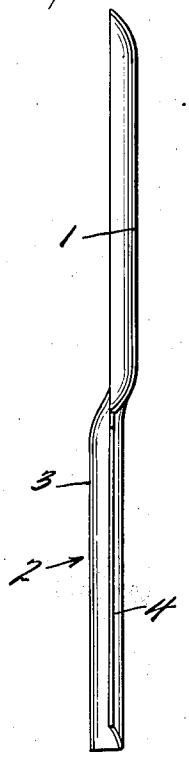

FIG. 5.

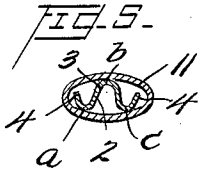

FIG. 6.

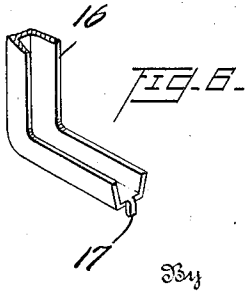

FIG. 7.

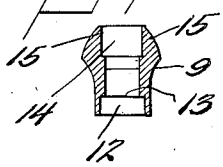

Inventor

Samuel J. Winslow,

By Parker Cook.

Attorney

Patented Jan. 21, 1941

2,229,202

UNITED STATES PATENT OFFICE

2,229,202

HAND MIRROR BACK AND THE LIKE

Samuel J. Winslow, Taunton, Mass., assignor to National Silver Company, New York, N. Y., a corporation of New York

Application February 5, 1940, Serial No. 317,436

2 Claims. (Cl. 88—102)

My invention relates to new and useful improvements in hand mirrors, brushes, and similar articles, and has for an object to provide a rigid backing or body wherein a handle and body portion are integral, and to further provide a throat that will cooperate with the body and also with the split frame or band that holds the mirror to the body. This throat furthermore cooperates with the decorative sleeve which is placed over the metal handle of the body.

As is well known to those skilled in the art, hand mirrors and brushes generally have a metal backing or body made of relatively inexpensive and strong metal, an ornamental back plate, and a split frame for holding the component parts together.

One of the principal objects of the present invention is to provide a strong metal body having an integral shank or handle, which thus necessitates but one set of dies in the manufacture and which body and handle are strengthened at their point of merger, and to further provide a special throat to cooperate with the split enclosing frame, metal back, and decorative handle.

A further object of the invention is to provide a body and handle made of relatively inexpensive sheet metal and to provide a longitudinal corrugation extending the length of the handle and up into the body to thereby materially strengthen the body and handle and to also provide three frictional surfaces in the handle to cooperate with the decorative sleeve that is applied to the handle.

Still another object of the invention is to provide a hand mirror assembly wherein a special throat is provided to, in turn, receive a split frame, which is provided with ears, that will be jammed tightly within the throat when the parts are assembled.

Still another object of the invention is to provide a mirror assembly wherein only one set of dies is necessary for making the body and handle to thus hold down the cost of manufacture.

Still another object of the invention is to provide a mirror assembly which will be relatively strong in service and wherein there is no solder or welding to be done to hold the several component parts together.

With these and other objects in view, the invention consists in certain new and novel features and combination of parts, as will be hereinafter more fully explained and pointed out in the claims.

Referring now to the drawing showing a preferred embodiment,

Fig. 1 is a view partly in elevation and partly in section of my improved construction, part of the decorative sleeve being broken away to show the internal construction of the throat;

Fig. 2 is a sectional view taken on the line 2—2 of Fig. 1 and showing the filler or backing between the mirror and its frame;

Fig. 3 is a front view of the backing or body and showing the corrugation extending the length of the handle and up into the head of the body;

Fig. 4 is a side elevation of Fig. 3;

Fig. 5 is a sectional view taken on the line 5—5 of Fig. 1, showing the frictional manner in which the sleeve is engaged on the handle;

Fig. 6 is a detail fragmentary view of the split frame; and

Fig. 7 is a sectional view of the throat member taken at right angles to Fig. 1.

Referring now for the moment to Figs. 3 and 4, there is shown a metal backing or body plate, which consists of the main body 1 and the handle 2. This plate is stamped from relatively inexpensive but strong metal sheets and may be made from the one set of dies. It will be noticed that the handle 2 is an integral portion and there is provided the main longitudinal corrugation 3, which extends centrally throughout the length of the handle and nearly halfway the length of the body.

Furthermore, besides this central corrugation in the handle, the metal is then turned back along its opposite edges, as at 4. This may be seen in Fig. 5 in cross section. Also where the handle merges with the body may be seen the two ears 5, which cooperate with a throat member, shortly to be described.

The body 1 is slightly dished or curved transversely of its width, as may be seen in Fig. 4, so that when the rear decorative plate 6 together with the fillers 7 are pressed against the mirror 8, the shape and resiliency of this backing plate will tend to keep the parts tightly together.

As far as the specifications has proceeded, it will be seen that I have provided an extremely strong body with an integral handle, while the longitudinal corrugation greatly strengthens the handle, the lower end of the body, and especially the plane where the body merges with the handle.

Referring now to what I term the throat member 9, it will be seen that this is formed of thicker metal, which may be decorated on its exterior surface to match the decorative plan of the sleeve and is of a sufficient internal diameter

to permit the upper end 10 of the hollow oval-shaped sleeve 11 to be jammed tightly within the throat.

The throat internally is cut out at its sides for this purpose, as at 12, and to form the resultant stops 13.

In a like manner, the throat is cut out slightly, as at 14, just below its upper surface to form chambers or pockets for the ears or tabs of the split frame, which will be shortly mentioned.

The throat member on each side at its top has portions extending above its normal surface to provide ears 15, which grasp and hold the split frame, mirror, and its backing in a tight fit with the throat member.

Referring now for the moment to Fig. 6, there is shown a fragmentary portion of a split frame 16, which may be of channel shape and is provided on its two ends with the small integral depending ears 17.

It will be understood that I show both the main body plate and the split frame as being rectangular in outline, but as it is well known, the mirror and its frame may be oval or of any other desired shape.

The sleeve 11, as heretofore mentioned, may be decorative and may be lacquered or otherwise finished to be in harmony with the finish of the throat and also the decorative back plate 6 of the mirror assembly, as is well understood.

It will be noticed when the parts are to be assembled that the split frame, of course, will be crimped about the mirror, fillers, body, and backing plate, while the small ears 17 will be jammed in the pockets 14 and abut against the ears 5 formed on the main body or back. Likewise, the ears 15 will engage the opposite ends of the split frame and on their opposite sides, thus tightly holding the several parts together.

The sleeve 11 provides a tight fit with respect to the handle 2 and will have its upper end 10 forced into the aforementioned pockets 12 in the throat. Inasmuch as the depth of the corrugation in the handle is slightly greater than the short internal diameter of the sleeve, it will frictionally contact with the sleeve at the three points *a*, *b*, and *c*, Fig. 5.

Therefore, when the sleeve is forced over the handle 2, it may tend to slightly compress the corrugated handle and thus provide a relatively great amount of friction between this corrugated handle and the sleeve and at all times hold the sleeve rigidly on the handle. At the same time, the upper end of the sleeve will be tightly forced within the receptive pockets of the sleeve and the throat can never slip down on the handle.

Finally, the split ends of the frames will be held tightly together due to being jammed between the pockets of the throat and the ears on the main backing frame. The novel construction of this throat member eliminates the necessity for an extra washer or other mechanical means generally provided in the throat member for holding the ends of the split frame together. Thus, it will be seen that a throat member formed in this manner saves the cost of additional washers and their dies and also saves considerable time in assembly.

From the foregoing, it will be apparent that I have provided a mirror assembly or a brush assembly that is relatively inexpensive to manufacture and wherein the parts may be readily assembled and then the different parts forced into position to thus hold them in their desired rigid assembled position.

As heretofore mentioned, the rectangular frame and mirror are merely illustrative and any desired shaped mirror and frame may be utilized within the spirit of the invention. Likewise, it will be understood that I have not shown any decorations on the back plate or on the sleeve but the same may be provided, if desired, by the manufacturer.

Having thus described my invention, what I claim as new and desire to secure by Letters Patent is:

1. A mirror frame or the like comprising a backing plate formed of relatively thin resilient sheet metal and having a structurally integral handle projecting from the lower marginal edge thereof, said handle having a corrugation extending centrally throughout the length thereof and well into said backing plate to thereby strengthen the line of junction of the plate and handle, a pair of locking ears on said lower marginal edge, one each at the junction of a longitudinal handle edge with said lower marginal edge, a sleeve fitted on said handle and held in rigid frictional contact therewith, a split frame encircling the periphery of said backing plate, said frame having a pair of integral terminal lugs, and a throat member holding said terminal lugs against said locking ears, the upper edge of said sleeve being received within said throat member.

2. A mirror frame or the like comprising a backing plate formed of relatively thin resilient sheet metal and having a structurally integral handle projecting from the lower marginal edge thereof, a pair of locking ears on said lower marginal edge, one each at the junction of a longitudinal handle edge with said lower marginal edge, a sleeve fitted on said handle and held in rigid frictional contact therewith, a split frame encircling the periphery of said backing plate, said frame having a pair of integral terminal lugs, and a throat member holding said terminal lugs against said locking ears, the upper edge of said sleeve being received within said throat member.

SAMUEL J. WINSLOW.