(No Model.)

E. BROWN.

ADJUSTABLE CAN OR JAR HOLDER.

No. 590,963. Patented Oct. 5, 1897.

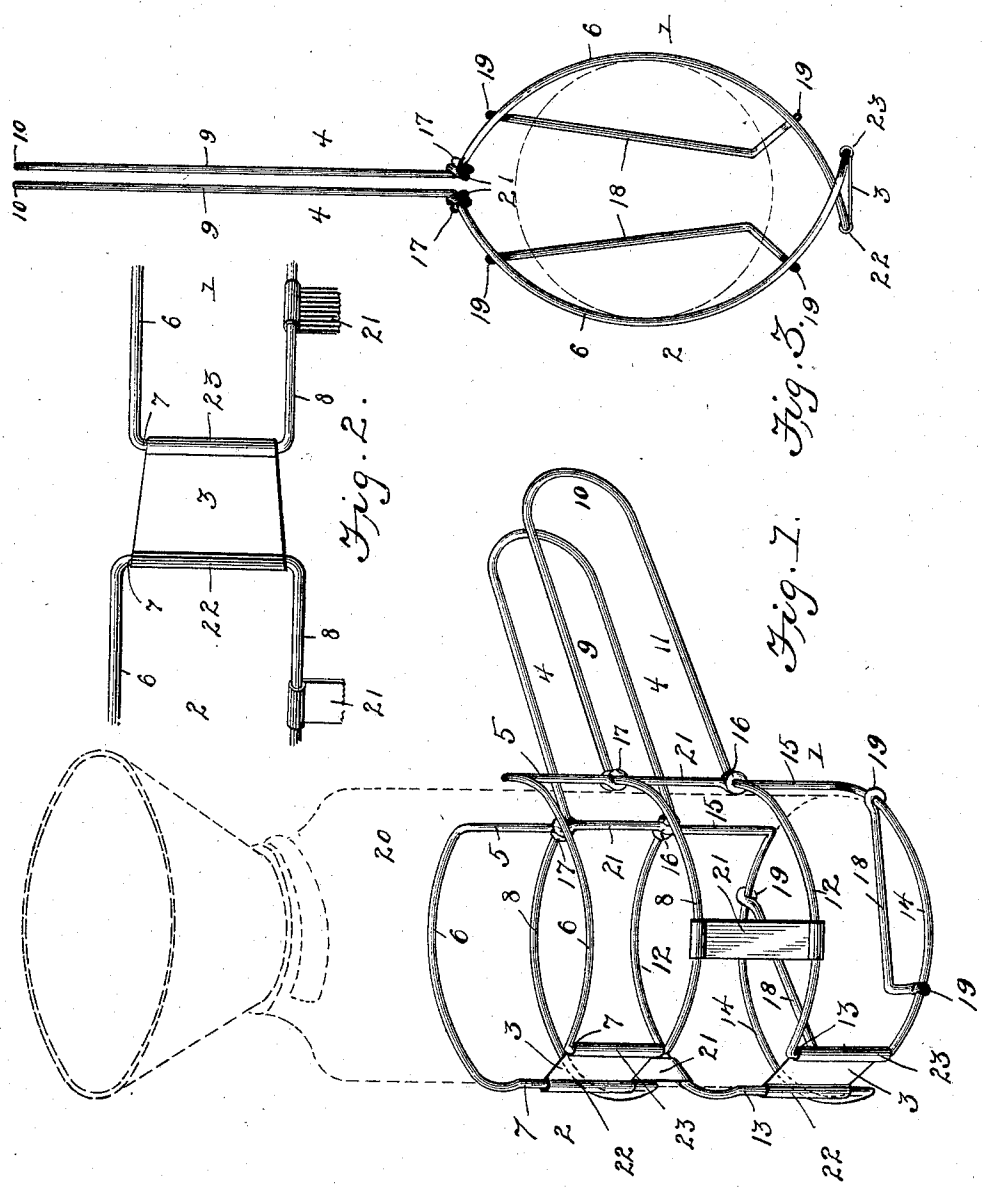

Inventor
Emma Brown

Witnesses
E. H. Monroe.
Edwin Cruse.

By her Attorneys,
C. A. Snow & Co.

THE NORRIS PETERS CO., PHOTO-LITHO., WASHINGTON, D. C.

UNITED STATES PATENT OFFICE.

EMMA BROWN, OF FREEPORT, ILLINOIS.

ADJUSTABLE CAN OR JAR HOLDER.

SPECIFICATION forming part of Letters Patent No. 590,963, dated October 5, 1897.

Application filed February 6, 1897. Serial No. 622,337. (No model.)

To all whom it may concern:

Be it known that I, EMMA BROWN, a citizen of the United States, residing at Freeport, in the county of Stephenson and State of Illinois, have invented a new and useful Adjustable Can or Jar Holder, of which the following is a specification.

This invention relates to can or jar holders which are adjustable in order that they may be used with cans or jars of different sizes during the operation of canning fruit, &c., to prevent burning of the hand and accidents caused thereby.

The objects of the invention are to simplify the construction and mode of operation of the adjusting devices, to make them positive and efficient in action, and at the same time to greatly reduce the cost of manufacture of devices of this character.

With these ends in view the invention consists of the several details of construction and combination of parts hereinafter fully described, and particularly pointed out in the claims.

In the drawings, Figure 1 is a perspective view of the improved can-holder with a fruit-can and filling-funnel indicated in dotted lines in position. Fig. 2 is a front elevation of a portion of the can-holder. Fig. 3 is a plan view of the can-holder in its contracted form.

Similar reference-numerals indicate similar parts in the several figures.

The can-holder consists, essentially, of two sections (indicated by 1 and 2, respectively) connected at their forward ends by hinges 3, and each having a handle projecting from its rear end, as indicated by 4. Each section is made from a single piece of wire bent to the required shape. The bending operation is as follows: One end portion of the wire forms the vertical bar 5, and the wire is then bent at a right angle to form the horizontal bar 6, then again bent at a right angle to form a vertical bar 7, again bent at substantially a right angle to form the horizontal bar 8, and again bent laterally at an obtuse angle to form one horizontal portion 9 of the handle, and then again bent to form a loop 10 and returned to form the other horizontal portion 11 of the handle substantially parallel with the part 9, when it is again bent laterally at an obtuse angle to form the horizontal bar 12, then bent at a substantially right angle to form the vertical bar 13, and then again bent at a right angle to form the horizontal bar 14, and, finally, bent again at a right angle to form the vertical bar 15, the end of which is bent to form an eye 16, which fits over the bar 12 at its junction with the handle portion 11. The other end of the wire is also bent to form an eye 17, which fits over the bar 8 at its junction with the portion 9 of the handle. Each section is similarly formed, with slight exceptions, which will be referred to hereinafter, and the same reference-numerals are applied to the similar parts in each section, the sections being distinguished as a whole by the numerals 1 and 2.

The horizontal bars 6, 8, 12, and 14 are curved longitudinally in substantially semicircular form, as shown, and each section is provided with a horizontal tie-brace 18, formed at each end with an eye 19, which eyes fit over the bar 14 near its ends. These braces prevent the bars 14 from being bent out of shape when pressure is applied to them and also serve as a support for the can, (indicated by 20.) Vertical braces 21 also connect the bars 8 and 12 of each section at a distance of about one-third of their length from the hinges 3 and also at their junction with the handle portion, which braces prevent vertical displacement of the bars 8 and 12 relative to each other. These braces 21 may be either of wire or sheet metal and tie together the horizontal bars, which have no integral connecting vertical bars.

The bars 6, 8, 12, and 14 of section 2 are substantially parallel to each other, but the bars 6, 8, 12, and 14 of section 1 converge slightly toward each other at their front ends, so that the bars 7 and 13 of section 1 are not as long as the similar bars of section 2, and consequently the bars 6, 8, 12, and 14 can fit between the similar bars, respectively, of section 2 when the device is in its contracted form, as shown in Fig. 3. The hinges 3 are formed from strips of sheet metal and taper slightly from end to end, the wide end of each being bent to form a loop 22, which loops embrace the vertical bars 7 and 13, respectively,

of the section 2, and the narrow ends are bent to form loops 23, which embrace the vertical bars 7 and 13, respectively, of section 1.

When the holder is in the position shown in Fig. 1, it is adapted to receive and firmly grasp a two-quart can, and when it is in the position indicated in Fig. 3 it is adapted to receive and firmly grasp a one-quart can, and in order to bring it into the contracted position it is only necessary to move section 1 rearwardly in the direction of its handle and turn its front end in toward section 2 to cause the hinged end of section 1 to extend through between the bars 6, 8, 12, and 14 of section 2, whereby the two ends overlap each other, as shown in Fig. 3, with the several horizontal bars of each section crossing each other, and the hinges 3 will be reversed, or, in other words, the face of the hinge that is inward in Fig. 1 will be outward in Fig. 3. In the position shown in Fig. 3 when pressure is applied to the handles in order to cause the device to grasp a jar the tendency of the front or hinged ends of the sections will be to draw inwardly, and the more pressure is applied to the handles the more the hinged ends will tend to draw inwardly and thereby prevent any possibility of the hinged ends spreading.

The vertical bars 5, 7, 13, and 15 and the vertical braces 21 securely brace and prevent vertical displacement of the horizontal bars 6, 8, 12, and 14 relative to each other, and the device as an entirety forms a light, strong, and durable structure admirably adapted for the purpose intended.

From the foregoing description it will be seen that I have produced a can-holder which may be easily and quickly adjusted to adapt it to cans of different sizes, that it is positive in its operation in either of its positions to firmly grasp and hold the can, and that the cost of manufacturing such a device will be no more than would be the cost of manufacturing a device adapted to grasp and hold cans of one size only.

It will be understood that changes in the form, proportion, and minor details of construction may be resorted to without departing from the spirit or sacrificing any of the advantages of this invention.

Having thus described my invention, what I claim is—

1. A can-holder made in two sections hinged together at their front ends and provided with handle portions at their rear ends, each section consisting of an open framework of wire, and the connecting-hinges being reversible and the hinged ends of the sections adapted to overlap each other to contract the can-holder, substantially as described.

2. A can-holder made in two sections each consisting of a series of horizontal bars and a series of vertical bars and braces to tie the horizontal bars together, the space between the horizontal bars at their front ends being wider in one section than that between the similar bars of the other section, whereby said bars are adapted to overlap and cross each other, and hinges connecting the front ends of the sections, said hinges being reversed when the sections are caused to overlap at their hinged ends, substantially as described.

3. A can-holder made in two sections each consisting of a series of curved horizontal bars, and a series of vertical bars and braces to tie the horizontal bars together, the space between the horizontal bars at their front ends being wider in one section than that between similar bars of the other section, whereby said bars are adapted to overlap and cross each other, hinges connecting the front ends of the sections, said hinges being reversed when the sections are caused to overlap at their hinged ends, and horizontal tie-braces secured to the lower curved horizontal bars of each section, substantially as described and for the purpose specified.

In testimony that I claim the foregoing as my own I have hereto affixed my signature in the presence of two witnesses.

EMMA BROWN.

Witnesses:
C. E. HELD,
B. S. GRANSDEN.