PCT WORLD INTELLECTUAL PROPERTY ORGANIZATION
International Bureau

INTERNATIONAL APPLICATION PUBLISHED UNDER THE PATENT COOPERATION TREATY (PCT)

(51) International Patent Classification 6 :	A1	(11) International Publication Number:	WO 96/10871
H04B 7/12		(43) International Publication Date:	11 April 1996 (11.04.96)

(21) International Application Number: PCT/US95/12388

(22) International Filing Date: 27 September 1995 (27.09.95)

(30) Priority Data:
316,188 30 September 1994 (30.09.94) US

(71) Applicant: QUALCOMM INCORPORATED [US/US]; 6455 Lusk Boulevard, San Diego, CA 92121 (US).

(72) Inventors: KORNFELD, Richard, K.; 12384 Brickella Drive, San Diego, CA 92129 (US). WHEATLEY, Charles, E., III; 2208 Caminito Del Barco, Del Mar, CA 92014 (US).

(74) Agent: MILLER, Russell, B.; Qualcomm Incorporated, 6455 Lusk Boulevard, San Diego, CA 92121 (US).

(81) Designated States: AM, AT, AU, BB, BG, BR, BY, CA, CH, CN, CZ, DE, DK, EE, ES, FI, GB, GE, HU, IS, JP, KE, KG, KP, KR, KZ, LK, LR, LT, LU, LV, MD, MG, MK, MN, MW, MX, NO, NZ, PL, PT, RO, RU, SD, SE, SG, SI, SK, TJ, TM, TT, UA, UG, UZ, VN, European patent (AT, BE, CH, DE, DK, ES, FR, GB, GR, IE, IT, LU, MC, NL, PT, SE), OAPI patent (BF, BJ, CF, CG, CI, CM, GA, GN, ML, MR, NE, SN, TD, TG), ARIPO patent (KE, MW, SD, SZ, UG).

Published
With international search report.
Before the expiration of the time limit for amending the claims and to be republished in the event of the receipt of amendments.

(54) Title: MULTIPLE BAND RADIO

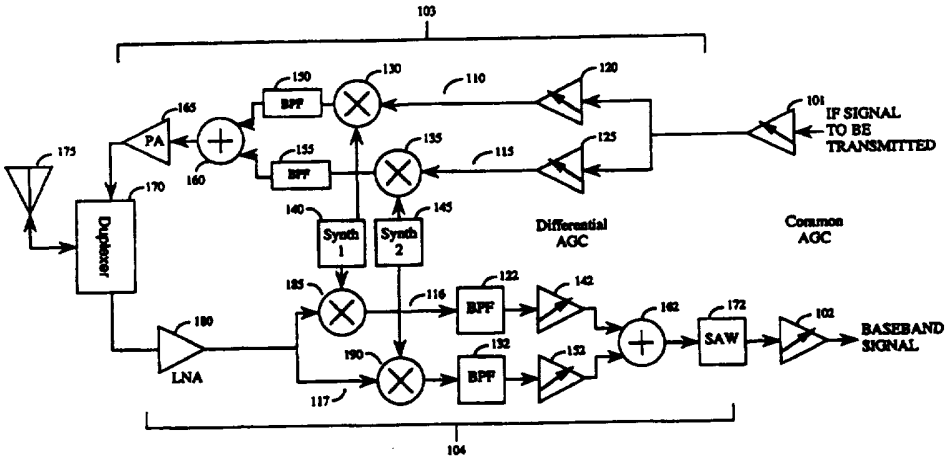

(57) Abstract

The dual band code division multiple access radio of the present invention operates on multiple frequencies simultaneously on either transmit or receive. The transmit path operates by splitting the transmit intermediate frequency (IF) path (103) and mixing the IF to two different transmit frequencies using two frequency synthesizers (140 and 145). The receive path (104) has two RF channels (116 and 117) that are mixed with the frequencies generated by the synthesizers (140 and 145) and summed into one IF strip. Thus the radio of the present invention can perform a soft hand-off between frequencies while communicating with both base stations simultaneously. Additional mixing paths and synthesizers can be added if it is desired to communicate with more than two base stations simultaneously.

FOR THE PURPOSES OF INFORMATION ONLY

Codes used to identify States party to the PCT on the front pages of pamphlets publishing international applications under the PCT.

AT	Austria	**GB**	United Kingdom	**MR**	Mauritania
AU	Australia	**GE**	Georgia	**MW**	Malawi
BB	Barbados	**GN**	Guinea	**NE**	Niger
BE	Belgium	**GR**	Greece	**NL**	Netherlands
BF	Burkina Faso	**HU**	Hungary	**NO**	Norway
BG	Bulgaria	**IE**	Ireland	**NZ**	New Zealand
BJ	Benin	**IT**	Italy	**PL**	Poland
BR	Brazil	**JP**	Japan	**PT**	Portugal
BY	Belarus	**KE**	Kenya	**RO**	Romania
CA	Canada	**KG**	Kyrgystan	**RU**	Russian Federation
CF	Central African Republic	**KP**	Democratic People's Republic of Korea	**SD**	Sudan
CG	Congo			**SE**	Sweden
CH	Switzerland	**KR**	Republic of Korea	**SI**	Slovenia
CI	Côte d'Ivoire	**KZ**	Kazakhstan	**SK**	Slovakia
CM	Cameroon	**LI**	Liechtenstein	**SN**	Senegal
CN	China	**LK**	Sri Lanka	**TD**	Chad
CS	Czechoslovakia	**LU**	Luxembourg	**TG**	Togo
CZ	Czech Republic	**LV**	Latvia	**TJ**	Tajikistan
DE	Germany	**MC**	Monaco	**TT**	Trinidad and Tobago
DK	Denmark	**MD**	Republic of Moldova	**UA**	Ukraine
ES	Spain	**MG**	Madagascar	**US**	United States of America
FI	Finland	**ML**	Mali	**UZ**	Uzbekistan
FR	France	**MN**	Mongolia	**VN**	Viet Nam
GA	Gabon				

MULTIPLE BAND RADIO

BACKGROUND OF THE INVENTION

I. FIELD OF THE INVENTION

The present invention relates to radio communications. More particularly, the present invention relates to radios having the capability of communicating over more than one frequency simultaneously.

II. DESCRIPTION OF THE RELATED ART

There are presently numerous different radiotelephone systems. The cellular analog advanced mobile phone system (AMPS), the two digital cellular systems: code division multiple access (CDMA) and time division multiple access (TDMA), or the new personal communication systems (PCS) that can use both TDMA and CDMA technologies. The CDMA cellular system is described in greater detail in Telecommunications Industry Association/Electronic Industries Association (TIA/EIA) Interim Standard IS-95.

The CDMA cellular system and the CDMA PCS share some common attributes. They are typically composed of numerous fixed base stations, each base station transmitting over a forward channel in a cellular area to one or more mobile radios.

The cell's base station is connected to the public switched telephone network (PSTN). This enables a mobile radio transmitting within the cell, over a reverse channel, to communicate with a land line telephone through the base station. Additionally, a mobile radio can communicate through the base stations and the PSTN to another mobile radio in the same cell or another cell.

In a CDMA cellular telephone system or a CDMA PCS, a common frequency band is used for communication with all base stations in a system. The common frequency band allows simultaneous communication between a mobile radio and more than one base station. The transmitters operate at a low power allowing the frequencies to be reused in nearby systems without substantial interference.

Signals occupying the common frequency band are discriminated at the receiving terminal (either within the mobile radio or base station) through the spread spectrum CDMA waveform properties based on the

use of high speed pseudo noise (PN) codes and orthogonal Walsh codes. The high speed PN codes and orthogonal Walsh codes are used to modulate signals transmitted from the base stations and the mobile radios. Transmitting terminals (either within a mobile radio or within a base station), using different PN codes or PN codes that are offset in time, produce signals that can be separately received at the receiving terminal.

In a typical CDMA system, each base station transmits a pilot signal having a common PN spreading code that is offset in code phase from the pilot signal of other base stations. During system operation, the mobile radio is provided with a list of code phase offsets corresponding to neighboring base stations surrounding the base station through which communication is established. The mobile radio is equipped with a searching element that allows the mobile radio to acquire and track the signal strength of the pilot signal from a group of base stations including the neighboring base stations.

CDMA technology provides for soft hand-off between cells across one frequency by the changing of code phase offsets. When there is a need to use more than one frequency so that a hand-off between two frequencies is required, a hard hand-off is performed. Hand-off between sectors of one cell across one frequency is referred to in the art as a softer hand-off.

A method and system for providing a communication with the mobile radio through more than one base station during the hand-off process are disclosed in U.S. Patent No. 5,267,261 issued November 30, 1993, titled *Mobile Assisted Soft Hand-Off In a CDMA Cellular Telephone System* and assigned to the assignee of the present invention. Using this system, communication between the mobile radio and the end user is uninterrupted by the eventual hand-off from an original base station to a subsequent base station. This type of hand-off may be considered as a "soft" hand-off in that communication with the subsequent base station is established before communication with the original base station is terminated. When the mobile radio is in communication with two base stations, a single signal for the end user is created from the signals from each base station by a cellular or personal communication system controller.

Mobile radio assisted soft hand-off operates based on the pilot signal strength of several sets of base stations as measured by the mobile radio. The Active Set is the set of base stations through which active communication is established. The Neighbor Set is a set of base stations surrounding an active base station comprising base stations that have a

high probability of having a pilot signal strength of sufficient level to establish communication. The Candidate Set is a set of base stations having a pilot signal strength of sufficient level to establish communication.

When communications are initially established, a mobile radio communicates through a first base station and the Active Set contains only the first base station. The mobile radio monitors the pilot signal strength of the base stations of the Active Set, the Candidate Set, and the Neighbor Set. When a pilot signal of a base station in the Neighbor Set exceeds a predetermined threshold level, the base station is added to the Candidate Set and removed from the Neighbor Set at the mobile radio.

The mobile radio communicates a message to the first base station identifying the new base station. A cellular or PCS controller decides whether to establish communication between the new base station and the mobile radio. Should the cellular or PCS controller decide to do so, the controller sends a message to the new base station with identifying information about the mobile radio and a command to establish communications with the mobile radio.

A message is also transmitted to the mobile radio through the first base station. The message identifies a new Active Set that includes the first and the new base stations. The mobile radio searches for the new base station's transmitted information signal and communication is established with the new base station without termination of communication through the first base station. This process can continue with additional base stations.

When the mobile radio is communicating through multiple base stations, it continues to monitor the signal strength of the base stations of the Active Set, the Candidate Set, and the Neighbor Set. Should the signal strength corresponding to a base station of the Active Set drop below a predetermined threshold for a predetermined period of time, the mobile radio generates and transmits a message to report the event. The cellular or PCS controller receives this message through at least one of the base stations with which the mobile radio is communicating. The controller may decide to terminate communications through the base station having a weak pilot signal strength.

The controller, upon deciding to terminate communications through a base station, generates a message identifying a new Active Set of base stations. The new Active Set does not contain the base station through which communication is to be terminated. The base stations

through which communication is established send a message to the mobile radio. The controller also communicates information to the base station to terminate communications with the mobile radio. The mobile radio communications are thus routed only through base stations identified in the new Active Set.

Because the mobile radio is communicating with the end user through at least one base station at all times throughout the soft hand-off process, no interruption in communications occurs between the mobile radio and the end user. A soft hand-off provides significant benefits in its inherent "make before break" communication over conventional hard hand-off or "break before make" techniques employed in other cellular communication systems.

When a mobile radio moves from one cell to another, the radio may need to change frequencies, i.e., execute a hard hand-off. This frequency change in PCS may be due to the use of Operational Fixed Services (OFS) that share the PCS spectrum. Near these OFS's, the PCS mobile cannot use the OFS frequency in order to avoid interference. The PCS mobile, therefore, has to change frequencies in these areas.

In handing-off from one frequency to another, the mobile radio searches the Neighbor Set for another pilot channel, synchronizing channel, paging channel, and traffic channel. If only the pilot and/or synchronizing channels are present, the mobile radio moves on to the next frequency.

The problem with a soft hand-off from one frequency to another is that as the mobile radio searches the Neighbor Set for other pilot channels, the synthesizer must change frequencies rapidly while allowing a settling time of 2 milliseconds on the frequency to enable the frequency to stabilize. This is difficult to accomplish and requires a more complex design to do so. Additionally, the mobile must leave the frequency being used, causing an interruption in communications. There is a resulting need for an economical radio that can rapidly communicate over multiple frequencies, thus allowing the mobile radio to efficiently perform a soft hand-off between frequencies.

SUMMARY OF THE INVENTION

The present invention encompasses a multiple band radio that can transmit and receive multiple frequency signals simultaneously. The radio has a transmit path and a receive path. The transmit path is

comprised of a plurality of mixing paths. Each mixing path has an amplifier whose input is coupled to the signal to be transmitted. The output of each amplifier is coupled to an input of a mixer. Another input of the mixers is coupled to an output of a frequency synthesizer. The resulting signals from the mixers are summed by a summer. The sum signal is input to a power amplifier which inputs the signal to an antenna to be radiated.

The receive path is comprised of an amplifier coupled to the antenna for amplifying received signals. The output of the amplifier is input to a plurality of down converting paths. Each down converting path has a mixer coupled to the amplified signal. Another input of each mixer is coupled to the frequency synthesizers. The resulting down converted signals are input to filters. The output of each filters is input to a variable gain amplifier. The amplified signals from the down converting paths are input to a summer. The sum signal is then input to a common filter that generates a signal for use by the rest of the radio.

The multiple frequency synthesizers in combination with the multiple transmit and receive paths enables the apparatus of the present invention to transmit and receive on multiple frequencies simultaneously, communicate on one frequency while searching others, and to perform a soft hand-off between frequencies. This alleviates the problem of the prior art of settling time of a frequency synthesizer since the frequency synthesizers do not have to change frequencies as rapidly and as frequently as previously required. It also avoids an interruption in communications, as normally results from monitoring one frequency at a time.

BRIEF DESCRIPTION OF THE DRAWINGS

FIG. 1 shows a block diagram of the multiple band radio of the present invention.

FIG. 2 shows an alternate embodiment of the multiple band radio of the present invention.

FIG. 3 shows another alternate embodiment of the multiple band radio of the present invention.

DETAILED DESCRIPTION OF THE PREFERRED EMBODIMENT

The apparatus and method of the present invention enables a mobile radio to operate on multiple frequencies. By increasing the number of intermediate frequency paths in the radio and separately mixing each signal to be transmitted to different frequencies, the number of frequencies that the radio can communicate over is increased. The use of CDMA technology then allows these signals to be separated later.

The apparatus of the present invention is illustrated in FIG. 1. The apparatus is comprised of a transmit path (103) and a receive path (104). Both the transmit (103) and receive paths (104) have a common automatic gain control (AGC) amplifier (101 and 102) for amplifying a signal at the intermediate frequency. In the preferred embodiment, the receive intermediate frequency is 85 MHz and transmit intermediate frequency is 130 MHz. Alternate embodiments use other intermediate frequencies.

The common AGC amplifiers (101 and 102) are used for both open loop power control and closed loop power control of the radio. Open loop power control is explained in greater detail in U.S. Patent No. 5,056,109 to Gilhousen et al. and assigned to Qualcomm, Incorporated. Open loop power control is accomplished by the radio estimating the path loss of the forward link based on the total power received by the radio. The total power is the sum of the power from all base stations operating on the same frequency assignment as perceived by the radio. From the estimate of the average forward channel loss, the radio sets the transmit level of the reverse channel signal to compensate for the channel loss. Closed loop power control is accomplished through commands from the base station.

The apparatus of the present invention performs this power control using the common AGC amplifiers (101 and 102). When a signal is received by the radio, the gain of the receive common AGC amplifier (102) is adjusted so that the gain of the receiver is substantially equal to the gain of the transmitter minus 73 dB. The difference is the estimated path loss.

The transmit path (103) of the apparatus of the present invention is further comprised of multiple mixing paths (110 and 115). In the preferred embodiment, there are two mixing paths (110 and 115) enabling the radio to communicate on two different frequencies simultaneously. Alternate embodiments could use more than two mixing paths to enable the radio to communicate with a larger number of base stations.

Each mixing path (110 and 115) contains a differential AGC amplifier (120 and 125) each feeding the input of a mixer (130 and 135).

These amplifiers (120 and 125) have a variable gain that is adjustable over a 20 dB range, in the preferred embodiment. Alternate embodiments have different ranges for the amplifier gain.

The inputs to the differential AGC amplifiers (120 and 125) are coupled to the output of the transmit common AGC amplifier (101). The differential AGC amplifiers (120 and 125) amplify the signal to be transmitted. During normal operation of the radio, the gain of one of the amplifiers is set to zero. When the radio is handing-off or searching another frequency, the gains are approximately equal. If it is desired to change the hand-off region of the system, one gain can be increased over the other. This increases the transmit power of one signal over the other and therefore the distance the radio can operate from the base station using the frequency of the higher power signal.

Frequency synthesizers (140 and 145) are coupled to the other inputs of the mixers (130 and 135). These synthesizers (140 and 145), in the preferred embodiment, are variable frequency synthesizers that cover the frequency spectrum set aside for either the cellular radiotelephone systems or the personal communication systems. The frequency output by the synthesizers (140 and 145) is controlled by the radio's microcontroller. The radio receives instructions from the base stations on what frequency to operate and the microcontroller varies the frequency of the synthesizers (140 and 145) so that the radio transmits and receives at these frequencies.

Each mixer (130 and 135) in the mixing paths (110 and 115) multiplies the signal from its respective differential AGC amplifier (120 or 125) with the signal from the respective frequency synthesizer (140 or 145). The outputs of both mixers (130 and 135) are combined by a summer (160). The sum signal is amplified by a power amplifier (165). In the preferred embodiment, the amplifier (165) is set at a gain of approximately 30 dB. Alternate embodiments use other gains depending on the noise levels of the components.

The amplified signal is input to a duplexer (170) that is connected to an antenna (175). The duplexer (170) enables the antenna (175) to be connected to both the transmit (103) and receive paths (104) by separating the transmitted signals from the received signals.

The receive path (104) is comprised of a low noise amplifier (180) feeding multiple down converting paths (116 and 117), each path down converting a received signal to the same IF frequency. The low noise amplifier amplifies the received signal by a gain of 20 dB in the preferred embodiment.

In the preferred embodiment, the amplified signal is input to the two down converting paths (116 and 117). Alternate embodiments use more down converting paths if it is desired to communicate with more than two base stations simultaneously.

Each down converting path (116 and 117) is comprised of a mixer (185 and 190) that combines the frequency from one of the frequency synthesizers (140 or 145) with the received, amplified signal. Therefore, if a mixing path (110 or 115) operates at a frequency of 850 MHz, there is a corresponding down converting path (116 or 117) that also operates at that frequency offset by the duplexor offset. Band pass filters (122 and 132) are used to filter the signals from the mixers (185 and 190).

The outputs of the bandpass filters (122 and 132) are each amplified by a differential amplifier (142 and 152). The amplifiers (142 and 152) operate in a similar fashion to the differential amplifiers (120 and 125) in the transmit path. The receive differential amplifiers (142 and 152) normally have a gain that is approximately equal. The gain of one can be offset from the other, however, to emphasize one signal frequency over the other. This enables the mobile to monitor either frequency channel or both at once.

The outputs of the receive differential amplifiers (142 and 152) are input to a summer (162) that adds them together. The sum signal from the summer (162) is input to a bandpass filter (172) for filtering. In the preferred embodiment, this bandpass filter (172) is a surface acoustic wave (SAW) filter. The filtered signal is input to the common AGC amplifier (102) that was explained in greater detail above. The amplified signal from this amplifier (102) is then input to the radio's circuitry for further processing as is already known in the art. TIA/EIA IS-95 describes this processing in greater detail.

If the differential AGC amplifiers (120, 125, 142, and 152) are always set equal, in other words the hand-off region is always at the equal power point, the amplifiers (120, 125, 142, and 152) can be replaced by switches (220, 225, 242, and 252). Such an embodiment is illustrated in FIG. 2. The switches can take the form of diodes, transistors, relays, or other switch devices to allow the circuit to be simplified.

This alternate embodiment operates in a similar fashion to the preferred embodiment, the difference being the switches. The switch position is controlled by the radio's microcontroller, depending on the number of frequencies required by the radio. If the radio is not operating near the hand-off region of the cellular system, only one frequency is

required and, therefore, only one switch in each path is closed. As the radio approaches the hand-off region, the second switch in each path is closed to enable the radio to communicate over multiple frequencies.

Yet another alternate embodiment is illustrated in FIG. 3. The structure and operation of the receive path of this embodiment is the same as the preferred embodiment. The transmit path (301) of this embodiment, however, is comprised of the common AGC amplifier (302), performing the same closed loop power control function as in the preferred embodiment, a mixer (310), a bandpass filter (330), and a power amplifier (315).

Two frequency synthesizers (320 and 325) each generate a signal having a different frequency. A switch or multiplexer (330) connects both of the frequency synthesizers to the mixer (310). The switch is controlled by the radio's microcontroller as are the frequency synthesizers (320 and 325). The radio can now rapidly switch between the first frequency synthesizer (320) and the second frequency synthesizer (325) as required by the frequency of each base station with which the radio is communicating. These frequencies are determined by the received signals since this alternate embodiment can still receive on multiple frequencies.

The output of the amplifier (302) is input to the mixer (310). The other input of the mixer (310) is connected to the switch (330). When synthesizer 1 (320) is needed, the switch connects it to the mixer (310). When synthesizer 2 (325) is needed, the switch (330) disconnects synthesizer 1 (320) and connects synthesizer 2 (325) to the mixer (310). If in other alternate embodiments additional synthesizers are used, the operation of the switch would be the same.

The bandpass filter (330) filters the output of the mixer (310). As in the preferred embodiment, the pass band of the filter (330) is adjusted depending on the signal desired from the mixer (310).

The output of the bandpass filter (330) is input to a power amplifier (315). As in the preferred embodiment, this amplifier is adjusted to the desired transmit power required for the cellular radio system in which the apparatus of the present invention operates.

The alternate embodiment of FIG. 3 cannot transmit on multiple frequencies simultaneously. However, it can receive and down convert multiple frequencies simultaneously. This embodiment requires fewer components and therefore is less expensive and needs less real estate on a printed circuit board than the preferred embodiment since it does not require additional amplifiers, mixers, and bandpass filters. Yet another

advantage is that the power amplifier only has to transmit one frequency at a time. This is critical to maintain linearity and efficiency of the power amplifier.

WE CLAIM:

CLAIMS

1. A multiple frequency diversity apparatus that transmits and receives multiple frequency signals simultaneously, the apparatus having a transmit path and a receive path, the apparatus comprising:

a plurality of mixing paths in the transmit path, each mixing path having an amplifier of a first group of amplifiers and a mixer coupled to each amplifier of the first group of amplifiers, the plurality of mixing paths coupled to a signal to be transmitted, each mixing path having an output;

a plurality of down converting paths in the receive path, each down converting path having a mixer that is coupled to a filter that is coupled to an amplifier of a second group of amplifiers, each down converting path having an output;

a plurality of frequency synthesizers, a first frequency synthesizer of the plurality of frequency synthesizers coupled to a first mixing path of the plurality of mixing paths and a first down converting path of the plurality of down converting paths;

a first summer coupled to the outputs of the plurality of mixing paths;

a second summer coupled to the outputs of the plurality of down converting paths; and

a filter coupled to the second summer, the filter outputting a down converted signal.

2. A multiple frequency radio that transmits and receives multiple frequency signals simultaneously, the radio operating in a cellular radio environment comprising a plurality of base stations, each base station being located in a cell comprising at least one sector, the radio having a transmit path and a receive path, the radio comprising:

a first amplifier, in the transmit path, for amplifying a signal to be transmitted;

a plurality of mixing paths in the transmit path, each mixing path having a variable gain amplifier of a first group of variable gain amplifiers and a mixer coupled to each amplifier, each mixing path having an input and an output, the plurality of mixing path's inputs coupled to the first variable gain amplifier;

a plurality of down converting paths in the receive path, each down converting path having a mixer coupled to a filter coupled to a variable

amplifier of a second group of variable gain amplifiers, each down converting path having an output and an input;

a plurality of frequency synthesizers, a first frequency synthesizer coupled to both a first mixer in the mixing paths and to a first mixer in the down converting paths;

a first summer coupled to the outputs of the plurality of mixing paths;

a second summer coupled to the outputs of the plurality of down converting paths;

a power amplifier, having an output and an input, the power amplifier input coupled to the first summer;

a low noise amplifier, having an input and an output, the low noise amplifier's output coupled to the inputs of the plurality of down converting paths;

a duplexer coupled to the low noise amplifier input and the power amplifier output;

an antenna, coupled to the duplexer, for radiating and receiving radio signals;

a filter coupled to the second summer; and

a second amplifier coupled to the filter.

3. The radio of claim 2 wherein the gains of the first and second groups of variable gain amplifiers are adjusted in response to a power of a received radio signal.

4. A method for transmitting multiple signals, each signal having a different frequency, with a dual mode radio communication device, a first mode being single frequency operation and a second mode being dual frequency operation, the radio communication device operating in a cellular radio environment having a plurality of base stations, each base station communicating within a cell, the method comprising the steps of:

generating a signal to be transmitted;

altering the signal by a first gain to produce a first gain adjusted signal;

altering the signal by a second gain to produce a second gain adjusted signal;

multiplying the first gain adjusted signal by a first oscillator signal having a first frequency to produce a first transmit frequency signal;

multiplying the second gain adjusted signal by a second oscillator signal having a second frequency to produce a second transmit frequency signal;

summing the first and second transmit frequency signals to produce a summed signal;

power amplifying the summed signal to produce a power amplified signal; and

radiating the power amplified signal from an antenna.

5. The method of claim 4 wherein the second gain is substantially zero in the first mode and non-zero in the second mode.

6. The method of claim 4 and further including the step of increasing the second gain until it is substantially equal to the second gain when the radio communication device is in a hand-off region between the first base station and the second base station.

7. A method for receiving multiple signals, each signal having a different frequency, with a dual mode radio, a first mode being single frequency operation and a second mode being dual frequency operation, the radio operating in a cellular radio environment having a plurality of base stations, each base station communicating within a cell, the method comprising the steps of:

receiving a first signal from a first base station and a second signal from a second base station, the first and second base stations being of the plurality of base stations;

amplifying the first and second signals to produce an amplified received signal;

multiplying the amplified received signal by a first signal having a first frequency to produce a first down converted signal;

multiplying the amplified received signal by a second signal having a second frequency to produce a second down converted signal;

filtering the first and second down converted signals to produce first and second filtered signals;

altering the first filtered signal by a first gain to produce a first amplified, filtered signal;

altering the second filtered signal by a second gain to produce a second amplified, filtered signal;

summing the first and second amplified, filtered signals to produce a summed signal; and

filtering the summed signal.

8. The method of claim 7 wherein the first and second gains are determined in response to receive power levels of the first and second signals.

9. The method of claim 7 wherein the first gain is increased as the distance between the first base station and the radio communication device increases.

10. The method of claim 7 and further including the step of increasing the first gain until it is substantially equal to the second gain when the radio communication device is in a hand-off region between the first base station and the second base station.

11. A method for transmitting multiple signals, each signal having a different frequency, with a dual mode radio, a first mode being single frequency operation and a second mode being dual frequency operation, the radio having a transmit path comprising a plurality of mixing paths, the radio operating in a cellular radio environment having a plurality of base stations, each base station communicating within a cell, the method comprising the steps of:

generating a signal to be transmitted;

altering the signal by a gain to produce a gain adjusted signal;

if the radio communication device is in the first mode, preventing the gain adjusted signal from being conducted through more than one mixing path;

if the radio communication device is in the second mode, conducting the gain adjusted signal through at least two of the plurality of mixing paths;

multiplying each gain adjusted signal that is conducted through a mixing path of the plurality of mixing paths by a different oscillator signal, each oscillator signal having a different frequency to produce at least one transmit frequency signal;

if the radio is in the second mode, summing the at least one transmit frequency signal to produce a summed signal;

power amplifying the summed signal to produce a power amplified signal; and

radiating the power amplified signal from an antenna.

12. A method for receiving multiple signals, each signal having a different frequency, with a dual mode radio, a first mode being single frequency operation and a second mode being dual frequency operation, the radio having a receive path comprising a plurality of down converting paths, the radio operating in a cellular radio environment having a plurality of base stations, each base station communicating within a cell, the method comprising the steps of:

in the first mode, receiving a first signal from a first base station of the plurality of base stations;

in the second mode, receiving a plurality of signals from the plurality of base stations, the plurality of received signals each having a power level;

in response to the mode, amplifying the first signal or the plurality of signals to produce a first amplified signal or a plurality of amplified signals;

in response to the mode, multiplying the first amplified signal or each of the plurality of amplified signals by a synthesizer signal, each synthesizer signal having a different frequency, thus producing a first down converted signal or a plurality of down converted signals;

in response to the mode, filtering the first down converted signal or the plurality of down converted signals, to produce a first filtered signal or a plurality of filtered signals;

in the first mode, altering the first filtered signal by a first gain to produce a first amplified signal;

in the second mode, altering each of the plurality of filtered signals by a gain determined in response to the plurality of received signals power levels, thus producing a plurality of amplified signals;

in the second mode, summing the plurality of amplified signals to produce a summed signal; and

filtering the summed signal.

13. A multiple band diversity apparatus that transmits, in a first mode, multiple frequency signals simultaneously through a transmit path and receives, in the first mode, multiple frequency signals simultaneously through a receive path, the apparatus having a second

mode for transmitting and receiving a single frequency, the apparatus comprising:

a plurality of mixing paths in the transmit path, each mixing path having a switch of a first plurality of switches and a mixer coupled to each switch, the plurality of mixing paths coupled to a signal to be transmitted, each mixing path having an output;

a plurality of down converting paths in the receive path, each down converting path having a mixer that is coupled to a filter that is coupled to a switch of a second plurality of switches, each down converting path having an output;

a plurality of frequency synthesizers, a first frequency synthesizer of the plurality of frequency synthesizers coupled to a first mixing path of the plurality of mixing paths and a first down converting path of the plurality of down converting paths;

a first summer coupled to the outputs of the plurality of mixing paths;

a second summer coupled to the outputs of the plurality of down converting paths; and

a filter coupled to the second summer, the filter outputting a down converted signal.

14. The apparatus of claim 13 wherein in the second mode only one switch of the first plurality of switches and one switch of the second plurality of switches is closed and in the first mode all switches of both the first and second plurality of switches are closed.

15. A multiple frequency radio that receives multiple frequency signals simultaneously, the radio operating in a cellular radio environment comprising a plurality of base stations, each base station being located in a cell comprising at least one sector, the radio having a transmit path and a receive path, the radio comprising:

a multiplier, in the transmit path, having a plurality of inputs and an output, a first input coupled to a signal to be transmitted;

a plurality of signal synthesizers, each generating a signal having a different frequency;

a multiplexing switch having a plurality of inputs and an output, each input coupled to a first signal synthesizer of the plurality of signal synthesizers, the output coupled to the multiplier;

a transmit amplifier in the transmit path having an input coupled to the multiplier output;

a receive amplifier, in the receive path, having an input coupled to a received signal;

a plurality of down converting paths in the receive path, each down converting path comprising a mixer having an input coupled to an output of the receive amplifier and an input coupled to a first signal synthesizer of the plurality of synthesizers, a filter coupled to an output of the mixer, and a differential amplifier having a variable gain, an output, and an input coupled to an output of the filter; and

a summer in the receive path having an input coupled to the outputs of the plurality of differential amplifiers.

16. The radio of claim 15 wherein the variable gain of each differential amplifier is determined by a distance between the radio and the plurality of base stations such that signals output from the plurality of differential amplifiers are substantially equal in amplitude to each other.

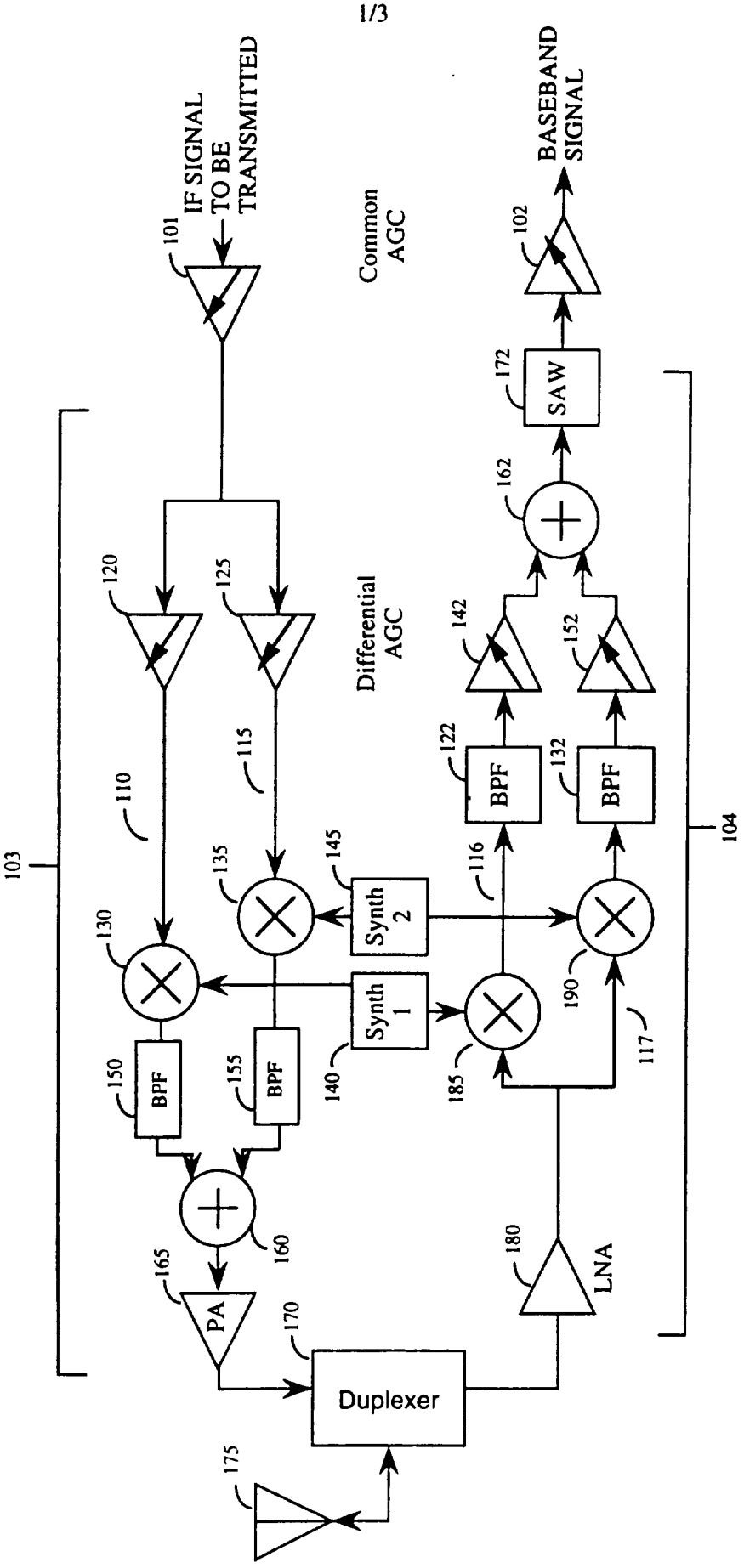
IF SIGNAL TO BE TRANSMITTED
101
Common AGC
BASEBAND SIGNAL
102
172
SAW
162
120
125
Differential AGC
142
152
122
BPF
132
BPF
110
115
103
135
145
116
104
Synth 2
130
Synth 1
190
150
BPF
155
BPF
140
185
117
160
165
PA
180
LNA
170
Duplexer
175

FIG. 1

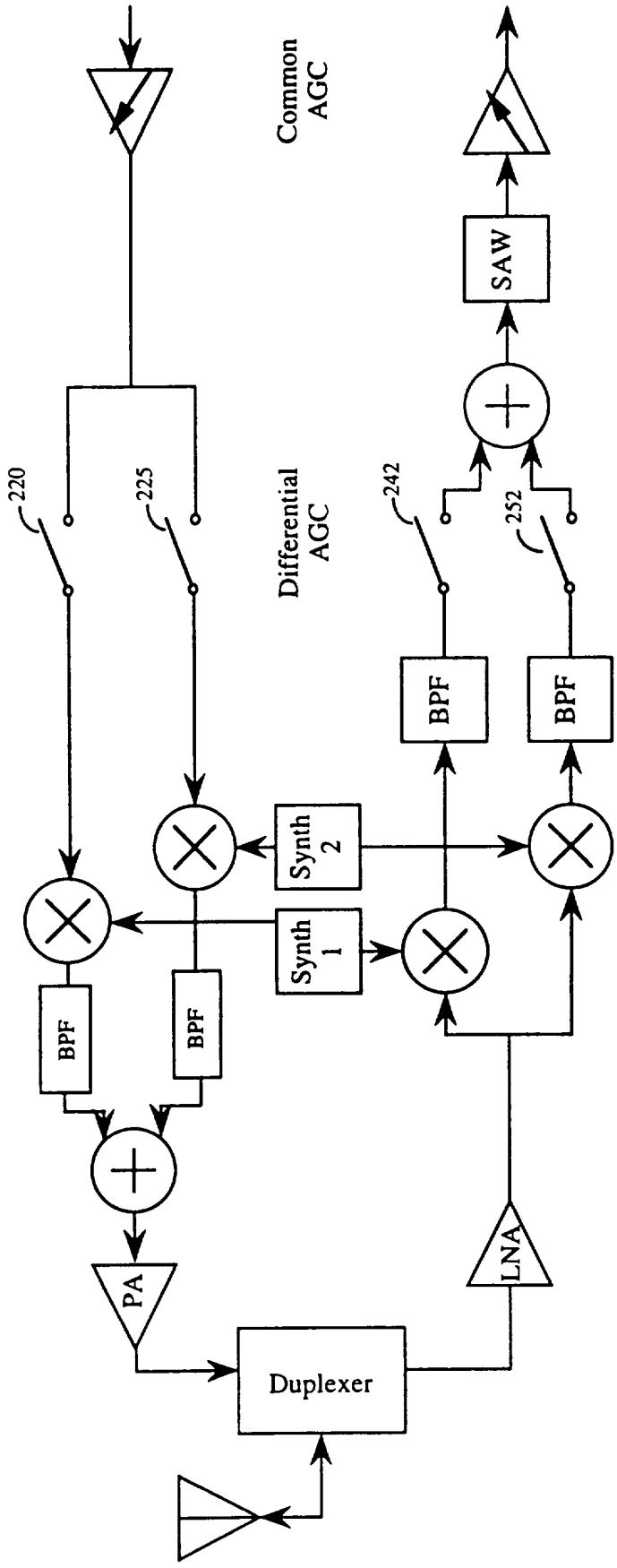
Common AGC
Differential AGC
220
225
242
252
SAW
BPF
BPF
BPF
BPF
Synth 2
Synth 1
PA
LNA
Duplexer

FIG. 2

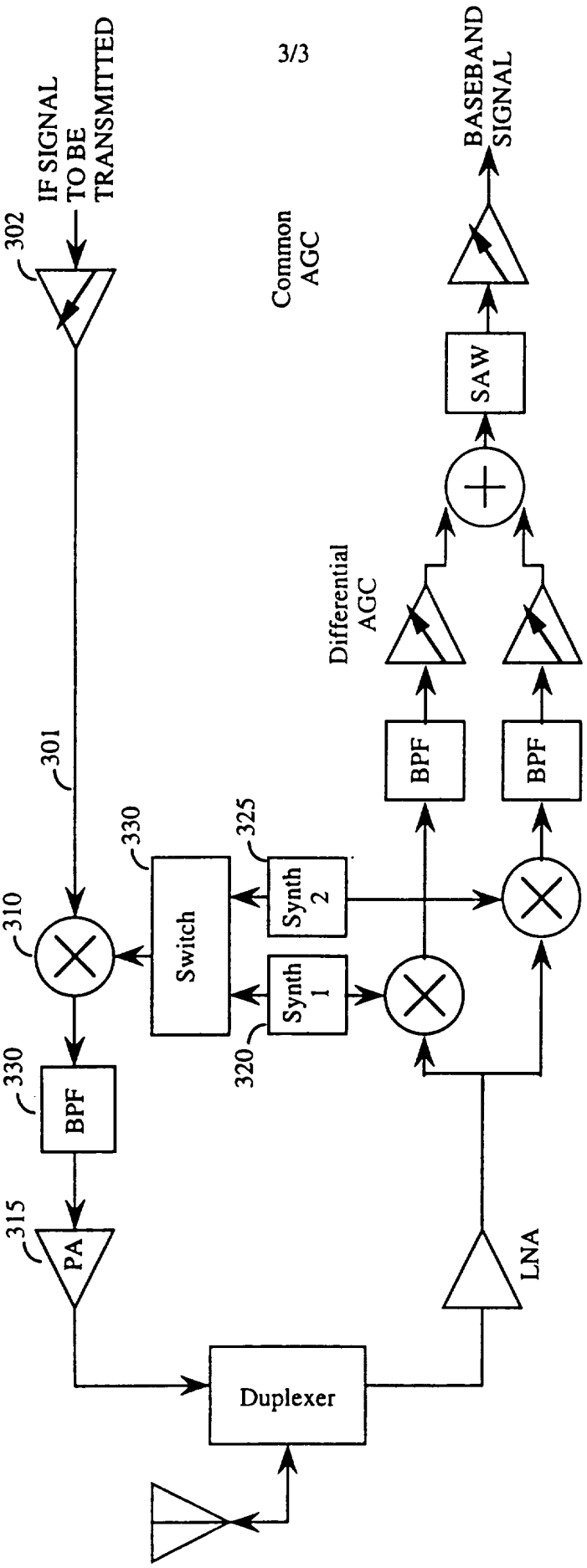
IF SIGNAL TO BE TRANSMITTED
302
Common AGC
BASEBAND SIGNAL
SAW
Differential AGC
301
330
325
310
Switch
Synth 2
Synth 1
320
BPF
BPF
330
BPF
315
PA
LNA
Duplexer

FIG. 3

INTERNATIONAL SEARCH REPORT

Inter nal Application No
PCT/US 95/12388

A. CLASSIFICATION OF SUBJECT MATTER
IPC 6 H04B7/12

According to International Patent Classification (IPC) or to both national classification and IPC

B. FIELDS SEARCHED

Minimum documentation searched (classification system followed by classification symbols)
IPC 6 H04B H04L H04Q

Documentation searched other than minimum documentation to the extent that such documents are included in the fields searched

Electronic data base consulted during the international search (name of data base and, where practical, search terms used)

C. DOCUMENTS CONSIDERED TO BE RELEVANT

Category *	Citation of document, with indication, where appropriate, of the relevant passages	Relevant to claim No.
Y	EP,A,0 270 112 (FUJITSU LIMITED) 8 June 1988 see column 2, line 44 - column 3, line 21 see column 4, line 14 - column 9, line 9 see column 6, line 17 - line 41 see claim 1 ---	1-16
Y	US,A,5 267 261 (BLAKENEY ET AL.) 30 November 1993 see column 3, line 26 - column 4, line 43 see column 8, line 59 - column 10, line 37 see column 15, line 15 - line 31 see column 29, line 17 - line 64 --- -/--	1-16

[X] Further documents are listed in the continuation of box C.

[X] Patent family members are listed in annex.

* Special categories of cited documents :

"A" document defining the general state of the art which is not considered to be of particular relevance

"E" earlier document but published on or after the international filing date

"L" document which may throw doubts on priority claim(s) or which is cited to establish the publication date of another citation or other special reason (as specified)

"O" document referring to an oral disclosure, use, exhibition or other means

"P" document published prior to the international filing date but later than the priority date claimed

"T" later document published after the international filing date or priority date and not in conflict with the application but cited to understand the principle or theory underlying the invention

"X" document of particular relevance; the claimed invention cannot be considered novel or cannot be considered to involve an inventive step when the document is taken alone

"Y" document of particular relevance; the claimed invention cannot be considered to involve an inventive step when the document is combined with one or more other such documents, such combination being obvious to a person skilled in the art.

"&" document member of the same patent family

Date of the actual completion of the international search	Date of mailing of the international search report
6 February 1996	20.02.96

Name and mailing address of the ISA	Authorized officer
European Patent Office, P.B. 5818 Patentlaan 2 NL - 2280 HV Rijswijk Tel. (+ 31-70) 340-2040, Tx. 31 651 epo nl, Fax (+ 31-70) 340-3016	Canali, F

Form PCT/ISA/210 (second sheet) (July 1992)

INTERNATIONAL SEARCH REPORT

Inter nal Application No
PCT/US 95/12388

C.(Continuation) DOCUMENTS CONSIDERED TO BE RELEVANT

Category *	Citation of document, with indication, where appropriate, of the relevant passages	Relevant to claim No.
A	EP,A,0 430 106 (NIPPON TELEGRAPH AND TELEPHONE CORPORATION) 5 June 1991 see column 1, line 10 - line 15 see column 3, line 20 - column 4, line 7 see column 4, line 19 - column 5, line 5 see column 8, line 2 - line 20 ---	1-3, 7-10,12, 15,16
A	US,A,4 584 716 (DRENTEA) 22 April 1986 see column 2, line 14 - line 46 see column 3, line 9 - column 4, line 45 -----	1,2,7, 12,15

2

INTERNATIONAL SEARCH REPORT

.nformation on patent family members

Inter nal Application No
PCT/US 95/12388

Patent document cited in search report	Publication date	Patent family member(s)		Publication date
EP-A-270112	08-06-88	JP-C-	1755350	23-04-93
		JP-B-	4042855	14-07-92
		JP-A-	63141417	13-06-88
		CA-A-	1263148	21-11-89
		DE-A-	3784643	15-04-93
		US-A-	4965852	23-10-90
US-A-5267261	30-11-93	NONE		
EP-A-430106	05-06-91	CA-A,C	2030641	25-05-91
		DE-D-	69022000	05-10-95
		JP-A-	3214890	20-09-91
		US-A-	5231632	27-07-93
US-A-4584716	22-04-86	NONE		