Jan. 28, 1930. E. E. DAVIS ET AL 1,745,207

CYLINDER REBORING MACHINE

Filed July 5, 1924 3 Sheets-Sheet 1

Fig. 1.

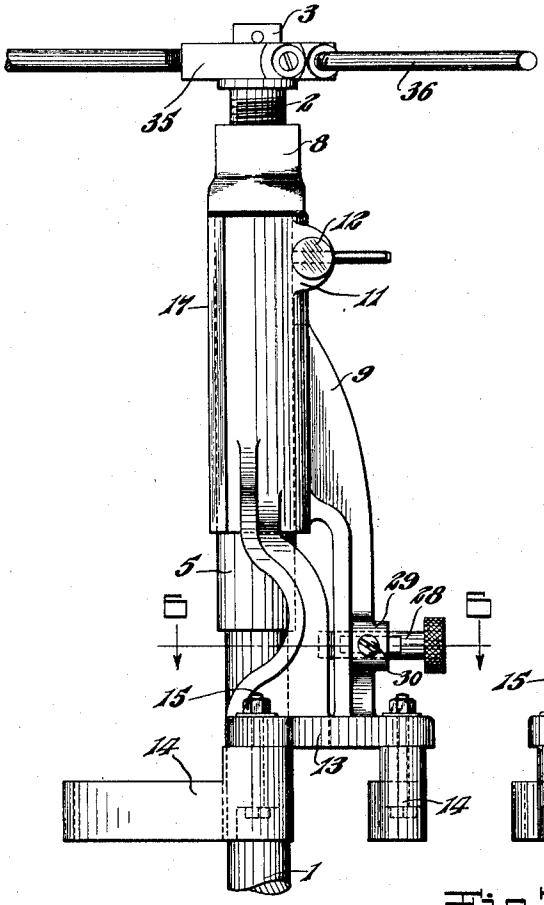

Fig. 2.

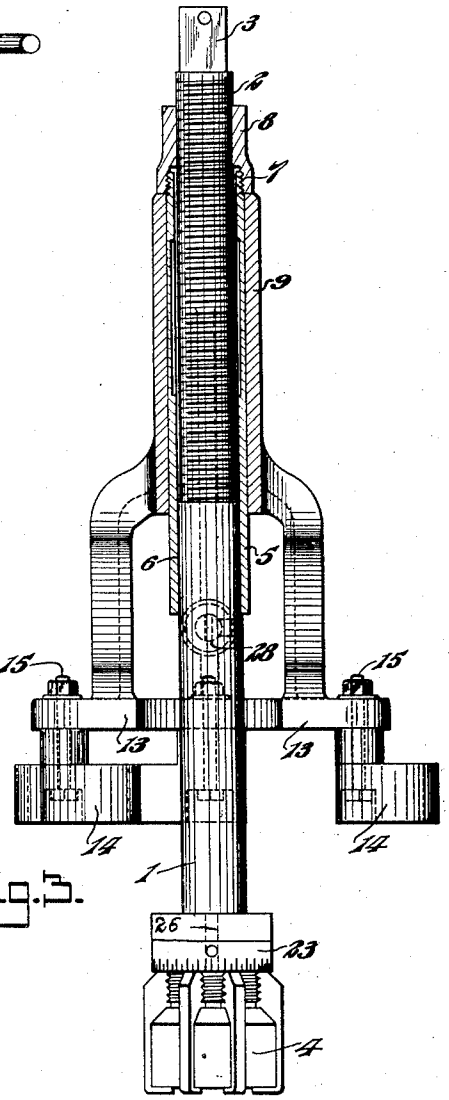

Fig. 3.

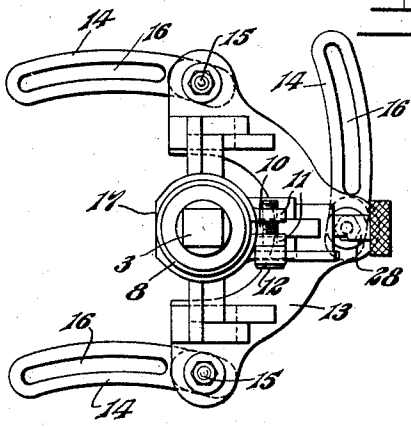

Inventors.
EMERY E. DAVIS.
AND CHRISTIAN C. KOELN.
By John W. Brennan
Attorney.

Jan. 28, 1930. E. E. DAVIS ET AL 1,745,207

CYLINDER REBORING MACHINE

Filed July 5, 1924 3 Sheets-Sheet 2

Fig. 4.

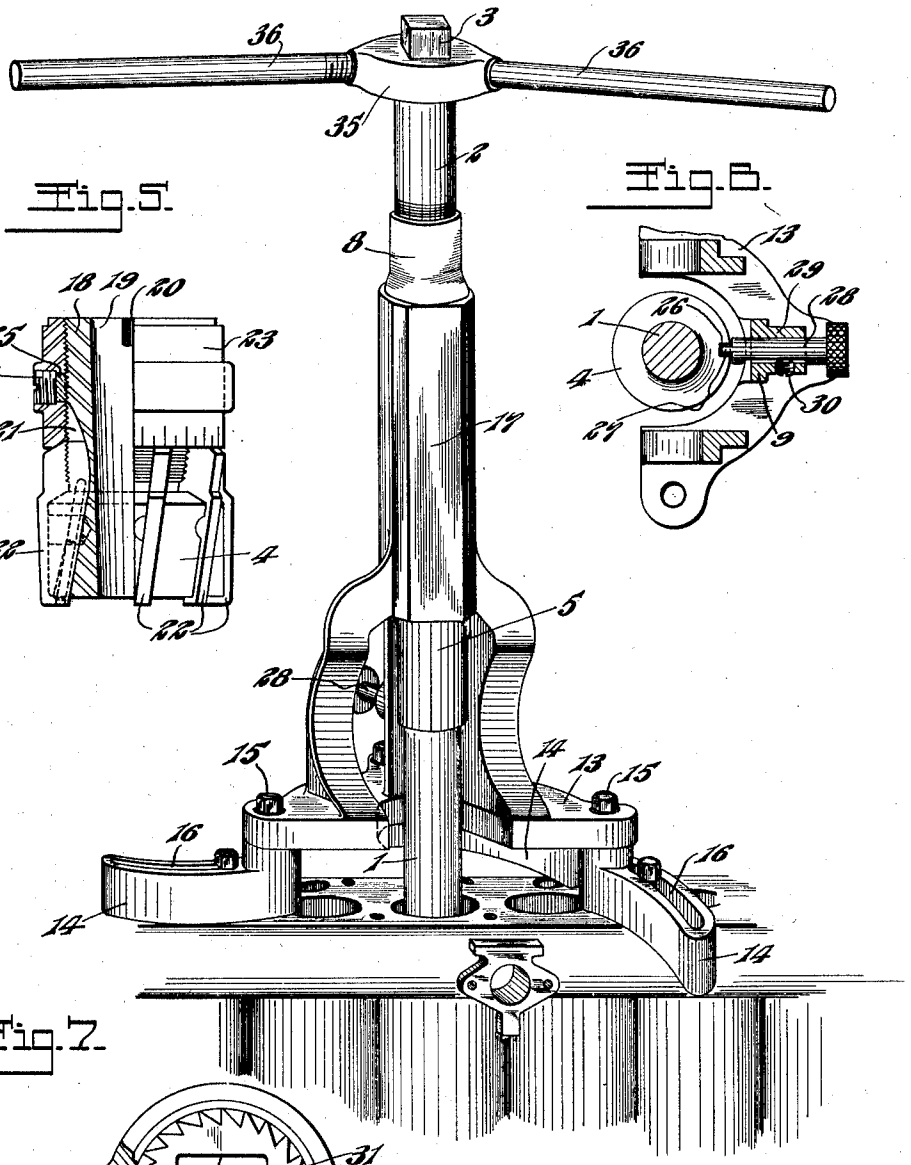

Fig. 5.

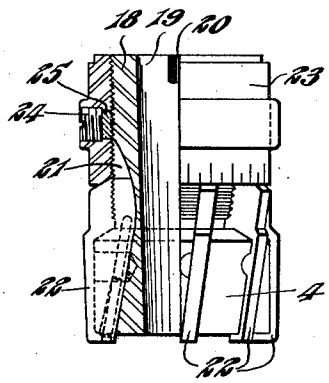

Fig. 6.

Fig. 7.

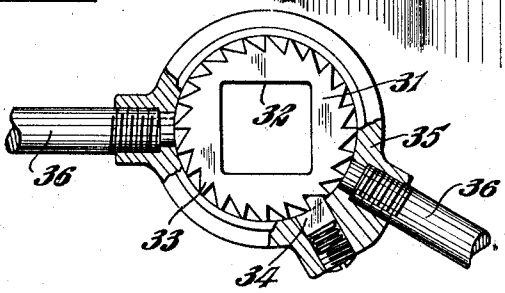

Inventors.
EMERY E. DAVIS.
AND CHRISTIAN C. KOELN.
By John N. Brunner
Attorney.

Jan. 28, 1930. E. E. DAVIS ET AL 1,745,207

CYLINDER REBORING MACHINE

Filed July 5, 1924 3 Sheets-Sheet 3

Fig. 8.

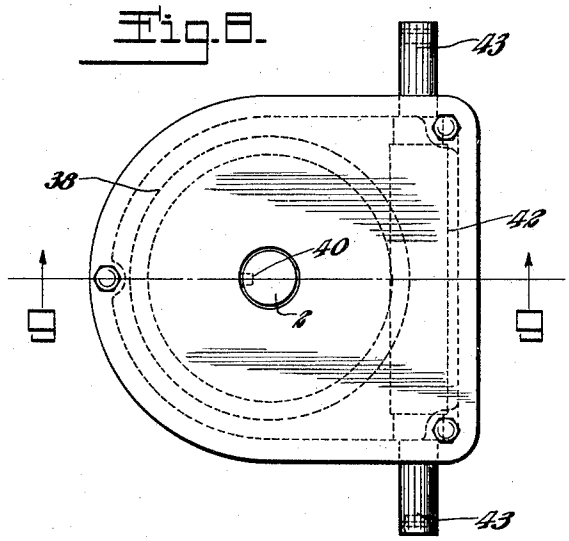

Fig. 9.

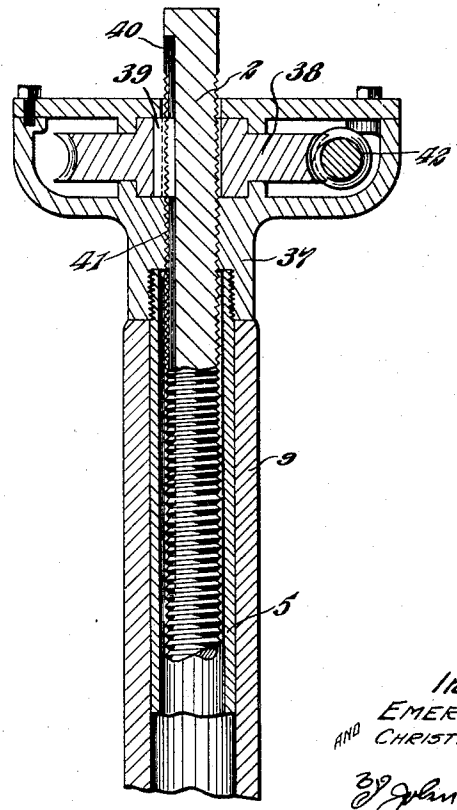

Inventors.
EMERY E. DAVIS.
AND CHRISTIAN C. KOELN.
By John N. Brumm
Attorney.

Patented Jan. 28, 1930 1,745,207

UNITED STATES PATENT OFFICE

EMERY E. DAVIS AND CHRISTIAN C. KOELN, OF ST. LOUIS, MISSOURI, ASSIGNORS, BY MESNE ASSIGNMENTS, TO DAVIS BORING TOOL COMPANY, OF ST. LOUIS, MISSOURI, A CORPORATION OF MISSOURI

CYLINDER-REBORING MACHINE

Application filed July 5, 1924. Serial No. 724,358.

This invention relates to boring devices and more particularly to devices for reboring the cylinder blocks of automobile engines.

One of the objects of this invention is to provide a device by means of which a cylinder may be rebored or reamed quickly and accurately by hand.

Another object is to provide such a device which may be mounted on the cylinder block itself so as to guide the tool during the operation.

Another object is to provide such a device in which the tool may be adjusted without removing the same.

Further objects will appear from the detail description taken in connection with the accompanying drawings, in which:

Figure 1 represents a side view of a reaming device embodying this invention;

Figure 2 is a front view, partly in section;

Figure 3 is a top view of Figure 1;

Figure 4 is a perspective view showing the device in place on a cylinder block;

Figure 5 is an enlarged detail, partly in section, of the adjustable reamer;

Figure 6 is a section on line 6—6, Figure 1;

Figure 7 is an enlarged detail, partly in section, of the ratchet device for rotating the reamer;

Figure 8 is a plan view of the power device for rotating the reamer; and

Figure 9 is a vertical section of the upper part of the device with the power drive in place thereon.

Referring to the accompanying drawings, the device comprises a shank having a guide portion 1 and a feed screw 2, the end 3 of the shank being squared to receive means for rotating the same. On the end of the shank a reamer 4 which, in the present instance, is shown as of the adjustable type is mounted. A sleeve 5 is provided along a portion of the interior thereof with a guide bearing 6 adapted for cooperation with the guide portion 1 of the shank to guide the reamer during its operation. The upper end of the sleeve 5 is provided with a thread 7 by means of which a nut 8 may be attached to the sleeve. The nut 8 is adapted for cooperation with the feed screw 2 of the shank to feed the same when rotated. The sleeve 5 is mounted for vertical sliding movement in a support 9, the upper end of which is split as indicated at 10 and provided with ears 11 adapted to receive a clamping screw 12 by means of which the sleeve 5 may be clamped in the support 9. This construction provides means for clamping the sleeve 5 in the support so that the nut 8 may be effective for feeding the reamer when the shank is rotated. When the reamer has completed its operation, the screw 12 may be loosened so as to release the sleeve 5, permitting the same to be raised in the support so as to withdraw the reamer from the work. This makes it unnecessary to return the reamer by reversing the rotation of the screw, as by such an operation the work is liable to be damaged.

The support 9 is provided with a base 13 to which are pivoted a number of supporting brackets 14. These brackets are pivoted to the base or support 9 by means of bolts 15, whose heads are counter-sunk in the brackets 14 so as to provide a smooth bottom face for these brackets. Each bracket is provided with an elongated arcuate slot 16 extending in a general radial direction from the pivot 15. By means of these brackets 14, the base 9 may be mounted on the work by means of bolts engaging the standard bolt-holes already in the cylinder block provided for fastening the cylinder head or other parts thereto. The brackets 14 may be swung about their pivots so as to register with any such bolt holes lying within their radius, so that the base may be mounted on the work with the center line of the shank in any desired position by suitably adjusting these brackets. The shank may thus be accurately alined with any cylinder bore. In some types of cars the bore of the rearmost cylinder is located quite close to the rear end of the hood, just under the wind-shield. This often provides but little space in which to mount a bracket in alinement with this last cylinder bore on account of the danger of interfering with the hood or other part of the housing. In order to provide for spacing the support 9 as closely as possible to such an obstruction, the base 13 thereof is constructed to lie all on one side of the shank and the other part of

the support 9 is cut away as shown at 17 so as to provide a minimum projection beyond the center line. This makes it possible to use this bracket close up to any such obstruction so that it may be used for boring the rearmost cylinder. The vertical height of all the brackets 14 is made exactly the same so that the shank may be maintained in perfect alinement with the cylinder bore at all times.

When reboring such cylinders it is often necessary to bore them to odd sizes, so that it is frequently necessary to adjust the reamer to a size considerably different from the standard bores. Since it is an unhandy operation to do this with an ordinary reamer where the same must be removed from the shank for adjustment, means are provided for adjusting the reamer without removing the same from the shank. For the sake of illustration, a reamer of the type illustrated in Figure 5 may be provided. This reamer is provided with a head 18 having a bore 19 adapted to fit the shank and a recess 20 for receiving a dog or clutch for driving the reamer. The head 18 is provided with a series of slots 21 in which a series of cutter-blades 22 are adapted to move for adjustment. The adjustment is accomplished by means of an adjusting nut 23 engaging a thread on the rear of the head 18 and abutting against the heels of the blades 22. This nut may be provided with a set screw 24 engaging a clamping block 25 for clamping the nut 23 in adjusted position. It will be evident that with this reamer it is only necessary to loosen the set screw 24 and turn the reamer or the nut 23 to adjust the blades.

In accordance with this invention, the nut 23 is provided with a notch or recess 26 in the periphery thereof and open at the top. This recess is adapted to receive a dog 27 on the end of a sliding pin 28 mounted in a boss 29 on the base 13. The pin 28 may be fixed in adjusted position by a set screw 30. With this arrangement the reamer may be adjusted by raising the same until the dog 27 enters the recess 26, then loosening the set screw 24 and rotating the shank so as to turn the head 18 in the nut 23 until the required adjustment is attained. There is thus provided a quick and easy means for readjusting the reamer.

In order to rotate the shank for operating the reamer, a manually operated ratchet wrench, such as shown in Figure 7, may be provided. This wrench comprises a plate 31 provided with a rectangular recess 32 adapted to fit the squared end 3 of the shank. The outer periphery of the plate 31 is provided with ratchet teeth 33 adapted to engage a spring-pressed pawl 34 mounted in a ring 35 within which the plate 31 is adapted to rotate. The ring 35 may have attached thereto radially extending handles 36 for manual operation of the wrench. It will be noted that these handles are out of alinement with one another, their axes making an angle of considerably less than 180°. This construction provides that the wrench may be used for rotating the shank, even when operating on the rearmost cylinder and close to the rear of the hood. In this position the rear part of the hood or the wind-shield might interfere with the operation of a wrench having handles in alinement. With the present device a certain angular movement is permitted in spite of these obstructions, so that by rocking the wrench to and fro, the ratchet will operate to rotate the reamer.

Power means may also be used for rotating the shank as illustrated in Figures 8 and 9. In this case the nut 8 is replaced by a head 37 in which is mounted a worm-wheel 38 having a key 39 working in a slot 40 in the feed-screw 2 so as to permit the screw to work downwardly through the worm-wheel 38 while being rotated. The head 37 is further provided with a thread 41 adapted for cooperation with the feed-screw 2 to feed the shank. Cooperating with the worm-wheel 38 is a worm 42 mounted on a transverse shaft provided at each end with a connection 43 for attachment to a suitable source of power. Since such a source of power as ordinarily available is capable of rotating in only one direction, two oppositely disposed connections 43 are provided so that said source may be attached at either one. Thus the proper direction of rotation of the shank may be obtained regardless of the direction of rotation of the power source. Such a connection may be made by means of a flexible shaft or other suitable well known device.

It will be seen, therefore, that in accordance with this invention a simple and convenient device is provided for reboring or reaming engine cylinders. This device is capable of being mounted directly on the work and accurately alined with the cylinder bore. Means are provided for guiding the reamer during its operation and feeding the same positively. At the completion of the reaming operation the reamer may be withdrawn without reverse rotation, so that the work will not be marred thereby. Accurate boring to size is insured by simple and convenient means for adjusting the reamer while in place on the shaft. Manual operating means are provided so that the operation may be carried out anywhere regardless of whether a source of driving power is available. At the same time power drive is provided for such installations as have power drive available.

It is obvious that various changes may be made in details of construction without departing from the spirit of this invention; it is, therefore, to be understood that this invention is not to be limited to the specific details shown and described.

Having thus described the invention, what is claimed is:

1. A device for reaming engine cylinders, comprising, a shank having a threaded portion, and a reamer thereon, means for rotating said shank, a support adapted for attachment to the work, a guide mounted for movement through said support to variable positions therein, and in which said shank is adapted to slide, feeding means cooperative with said threaded portion and detachably engaging said guide and movable therewith, means for fixing said guide in position on said support adapted to cause feeding movement of said shank when the latter is turned and for releasing said guide to permit withdrawal of said reamer.

2. A device for reaming engine cylinders, comprising, a shank having a threaded portion, a reamer thereon, means for rotating said shank, a sleeve having a guide portion adapted to receive and guide said shank, feeding means detachably engaging said sleeve and cooperative with said threaded portion to feed said reamer when the shank is turned in said sleeve, a support for said sleeve in which said sleeve is axially movable, and means for fixing said sleeve in any axial position thereof on said support to feed said shank, said means being releasable to permit withdrawal of said reamer.

3. A device for reaming engine cylinders, comprising, a shank having a threaded portion, a reamer thereon, means for rotating said shank, a sleeve having a guide portion adapted to receive and guide said shank, feeding means detachably engaging said sleeve and cooperative with said threaded portion to feed said reamer when said shank is turned, a support for said sleeve attachable to the work and in which said sleeve is axially movable, and means for fixing said sleeve in any axial position thereof on said support, said means being releasable to permit withdrawal of said reamer.

4. A device for reaming engine cylinders, comprising, a shank having a threaded portion, a reamer thereon, means for rotating said shank, a sleeve having a guide portion adapted to receive and guide said shank, feeding means detachably engaging said sleeve and cooperative with said threaded portions to feed said reamer when said shank is turned, a support for said sleeve attachable to the work, and in which said sleeve is axially movable, and a releasable clamp adapted to fix said sleeve in any axial position thereof on said support.

5. A device for reaming engine cylinders, comprising a support having a base, means for mounting said support on a cylinder block, a guide mounted for adjustment axially on said support, a shank mounted for turning and sliding movement in said guide and having a threaded portion, a reamer on said shank, and feeding means cooperative with said threaded portion and detachably engaging said guide and adapted to feed said shank therealong when said shank is turned.

6. A device for reaming engine cylinders, comprising, a support having a base, means for mounting said support on a cylinder block, a guide mounted for adjustment axially on said support, a shank mounted for turning and sliding movement in said guide and having a threaded portion, a reamer on said shank, and feeding means cooperative with said threaded portion and detachably engaging said guide adapted to feed said shank therealong when said shank is turned, said adjustable mounting for said guide being adapted for release to permit withdrawal of said shank.

7. A device for reaming engine cylinders, comprising, a shank, a reamer thereon, adjusting means coaxial with said shank and engageable with said reamer whereby relative rotation between the means and reamer will effect adjustment of the size of said reamer, means for rotating said shank, a support adapted for attachment to the work, a guide for said shank and on said support, and means shiftable on said support adapted for engagement with said adjusting means to retain the same against rotation, whereby said shank may be operated to adjust said reamer.

8. A device for reaming engine cylinders, comprising, a shank, a reamer thereon having an adjustable cutting element, means for rotating said shank, a support for said shank, an annular member coaxial with said shank and engageable with said reamer, whereby relative rotation between the means and reamer will effect adjustment of said element and a stop shiftable on said support adapted for engagement with said annular member for adjusting the cutting element.

9. A device for reaming engine cylinders, comprising, a shank, a reamer thereon having an adjustable cutting element, means for rotating said shank, a support for said shank, an annular member coaxial with said shank and engageable with said reamer, whereby relative rotation between the means and reamer will effect adjustment of said element, and a stop shiftable on said support, said member having means adapted to engage said stop, whereby said rotating means may be operated to adjust said cutting element.

10. A device for reaming engine cylinders, comprising, a shank, a reamer thereon having an adjustable cutting element, means for rotating said shank, a support for said shank, an annular member coaxial with said shank and engageable with said reamer, whereby relative rotation between the means and reamer will effect adjustment of said element and a dog shiftable on said support, said member having a recess adapted to receive

said dog, whereby said rotating means may be operated to adjust said cutting element.

11. A device for reaming engine cylinders, comprising, a shank, a reamer thereon, a guiding support for said shank, means for rotating said shank, and a series of brackets pivoted at one end to swing on said support and provided with elongated slots adapted for registry with the standard bolt holes of the cylinder block for attaching said support to the block.

12. A device for reaming engine cylinders, comprising, a support having a base, means comprising a series of brackets pivoted to swing thereon, for attaching said support on a cylinder block, a shank mounted in said support, a reamer on said shank, means to feed said shank therealong when said shank is turned, and means for turning said shank having a pair of manipulative handles relatively out of alignment so as to permit manipulation close to an obstruction.

13. A device for reaming engine cylinders, comprising, a support having a base, means comprising a series of brackets pivoted to swing thereon, for attaching said support on a cylinder block, a shank mounted in said support, a reamer on said shank, means to feed said shank therealong when said shank is turned, and a detachable ratchet wrench for said shank having a pair of manipulative handles out of alignment with each other.

In testimony whereof we have affixed our signatures this 30th day of April, 1924.

EMERY E. DAVIS.
CHRISTIAN C. KOELN.