(12) INTERNATIONAL APPLICATION PUBLISHED UNDER THE PATENT COOPERATION TREATY (PCT)

(19) World Intellectual Property Organization
International Bureau

(43) International Publication Date
20 January 2005 (20.01.2005)

PCT

(10) International Publication Number
WO 2005/005251 A1

(51) International Patent Classification[7]: B64C 9/20, 9/16

(21) International Application Number: PCT/PL2004/000054

(22) International Filing Date: 9 July 2004 (09.07.2004)

(25) Filing Language: English

(26) Publication Language: English

(30) Priority Data:
P.361221 11 July 2003 (11.07.2003) PL

(71) Applicant *(for all designated States except US)*: **INSTYTUT LOTNICTWA** [PL/PL]; Al. Krakowska 110/114, PL-02-256 Warszawa (PL).

(72) Inventors; and

(75) Inventors/Applicants *(for US only)*: **GNAROWSKI, Wlodzimierz** [PL/PL]; ul. M. Grzegorzewskiej 3 m 28, PL-02-778 Warszawa (PL). **KANIA, Wojciech** [PL/PL]; ul. Sonaty 6 m 910, PL-02-744 Warszawa (PL). **GNAROWSKA, Anna** [PL/PL]; ul. M. Grzegorzewskiej 3 m 28, PL-02-778 Warszawa (PL).

(74) Agent: **OCHENDAL, Janina**; Al. Krakowska 110/114, Instytut Lotnictwa, PL-02-256 Warszawa (PL).

(81) Designated States *(unless otherwise indicated, for every kind of national protection available)*: AE, AG, AL, AM, AT, AU, AZ, BA, BB, BG, BR, BW, BY, BZ, CA, CH, CN, CO, CR, CU, CZ, DE, DK, DM, DZ, EC, EE, EG, ES, FI, GB, GD, GE, GH, GM, HR, HU, ID, IL, IN, IS, JP, KE, KG, KP, KR, KZ, LC, LK, LR, LS, LT, LU, LV, MA, MD, MG, MK, MN, MW, MX, MZ, NA, NI, NO, NZ, OM, PG, PH, PL, PT, RO, RU, SC, SD, SE, SG, SK, SL, SY, TJ, TM, TN, TR, TT, TZ, UA, UG, US, UZ, VC, VN, YU, ZA, ZM, ZW.

(84) Designated States *(unless otherwise indicated, for every kind of regional protection available)*: ARIPO (BW, GH, GM, KE, LS, MW, MZ, NA, SD, SL, SZ, TZ, UG, ZM, ZW), Eurasian (AM, AZ, BY, KG, KZ, MD, RU, TJ, TM), European (AT, BE, BG, CH, CY, CZ, DE, DK, EE, ES, FI, FR, GB, GR, HU, IE, IT, LU, MC, NL, PL, PT, RO, SE, SI, SK, TR), OAPI (BF, BJ, CF, CG, CI, CM, GA, GN, GQ, GW, ML, MR, NE, SN, TD, TG).

Declarations under Rule 4.17:

— *as to applicant's entitlement to apply for and be granted a patent (Rule 4.17(ii)) for the following designations AE, AG, AL, AM, AT, AU, AZ, BA, BB, BG, BR, BW, BY, BZ, CA, CH, CN, CO, CR, CU, CZ, DE, DK, DM, DZ, EC, EE,*

[Continued on next page]

(54) Title: WING OF AIRCRAFT

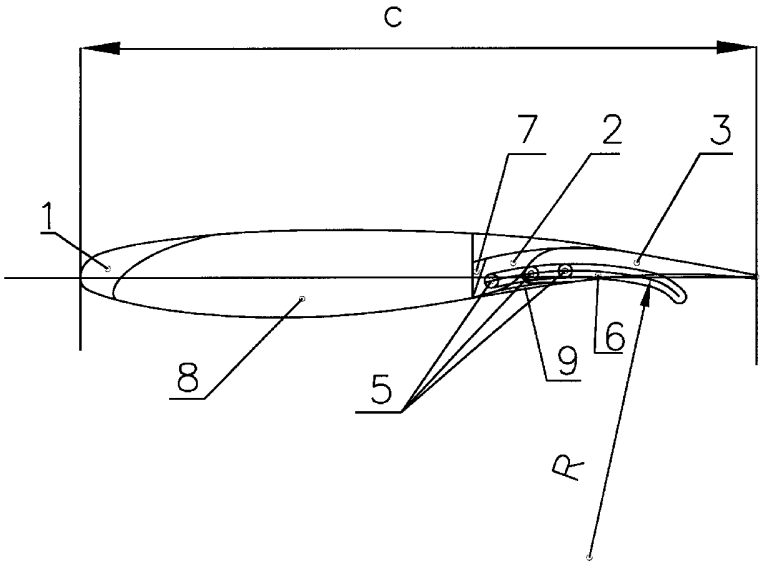

(57) Abstract: Wing of aircraft with slats (1) and one-slotted sliding flaps with driving gear, is characterized by two movable segments in each flap: fore box (2) and main flap (3), which are connected by spring actuators (4) to each other and move on rolls (5) along guides (6) of radius (R) bigger than a half chord (c) of wing airfoil section. The flap segments are located in chamber (7), which composes a sector of cylinder wall with thickness limited by both upper flow-surface of wing box (8) and closing panel (9) situated at the bottom of this box. Fore box of flap is situated in each of its position at least partially within the chamber, whereas the main flap is situated in its various positions at least partially within the chamber or fully beyond it. Driving gear of each flap is located along wing span and completely hidden in transversal outline of the wing.

WO 2005/005251 A1

EG, ES, FI, GB, GD, GE, GH, GM, HR, HU, ID, IL, IN, IS, JP, KE, KG, KP, KR, KZ, LC, LK, LR, LS, LT, LU, LV, MA, MD, MG, MK, MN, MW, MX, MZ, NA, NI, NO, NZ, OM, PG, PH, PL, PT, RO, RU, SC, SD, SE, SG, SK, SL, SY, TJ, TM, TN, TR, TT, TZ, UA, UG, UZ, VC, VN, YU, ZA, ZM, ZW, ARIPO patent (BW, GH, GM, KE, LS, MW, MZ, NA, SD, SL, SZ, TZ, UG, ZM, ZW), Eurasian patent (AM, AZ, BY, KG, KZ, MD, RU, TJ, TM), European patent (AT, BE, BG, CH, CY, CZ, DE, DK, EE, ES, FI, FR, GB, GR, HU, IE, IT, LU, MC, NL, PL, PT, RO, SE, SI, SK, TR), OAPI patent (BF, BJ, CF, CG, CI, CM, GA, GN, GQ, GW, ML, MR, NE, SN, TD, TG)

— *as to the applicant's entitlement to claim the priority of the earlier application (Rule 4.17(iii)) for the following designation US*

— *of inventorship (Rule 4.17(iv)) for US only*

Published:

— *with international search report*

For two-letter codes and other abbreviations, refer to the "Guidance Notes on Codes and Abbreviations" appearing at the beginning of each regular issue of the PCT Gazette.

Wing of aircraft

Subject matter of an invention is wing of aircraft with slats and segmented one-slotted sliding flaps with driving gear.

There are known wings of aircraft with slats and slotted sliding flaps of Fowler type composed as one segment. After flaps extending, in place of their original position there remain open chambers from underneath of wing. It generates unfavourable increase of flow drag at the bottom of wing airfoil.

Driving gear of flaps in known solutions is located crosswise of wing span and protrudes beyond transversal outline of wing, where it is shielded by under-wing fairings.

Wing of aircraft with slats and flaps according to the invention is characterized by two movable segments in each flap: fore box and main flap, which are connected by spring actuators to each other and move on rolls along guides of radius bigger than a half chord of wing airfoil section. The flap segments are located in chamber composing a sector of cylinder wall with thickness limited by both upper flow-surface of wing box and closing panel situated at the bottom of this box. Fore box of flap is situated in each of its position at least partially within the chamber, whereas main flap is situated in its various positions at least partially within the chamber or fully beyond it.

Driving gear of each flap is located along wing span and completely hidden in transversal outline of the wing.

A solution according to the invention brings profitable effects, increasing wing lift throughout three phases of flight – take-off, cruising and landing of aircraft. At cruising phase, in range of small angles of flap displacement, it affords possibilities for un-slotted increase of wing airfoil camber. At both take-off and landing phases an increase of flap displacement with simultaneous extension of wing airfoil allows to obtain optimal airfoil with slotted flow in these conditions, preventing premature flow separation on upper wall of an airfoil. For each phase of flight, also owing to panel closing chamber, there is decreased flow drag on bottom wall of an airfoil.

A location of driving gear of each wing flap along wing span so, that it is completely hidden in transversal outline of the wing, allows either to eliminate, or significant dimension reduction of under-wing fairings shielding driving gear in traditional solutions. It leads to a decrease of wing drag, and as a consequence whole aircraft, of about 1.5 %.

A wing of aircraft may be equipped, along span of trailing edge with greater number of flaps (e.g. over a dozen). It allows to obtain following utility characteristics of wing:

- high coefficient of lift,
- optimal distribution of both circulation and lift along span, according to flight phase, due to an analysis of both induced drag and weight of structure,
- elimination of conventional lateral control in form of ailerons or flaperons.

The object of the invention is shown as exemplary embodiment in drawing, in which fig.1 presents wing airfoil section according to the invention, with indication of both guides radius and airfoil chord, and following figures present the same airfoil section: fig.2 – in cruising phase for smooth configuration, fig.3 – in cruising phase for increased camber configuration, fig.4 – in take-off phase, fig.5 – in landing phase, while fig.6 presents segment of wing, according to the invention, with built in driving gear, at top view, in cruising phase, fig.7 – cross section of this segment, fig.8 – the same

segment at top view, in landing phase. fig.9 – cross section of this segment, fig.10 presents driving gear of flap with its main components, at top half-view, fig.11 – section of this gear marked as A-A on fig.10, and fig.12 – section of this gear marked as B-B on fig.10.

Wing of aircraft is equipped with slats 1 and segmented sliding flaps. Two movable segments in each flap: fore box 2 and main flap 3, are connected by spring actuators 4 to each other. The segments move on rolls 5 along guides 6 of radius R bigger than a half chord c of wing airfoil section. They are located in chamber 7, which composes a sector of cylinder wall with thickness limited by both upper flow-surface of wing box 8 and closing panel 9 situated at the bottom of this box.

The driving gear of each flap is located along wing span and completely hidden in transversal outline of the wing. It is fixed on rear plane 10 of wing box 8, perpendicular to airfoil section chord c.

Main flap 3 is moved forward by pusher 11, connected on one end with flap ferrule 12, and on other one with trolley 13 sliding along guide 14 on screw 15 powered by Cardan joint 16, by hydraulic engine 17 with transmission gear 18. A motion of fore box 2 results from its connection with main flap 3 by spring actuators 4.

During an aircraft cruising phase, the driving gear of flaps gives possibility to move main flap 3 forward so the wing airfoil both cambers slightly and elongates a little; at the same time fore box 2 is totally situated within chamber 7, and the main flap remains at partial contact with the chamber. During aircraft take-off and landing phases the driving gear of flaps generates protrusion of main flap 3 fully beyond chamber 7; at the same time fore box 2 partially contacts with the box. In effect it gives elongated wing airfoil with one slot flow only.

Claims

1. Wing of aircraft with slats and segmented one-slotted sliding flaps with driving gear, characterized in that each flap comprises two movable segments: fore box (2) and main flap (3) connected by spring actuators (4) to each other and moving on rolls (5) along guides (6) of radius (R) bigger than a half chord (c) of wing airfoil section, which the segments are located in chamber (7) composing a sector of cylinder wall with thickness limited by both upper flow-surface of wing box (8) and closing panel (9) situated at the bottom of this box; at the same time fore box (2) is situated in each of its position at least partially within the chamber, whereas the main flap is situated in its various positions at least partially within the chamber or fully beyond it.
2. Wing of aircraft as claimed in Claim 1, characterized in that driving gear of each flap is located along wing span and completely hidden in transversal outline of the wing.

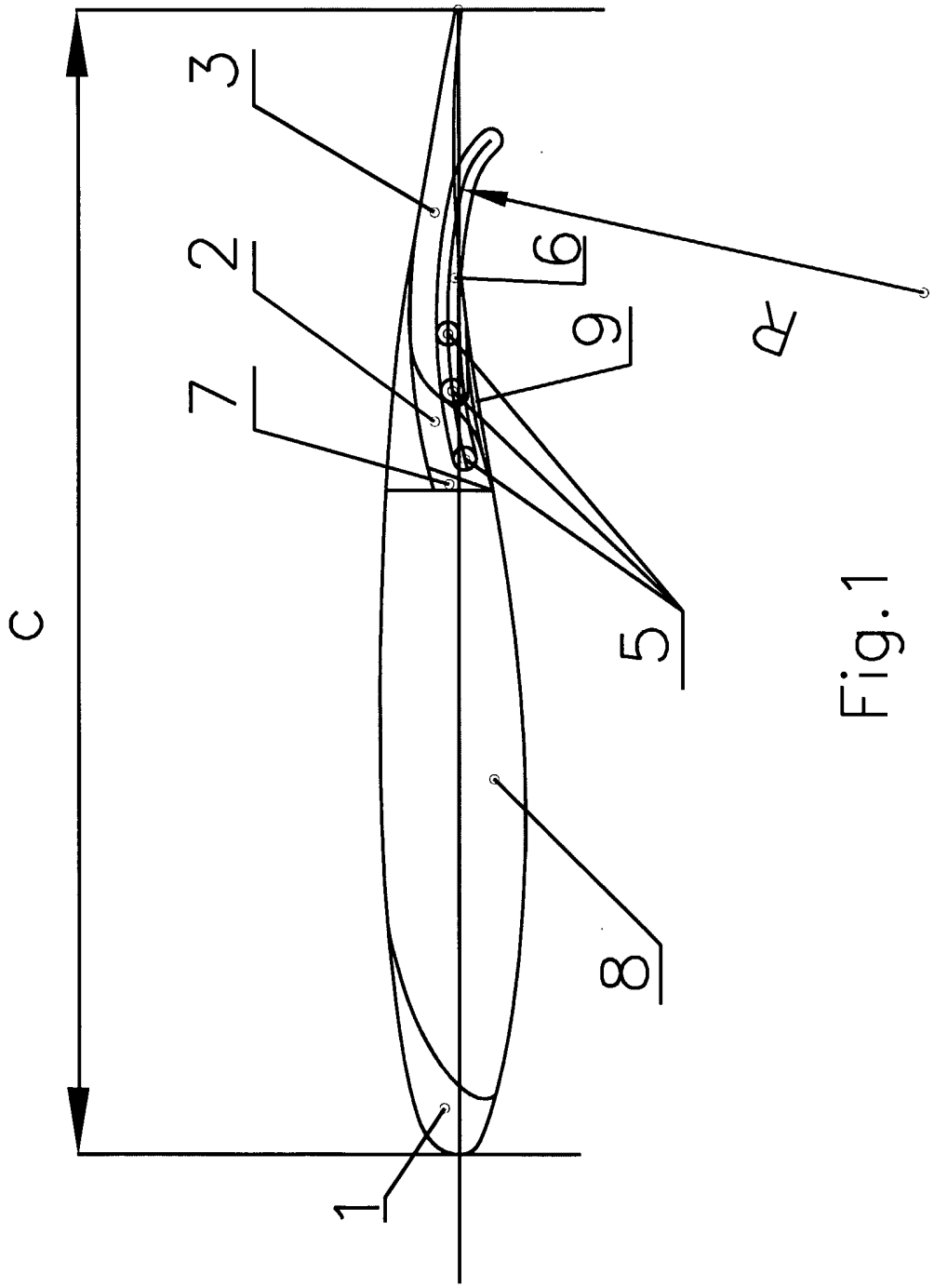

Fig.1

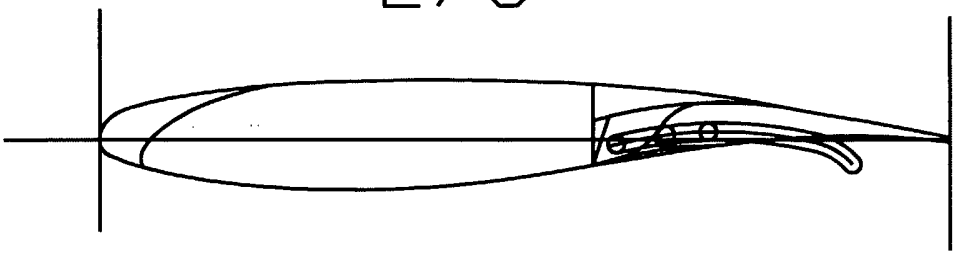

Fig. 2

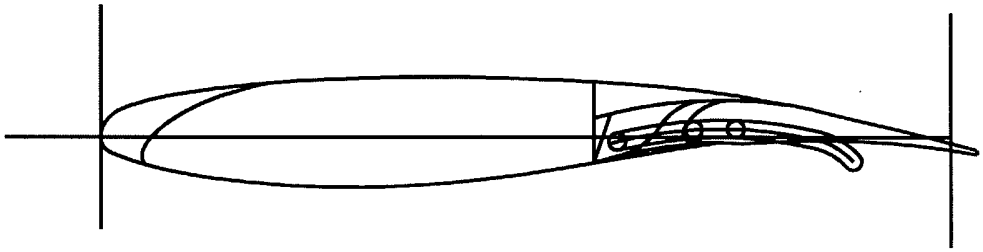

Fig. 3

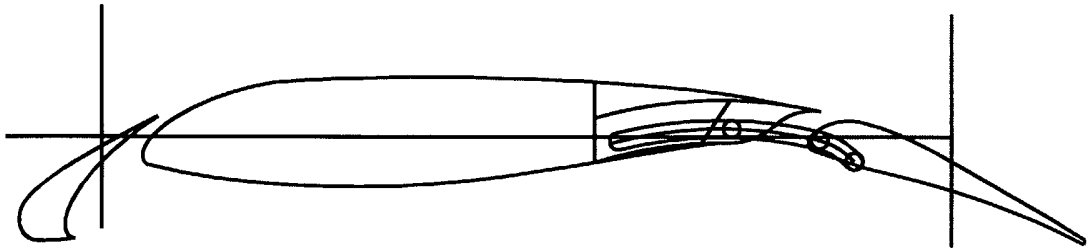

Fig. 4

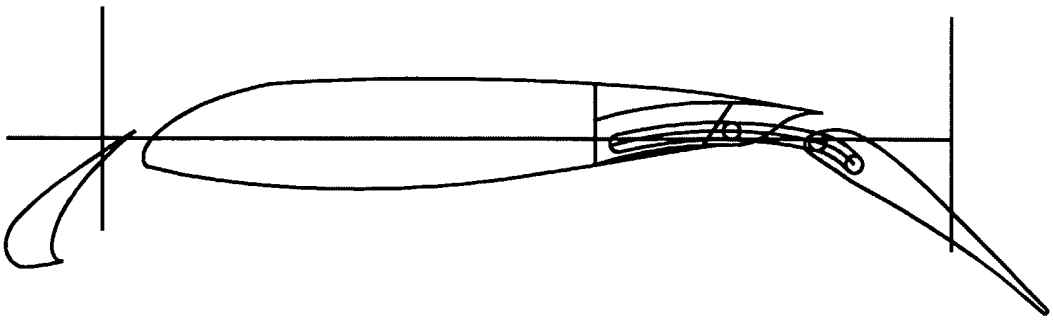

Fig. 5

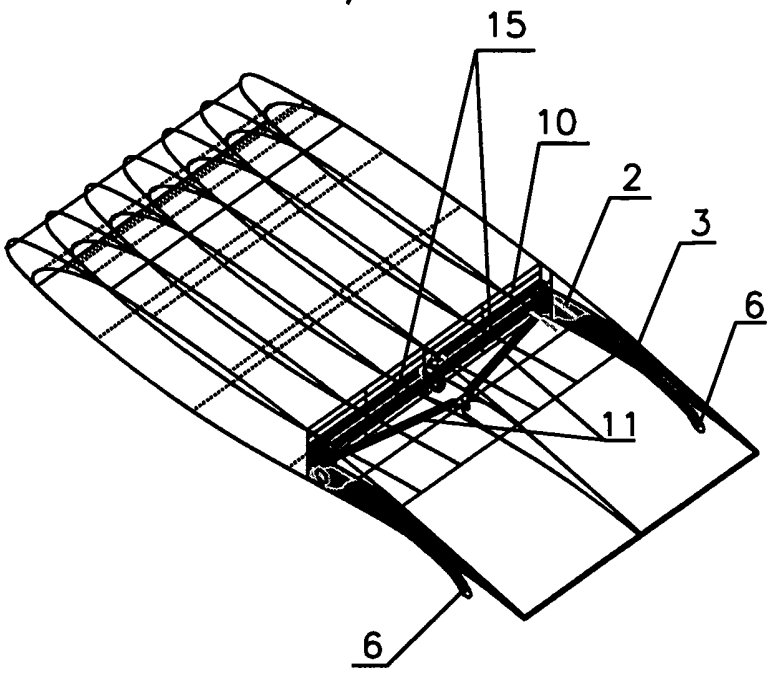

Fig. 6

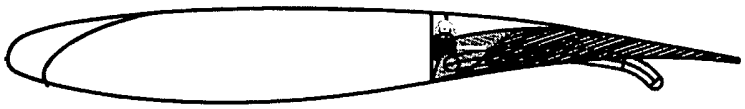

Fig. 7

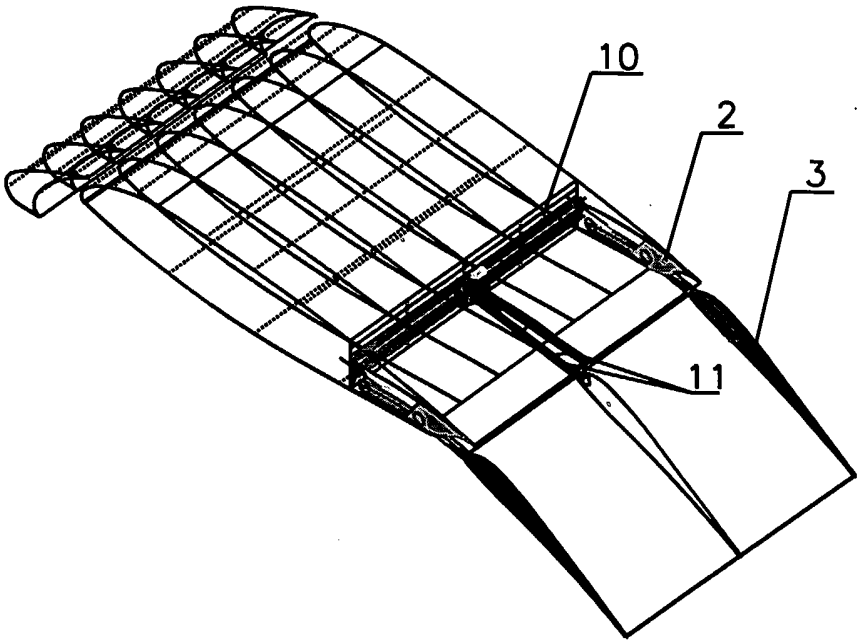

Fig. 8

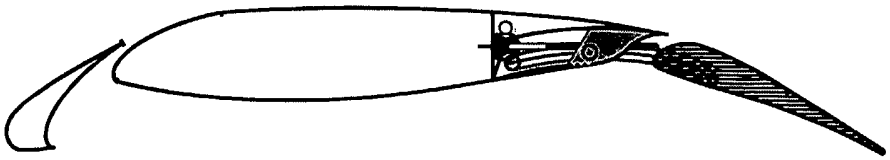

Fig. 9

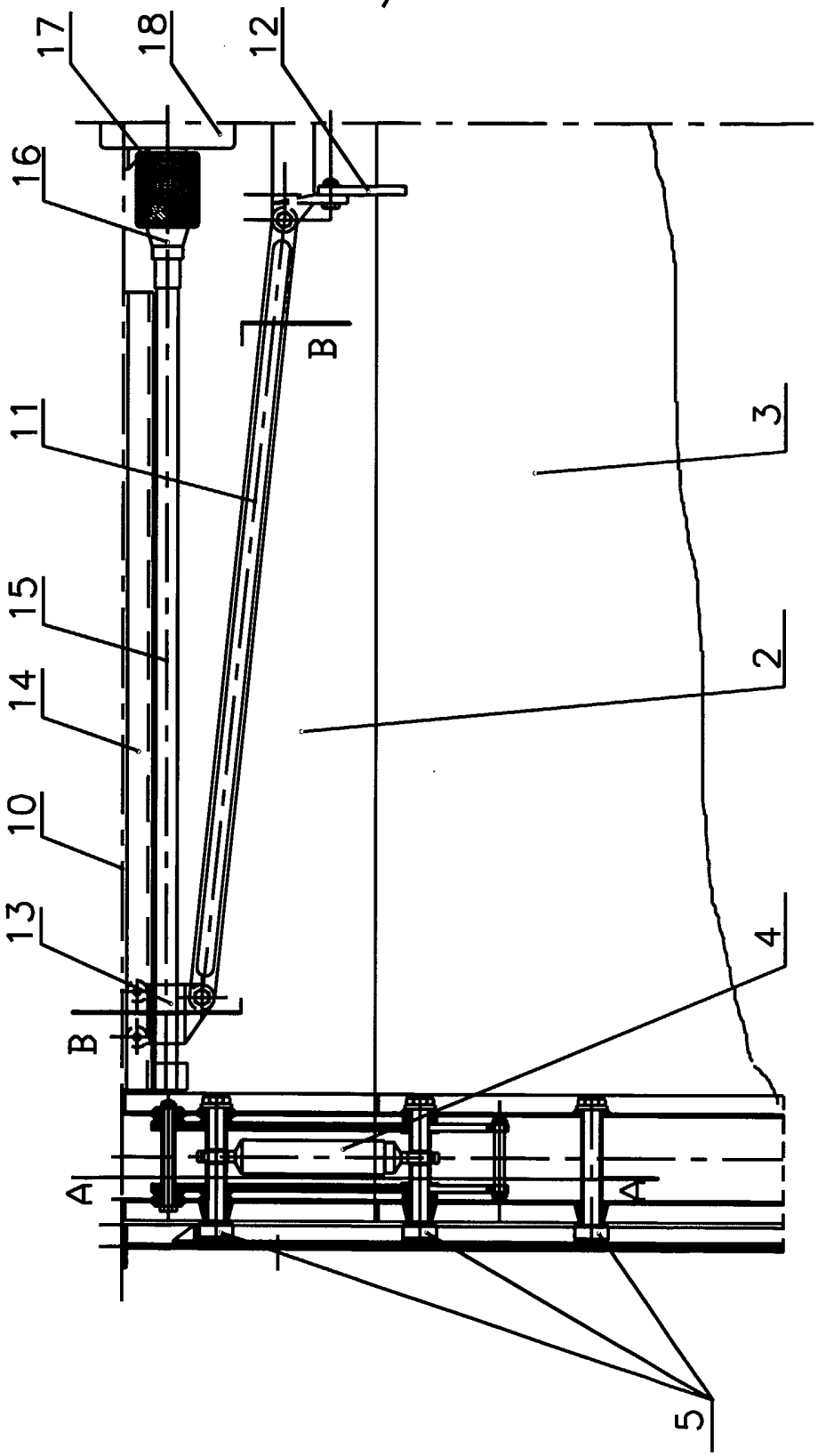

Fig. 10

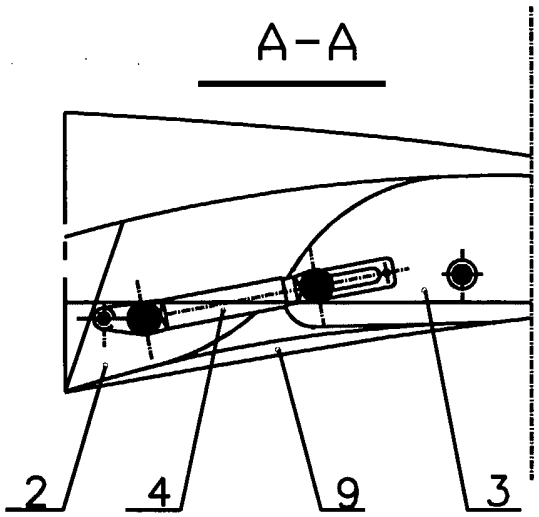

Fig. 11

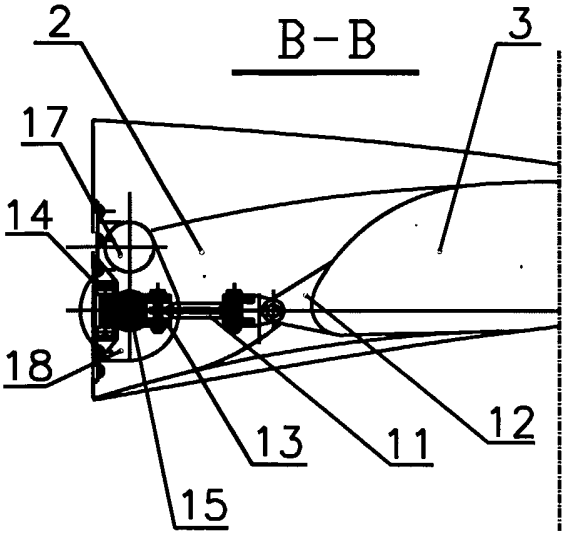

Fig. 12

INTERNATIONAL SEARCH REPORT

International Application No
PCT/PL2004/000054

A. CLASSIFICATION OF SUBJECT MATTER
IPC 7 B64C9/20 B64C9/16

According to International Patent Classification (IPC) or to both national classification and IPC

B. FIELDS SEARCHED

Minimum documentation searched (classification system followed by classification symbols)
IPC 7 B64C

Documentation searched other than minimum documentation to the extent that such documents are included in the fields searched

Electronic data base consulted during the international search (name of data base and, where practical, search terms used)

EPO-Internal

C. DOCUMENTS CONSIDERED TO BE RELEVANT

Category °	Citation of document, with indication, where appropriate, of the relevant passages	Relevant to claim No.
X	DE 748 146 C (JOSEPH KSOLL) 27 October 1944 (1944-10-27) page 2, line 35 - line 75 page 3, line 4 - line 8 figures 1a-1c,6 -----	1,2
A	US 4 725 026 A (JENDRIAN HENRY ET AL) 16 February 1988 (1988-02-16) figures -----	1,2

☐ Further documents are listed in the continuation of box C.

☒ Patent family members are listed in annex.

° Special categories of cited documents :

- "A" document defining the general state of the art which is not considered to be of particular relevance
- "E" earlier document but published on or after the international filing date
- "L" document which may throw doubts on priority claim(s) or which is cited to establish the publication date of another citation or other special reason (as specified)
- "O" document referring to an oral disclosure, use, exhibition or other means
- "P" document published prior to the international filing date but later than the priority date claimed
- "T" later document published after the international filing date or priority date and not in conflict with the application but cited to understand the principle or theory underlying the invention
- "X" document of particular relevance; the claimed invention cannot be considered novel or cannot be considered to involve an inventive step when the document is taken alone
- "Y" document of particular relevance; the claimed invention cannot be considered to involve an inventive step when the document is combined with one or more other such documents, such combination being obvious to a person skilled in the art.
- "&" document member of the same patent family

Date of the actual completion of the international search	Date of mailing of the international search report
25 October 2004	03/11/2004

Name and mailing address of the ISA	Authorized officer
European Patent Office, P.B. 5818 Patentlaan 2 NL - 2280 HV Rijswijk Tel. (+31-70) 340-2040, Tx. 31 651 epo nl, Fax: (+31-70) 340-3016	Estrela y Calpe, J

INTERNATIONAL SEARCH REPORT

Information on patent family members

International Application No
PCT/PL2004/000054

Patent document cited in search report		Publication date	Patent family member(s)		Publication date
DE 748146	C	27-10-1944	NONE		
US 4725026	A	16-02-1988	DE	3527497 A1	12-02-1987
			EP	0210399 A2	04-02-1987