May 12, 1942. J. H. CLEMENTS ET AL 2,282,940

PHONOGRAPH RECORDING AND PLAYING DEVICE

Filed Feb. 23, 1940 2 Sheets-Sheet 1

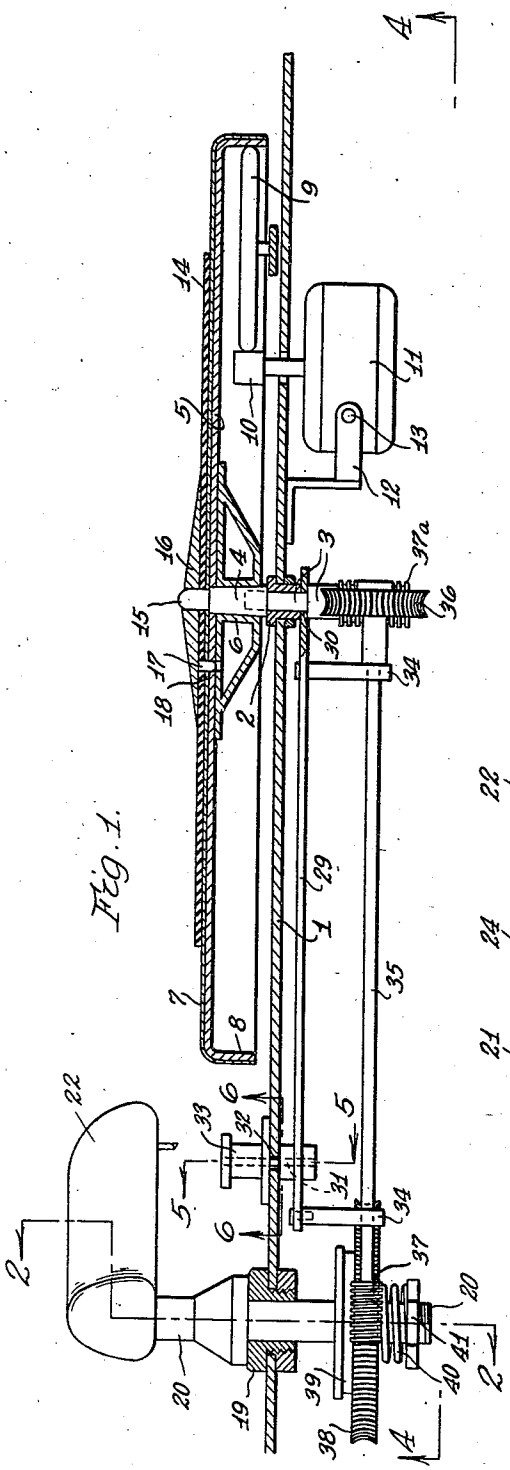

Fig. 1.

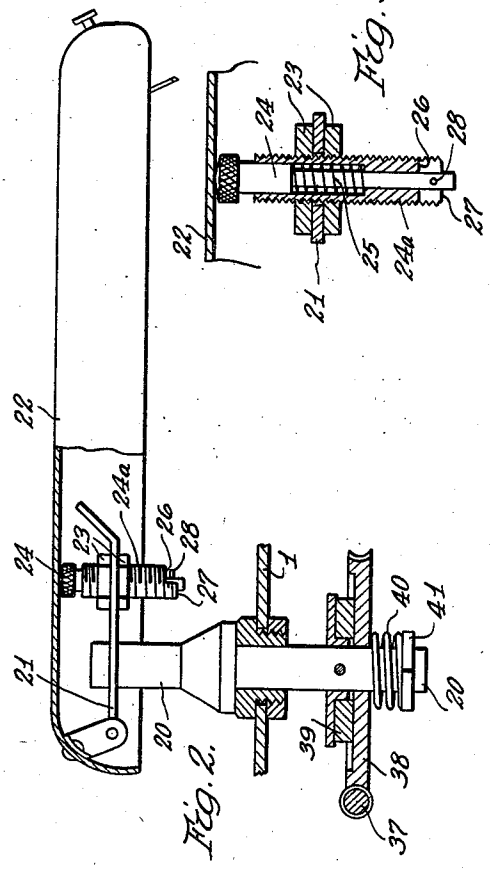

Fig. 2.

Fig. 3.

INVENTORS
James H. Clements
John T. Goodall

BY

ATTORNEY.

May 12, 1942. J. H. CLEMENTS ET AL 2,282,940

PHONOGRAPH RECORDING AND PLAYING DEVICE

Filed Feb. 23, 1940 2 Sheets-Sheet 2

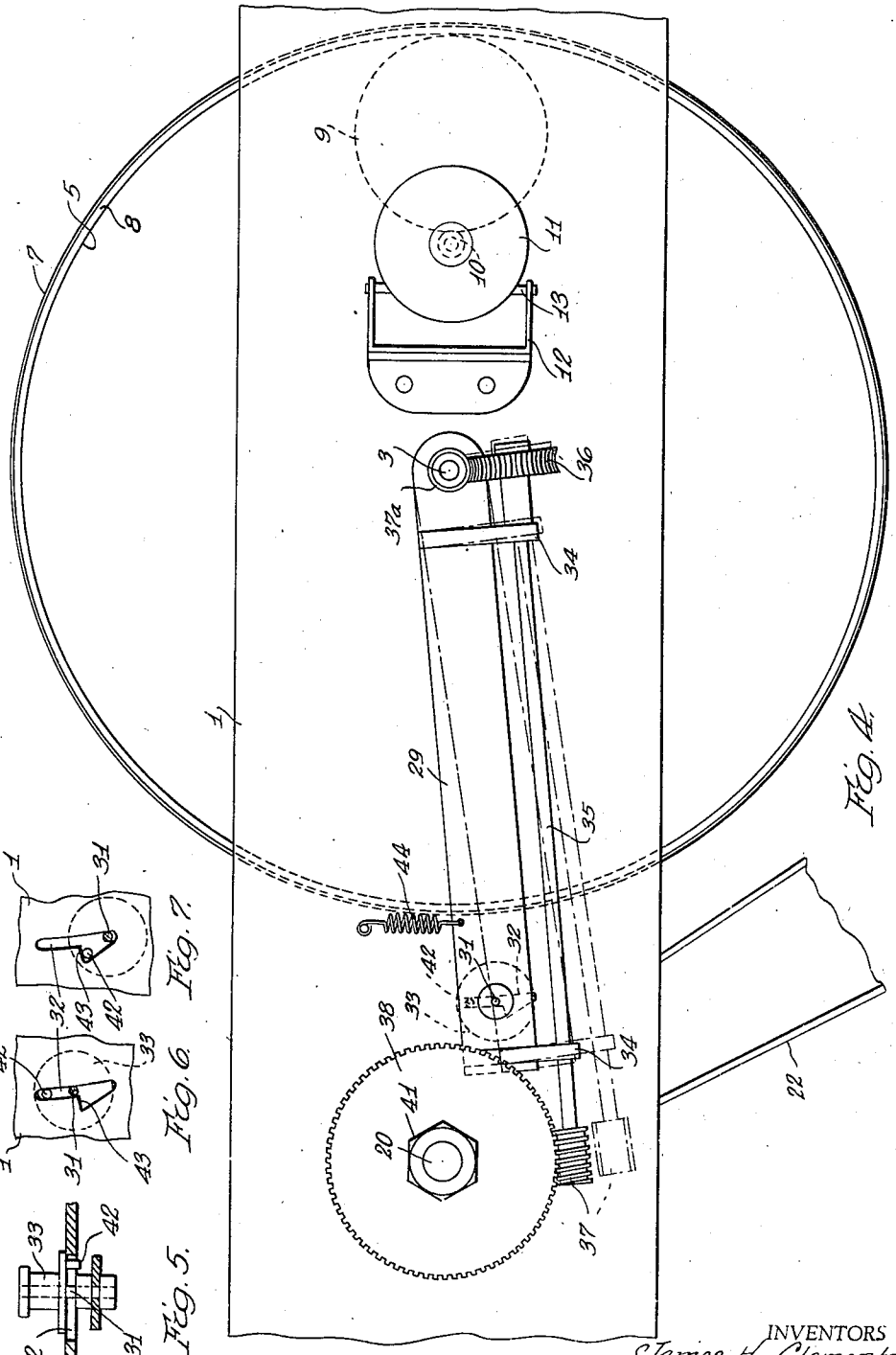

INVENTORS
James H. Clements
John T. Goodall

BY

ATTORNEY.

Patented May 12, 1942 2,282,940

UNITED STATES PATENT OFFICE

2,282,940

PHONOGRAPH RECORDING AND PLAYING DEVICE

James H. Clements and John T. Goodall, Detroit, Mich.

Application February 23, 1940, Serial No. 320,318

2 Claims. (Cl. 274—13)

This invention relates to phonographic apparatus for recording and transmitting sounds. More specifically, the apparatus is of the type used in conjunction with domestic radio receiving sets, wherein the stylus vibrating means is energized through connection with the radio when a record is being cut, and wherein the radio speaker is actuated by the stylus during playing of the record. Thus, radio programs may be recorded, and by use of a microphone, in connection with the radio set, voice and other sounds may be recorded. This association of a phonograph and radio receiving set is already known to the art and also commercially, and the invention here concerned relates more particularly to certain improvements in the apparatus for recording and transmitting the sounds.

The primary object of the invention is to provide an apparatus of the character above mentioned which is so constructed that it may be converted from a recorder to a transmitter and vice versa merely by changing the type of stylus. That is, for recording, a cutting stylus is inserted, and for transmitting the cutting stylus is replaced by a playing stylus.

Another object is to provide means for swinging the stylus arm radially inwardly of a rotating record so that the stylus cuts a spiral groove in the rotating record, and manually operable means for rendering the arm swinging means inoperative when the completed record is transcribed. More specifically, this object aims for simplicity of construction and operation, in order that the apparatus may be used by persons unskilled in mechanics, mainly for amusement purposes in the home. In this respect it is pointed out, however, that the apparatus is also intended for any other uses for which it is adapted, such as, for example, voice messages, where the message instead of being written may be recorded and the record mailed similarly to a letter.

Another object is to provide arm swinging means of the character above mentioned embodying a safety device which renders it fool proof to the extent that it will remain undamaged even though the operator forgets to render the arm swinging means inoperative when a record is being played. In this respect, the driving connection between the stylus arm and the power source is of a friction type, and embodies means for varying the friction.

Another object is to provide means for varying the pressure between the stylus and the record disc, both during cutting and playing if desired. The record discs now available on the market vary considerably both in composition and in hardness, and obviously a stylus having a light weight imposed thereon although satisfactory for softer record discs will not efficiently cut the harder discs, and when the weight is sufficient for harder discs the softer discs are cut too deep. In view of this problem the invention provides a spring means for counterbalancing the weight of the stylus arm when in one position, and adapted to be manually rendered inoperative so that the entire weight of the stylus arm may be imposed upon the stylus.

Other objects and advantages will become more fully apparent as reference is had to the accompanying drawings, wherein our invention is illustrated, and in which:

Fig. 1 is a vertical cross section of the mechanism,

Fig. 2 is a section taken on the line 2—2 of Fig. 1,

Fig. 3 is an enlarged sectional view of the stylus in counterbalance,

Fig. 4 is a bottom view, looking in the direction of the arrows 4—4 of Fig. 1,

Fig. 5 is a section taken on the line 5—5 of Fig. 1,

Fig. 6 is a section taken on the line 6—6 of Fig. 1, and

Fig. 7 is a view similar to Fig. 5 and illustrating the mechanism there shown in another operative position.

More particularly, 1 designates a plate or support, upon which the entire mechanism hereinafter described is mounted, and which is adapted to be assembled into any suitable cabinet or the like. Mounted in the support 1 is a bearing 2 which rotatably supports a vertical shaft 3 having a tapered upper end 4. A record plate 5 has a tapered center bearing 6 which fits the tapered shaft end 4, and a fabric covering 7 such as is usually provided on such plates. The plate 5 also has a depending peripheral flange 8 engaged by a friction disc 9, which is in turn contacted by a drive member 10 of a motor 11. The motor 11 is pivotally supported by a bracket 12, with the pivots 13 offset with respect to the center of gravity of the motor so that gravity acts to press the device member 10 against the disc 9, and the disc 9 against the flange 8. When the motor 11 is set in operation, the plate 7 is rotated, and through frictional contact of the bearing 6 with the shaft end 4 the shaft 3 is caused to rotate.

The plate 7 is adapted to support a record disc. As shown, the record disc 14 has a central opening fitting over the shaft extension 15, which centralizes the record disc with respect to the plate 7. Also fitted over the extension 15 is a metal disc 16, of substantial weight, and having one or more depending studs 17 which extend through apertures 18 in the record disc and plate 7. This plate, with its stud, results in a positive drive between the plate and record disc, and by its weight it tends to hold the record disc flat upon the plate 7. The disc 16 acts to prevent

injury to a cutting needle or a record after the same has been cut by providing a smooth bearing surface up which the needle may climb.

Mounted in the support 1 is a bearing 19 which rotatably supports a vertical shaft 20. On the upper end of the shaft 20 is a bracket 21 which supports a stylus arm 22 for pivotal movement about a horizontal axis. The stylus arm 22 and the stylus supporting and actuating means may be of any special or conventional construction. The one here shown is of a type at present available on the market, and therefore it appears that a detailed description thereof is unnecessary.

Mounted in the bracket 21 is an externally threaded tube 24a having nuts 23 thereon engaging opposite sides of the bracket 21 for holding the tube in different positions of adjustment. Slidable in the tube is a plunger 24 which is normally urged upwardly by a spring 25, and engages the stylus arm 22 in such manner that the weight of the arm is partially supported by the spring. The lower end of the sleeve is provided with two steps designated 26 and 27, and the lower end of the plunger 24 has a radial pin 28. When the plunger 24 is in a position beneath the step 26 the step acts to restrict upward movement of the plunger when the weight of the stylus arm is removed from the upper end of the plunger, as by pivoting the arm on the bracket 21 to insert a stylus therein. When the stylus arm is then lowered, to place the stylus in contact with a record disc on the plate 5, the spring 25 will be partially compressed at the time the stylus contacts the record disc. When it is desired to impose the full weight of the arm 22 on the stylus, the plunger 24 is manually forced downwardly and turned rotatively to position the pin 28 beneath the step 27. The step 27 holds the plunger in a lowered position, or with its upper end spaced below the plane of the stylus arm when its stylus is in contact with a record disc.

A bracket 29 has one end pivotally supported at 30 upon the vertical shaft 3 and its other end swingably supported by a pin 31 extending upwardly through a slot 32 in the support 1 and having a knob 33 on its upper end slidingly engaging the top surface of the support 1. The bracket 29 has bearings 34 thereon rotatably supporting a shaft 35. On one end of the shaft 35 is a worm gear 36 which meshes with a worm 37a on the shaft 3, and at the other end of the shaft 35 is a worm 37 which meshes with a worm gear 38 on the vertical shaft 20. As is more clearly shown in Fig. 2, the worm gear 38 is free to rotate upon the shaft 20, and is spring pressed into engagement with a friction disc 39 which is secured to the shaft 20. The means for pressing the worm gear 38 into contact with the friction disc 39 comprises a spring 40 which is compressed between a nut 41 and the worm gear 38. The nut 41 engages screwthreads on the end of the shaft 20, and may be placed in different positions to vary the pressure exerted by the spring.

When the plate 5 and shaft 3 are rotated by the motor 11 the shaft 35 is caused to rotate. Through the worm 37 and worm gear 38 the shaft 20 is moved rotatively at a greatly reduced speed, and results in swinging movement of the stylus arm 22. Thus, the stylus is caused to move inwardly radially of the record disc as the record disc is rotated. When the stylus reaches the metal disc 16 it continues its radially inward movement and climbs the inclined top surface thereof.

When a record is to be played, there is no necessity for moving the stylus as above described, inasmuch as the stylus will follow the groove in the record. Therefore, the knob 33 is manually moved from the position shown in Fig. 6 to that shown in Fig. 7, which causes the bracket 29 to move to the position shown in broken lines in Fig. 4, where the worm 37 is out of mesh with worm gear 38. A spring 44, connected to the support 1 and the bracket 29, normally urges the bracket toward a gear engaged position. The knob 33 has a pin 42 depending therefrom and into the slot 32 and the slot has a shoulder 43. As the knob is moved it is also turned, so as to dispose the pin 42 behind the shoulder 43, as shown in Fig. 7, and the pin and shoulder coact in holding the bracket 29 in the gear disengaged position.

Although a specific embodiment of the invention is illustrated and described, it will be understood that various changes may be made within the scope of the appended claims without departing from the spirit of the invention, and such changes are contemplated.

What is claimed is:

1. A phonographic apparatus comprising a shaft supported for rotation about a vertical axis, a plate carried by said shaft and adapted to receive a record disc, a second shaft supported for rotation about a vertical axis, a stylus arm pivotally mounted on said second shaft for movement about a horizontal axis, a gear loosely mounted on said second shaft, frictional means connecting said gear to said second shaft, a bracket pivoted about the axis of said first shaft, a third shaft carried by said bracket, gearing connecting said first and third shafts, a gear on said third shaft adapted to mesh with said gear on the second shaft, spring means normally pivoting said bracket to a position meshing the gears of the second and third shafts, and manually operable means connected to said bracket for pivoting said bracket to a position where the gears of the second and third shafts are out of mesh.

2. A phonographic apparatus comprising a shaft supported for rotation about a vertical axis, a plate carried by said shaft and adapted to receive a record disc, a second shaft supported for rotation about a vertical axis, a stylus arm pivotally mounted on said second shaft for movement about a horizontal axis, a gear loosely mounted on said second shaft, frictional means connecting said gear to said second shaft, a bracket pivoted about the axis of said first shaft, a third shaft carried by said bracket, gearing connecting said first and third shafts, a gear on said third shaft adapted to mesh with said gear on the second shaft, spring means normally pivoting said bracket to a position meshing the gears of the second and third shafts, manually operable means connected to said bracket for pivoting said bracket to a position where the gears of the second and third shafts are out of mesh, and releasable means for locking said bracket in said last named position.

JAMES H. CLEMENTS.
JOHN T. GOODALL.