Nov. 27, 1934. J. E. GLEASON ET AL 1,982,050

METHOD OF AND MACHINE FOR PRODUCING GEARS

Filed March 25, 1932 9 Sheets-Sheet 1

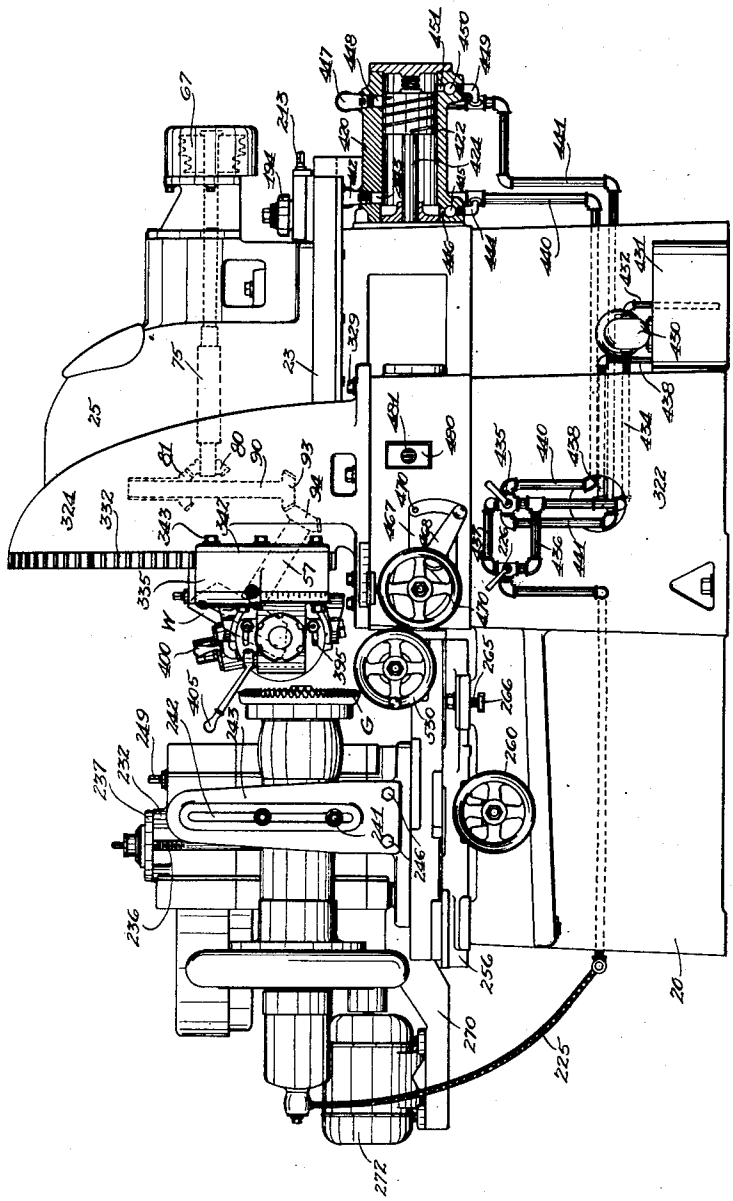

Fig. 1

INVENTORS
James E. Gleason
BY Edward W. Bullock
G. Schlesinger
their ATTORNEY

Nov. 27, 1934. J. E. GLEASON ET AL 1,982,050

METHOD OF AND MACHINE FOR PRODUCING GEARS

Filed March 25, 1932 9 Sheets-Sheet 2

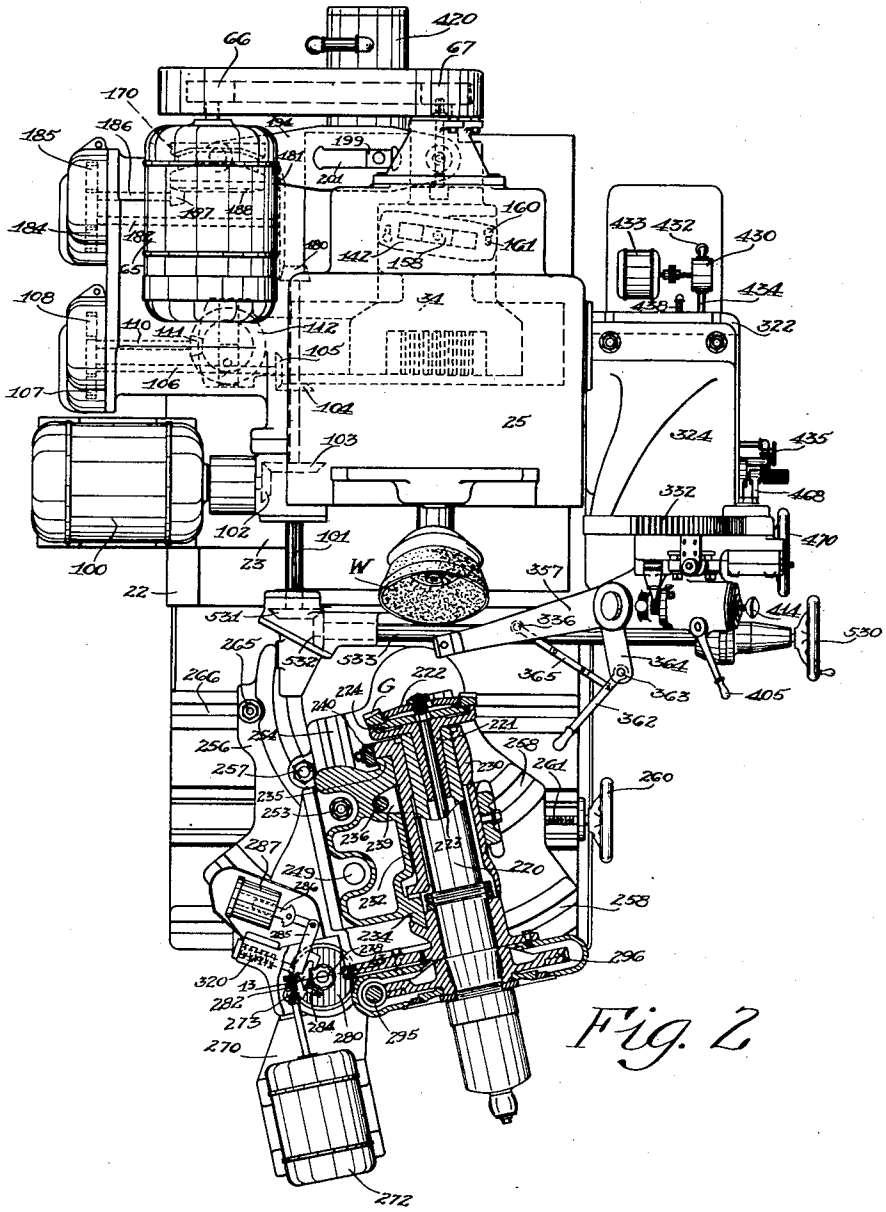

Fig. 2

INVENTORS
James E. Gleason
BY Edward W. Bullock
R. J. Wheelinger
their ATTORNEY

Nov. 27, 1934. J. E. GLEASON ET AL 1,982,050

METHOD OF AND MACHINE FOR PRODUCING GEARS

Filed March 25, 1932 9 Sheets-Sheet 3

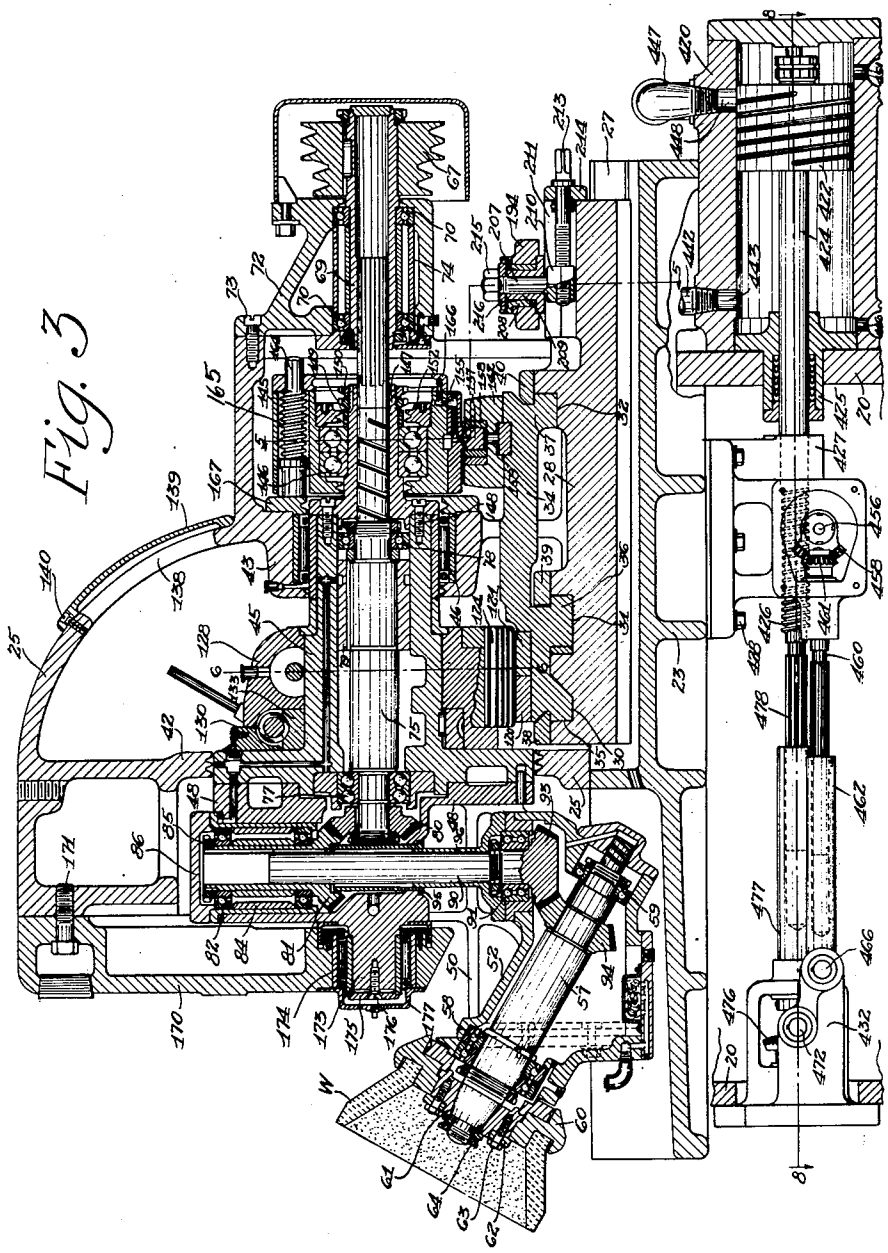

Fig. 3

INVENTORS
James E. Gleason
BY Edward W. Bullock
P. Schlesinger
their ATTORNEY

Nov. 27, 1934. J. E. GLEASON ET AL 1,982,050

METHOD OF AND MACHINE FOR PRODUCING GEARS

Filed March 25, 1932 9 Sheets-Sheet 4

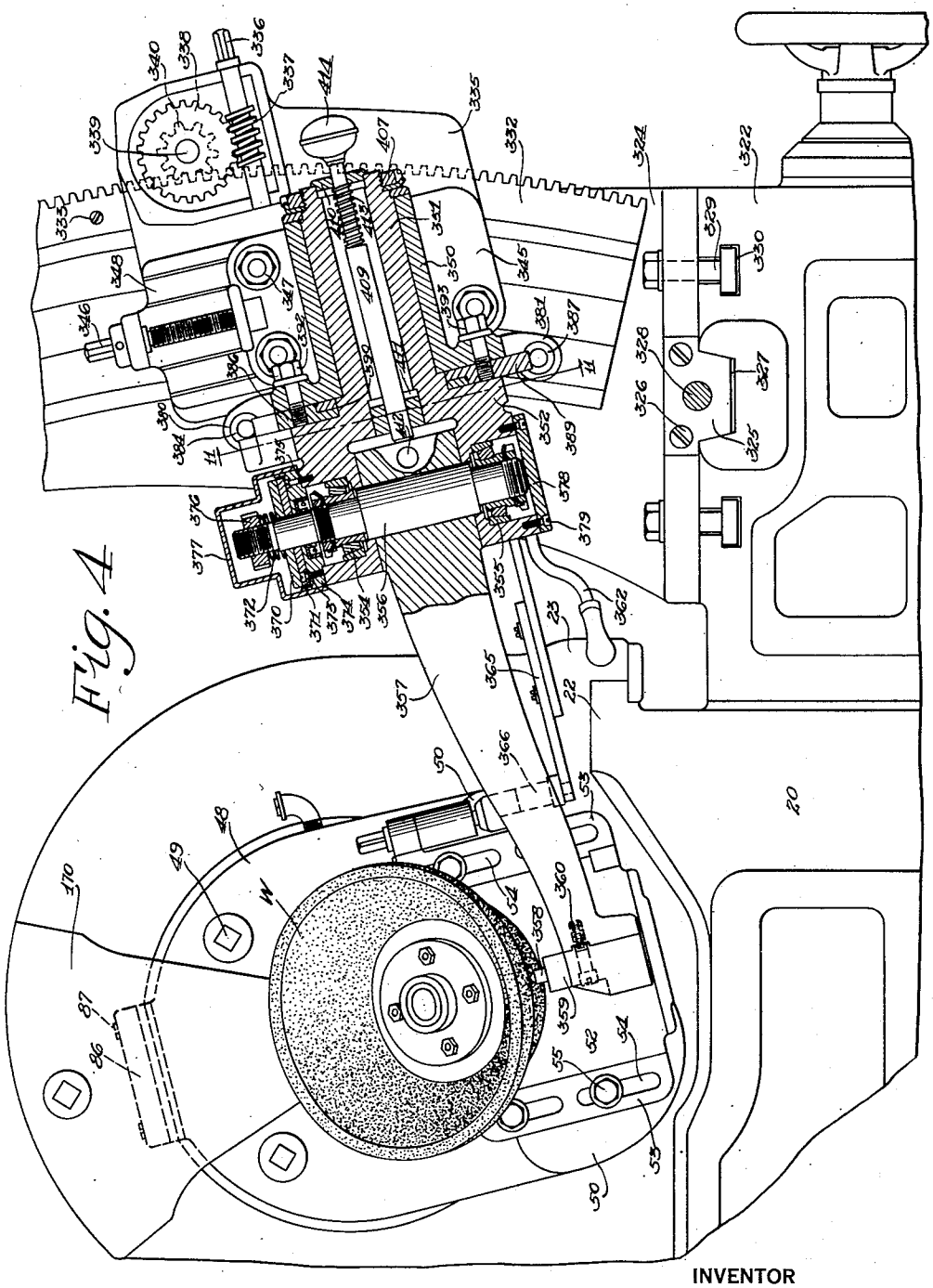

Fig. 4

INVENTOR
James E. Gleason
BY Edward W. Bullock
D. V. Schlesinger
Their ATTORNEY

Nov. 27, 1934. J. E. GLEASON ET AL 1,982,050

METHOD OF AND MACHINE FOR PRODUCING GEARS

Filed March 25, 1932 9 Sheets-Sheet 5

Fig. 5

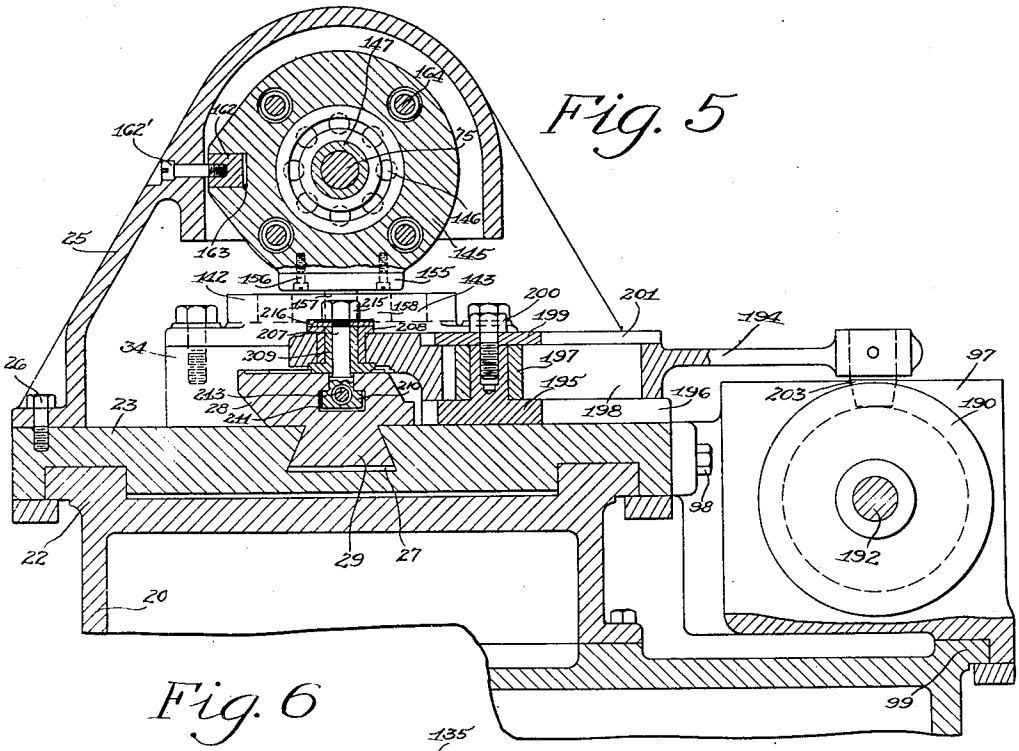

Fig. 6

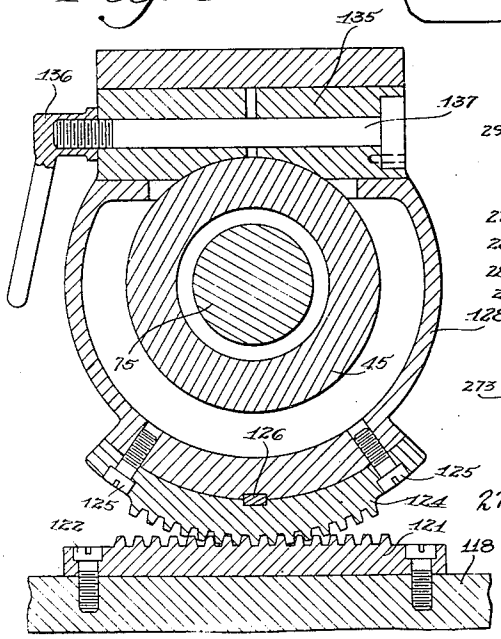

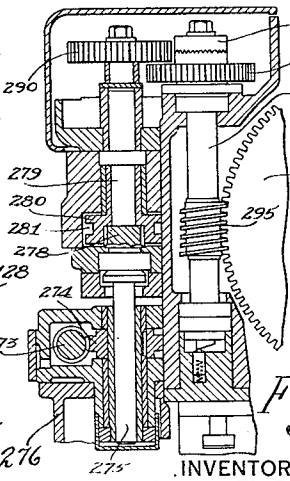

Fig. 13

INVENTORS
James E. Gleason
BY Edward W. Dullock
B. Schlesinger
their ATTORNEY

METHOD OF AND MACHINE FOR PRODUCING GEARS

Filed March 25, 1932 9 Sheets-Sheet 6

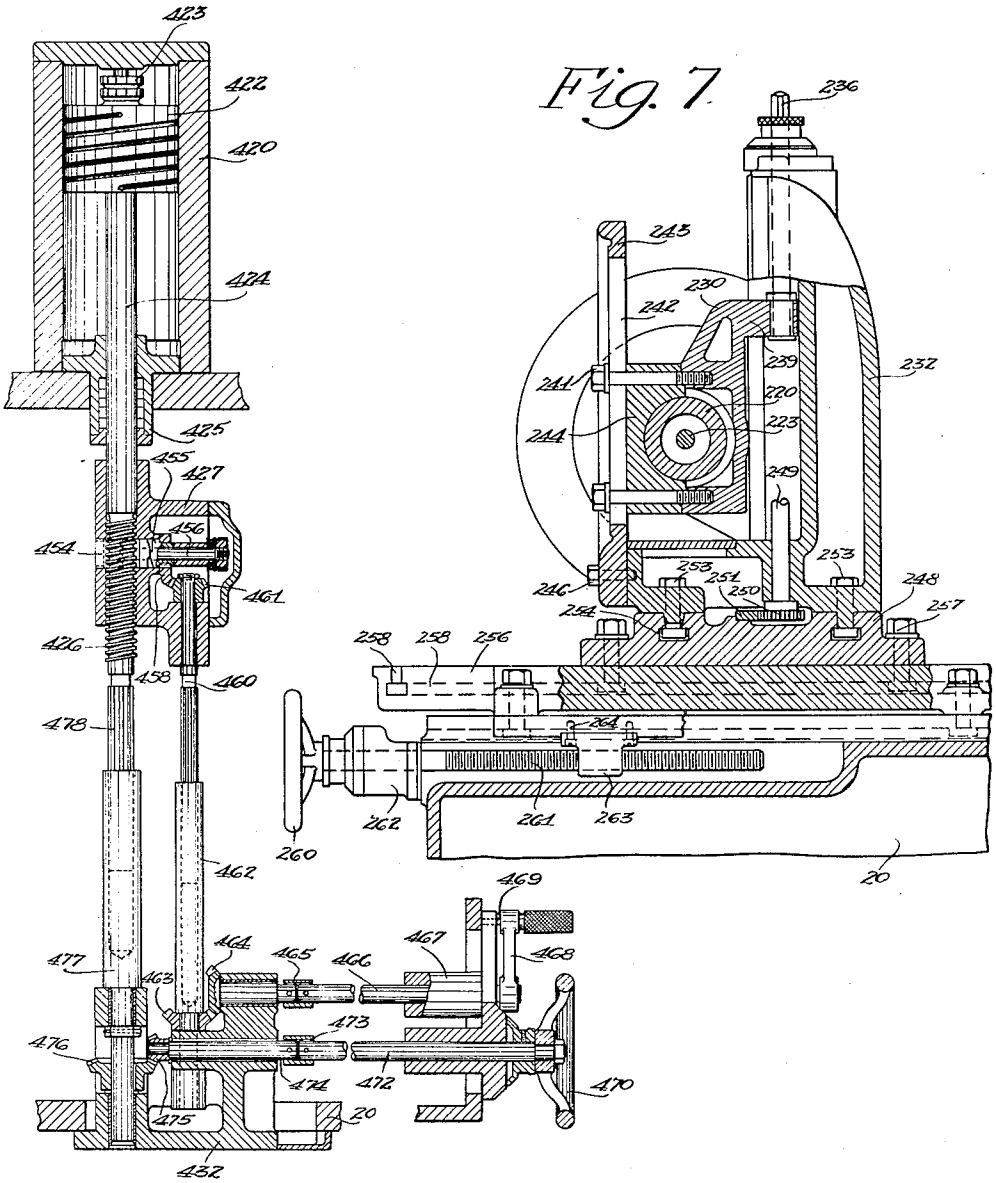

Fig. 8

INVENTORS
James E. Gleason
BY Edward W. Bullock
P. F. Wheeringer
their ATTORNEY

Nov. 27, 1934. J. E. GLEASON ET AL 1,982,050

METHOD OF AND MACHINE FOR PRODUCING GEARS

Filed March 25, 1932 9 Sheets-Sheet 7

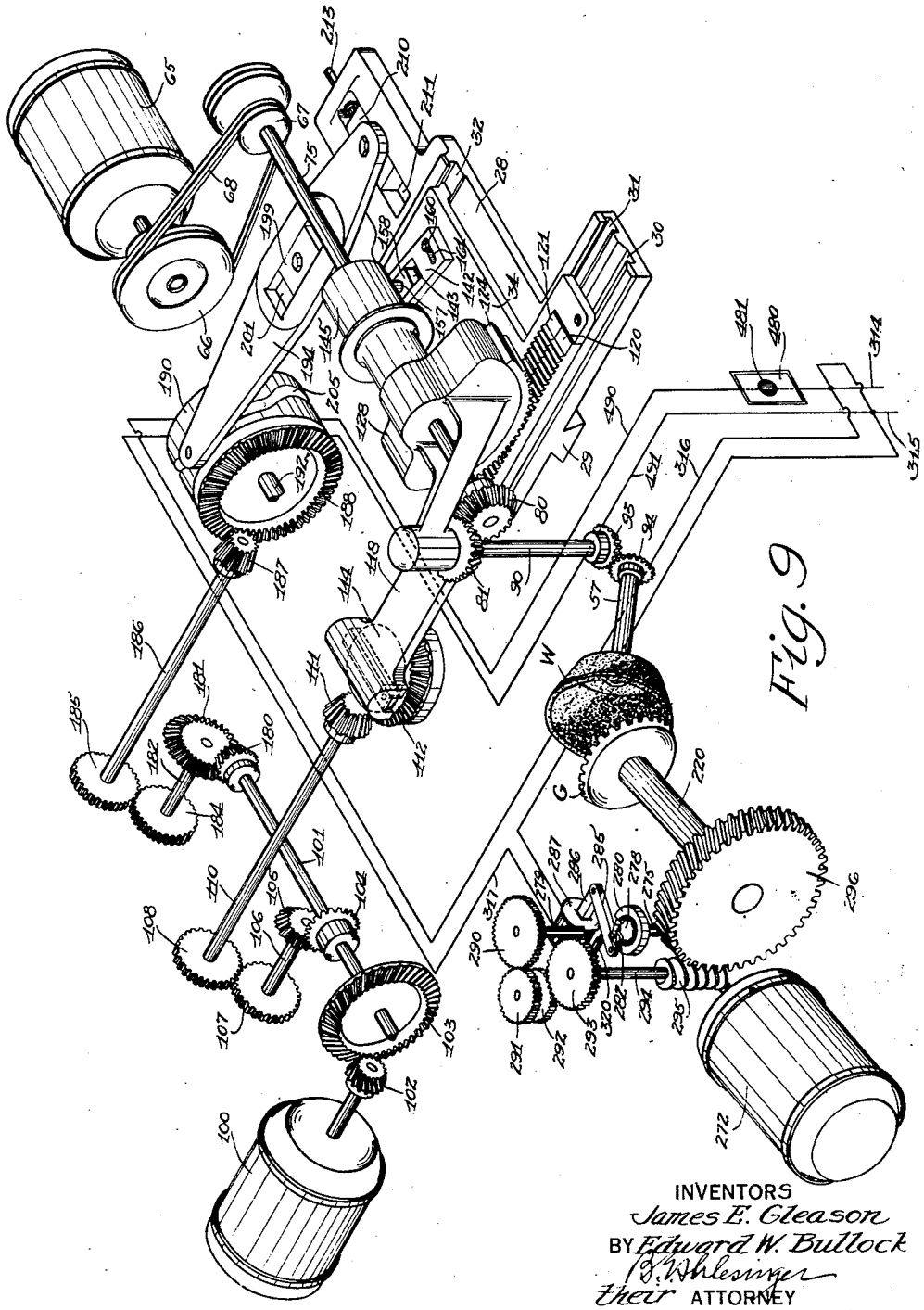

Fig. 9

INVENTORS
James E. Gleason
BY Edward W. Bullock
B. Whlesinger
their ATTORNEY

Nov. 27, 1934. J. E. GLEASON ET AL 1,982,050

METHOD OF AND MACHINE FOR PRODUCING GEARS

Filed March 25, 1932 9 Sheets-Sheet 8

Fig. 14

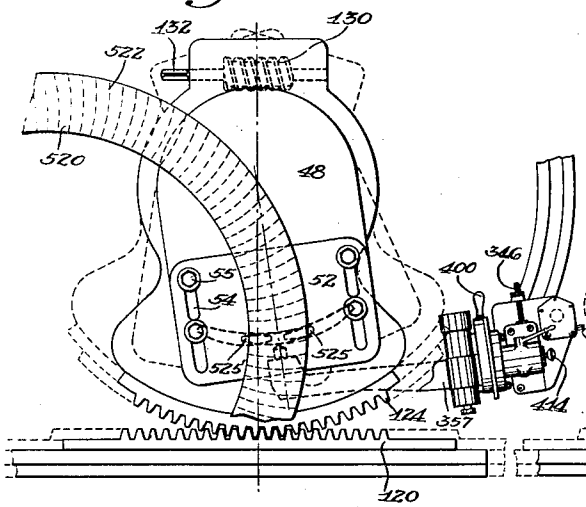

Fig. 15

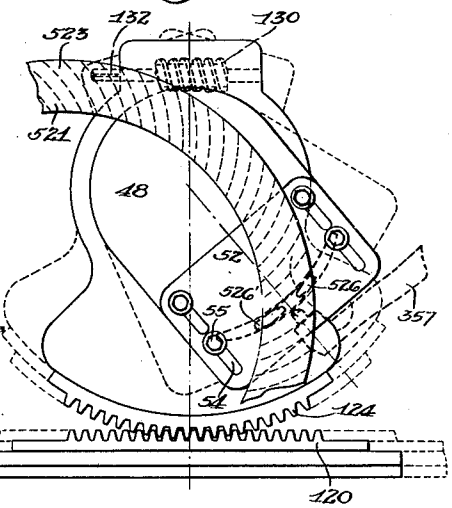

Fig. 10

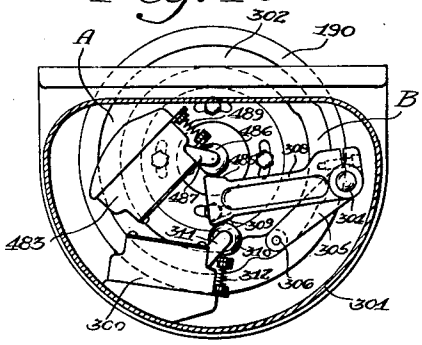

Fig. 11

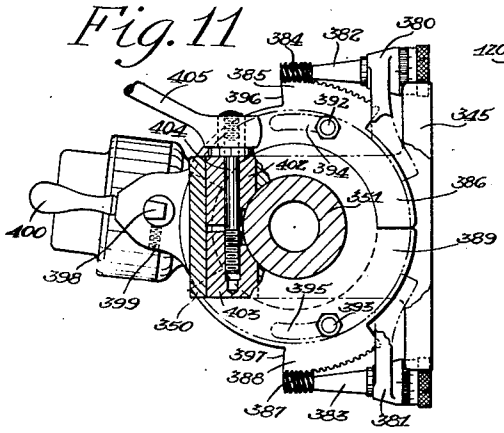

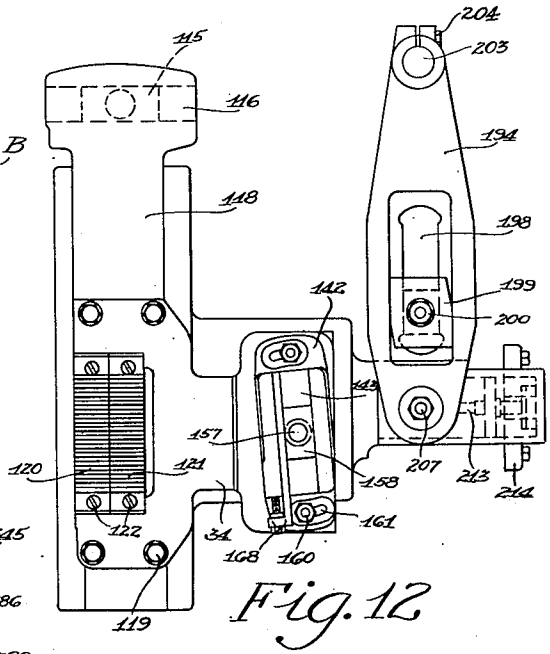

Fig. 12

INVENTORS
James E. Gleason
BY Edward W. Bullock
B. V. Schlesinger
their ATTORNEY

METHOD OF AND MACHINE FOR PRODUCING GEARS

Filed March 25, 1932 9 Sheets-Sheet 9

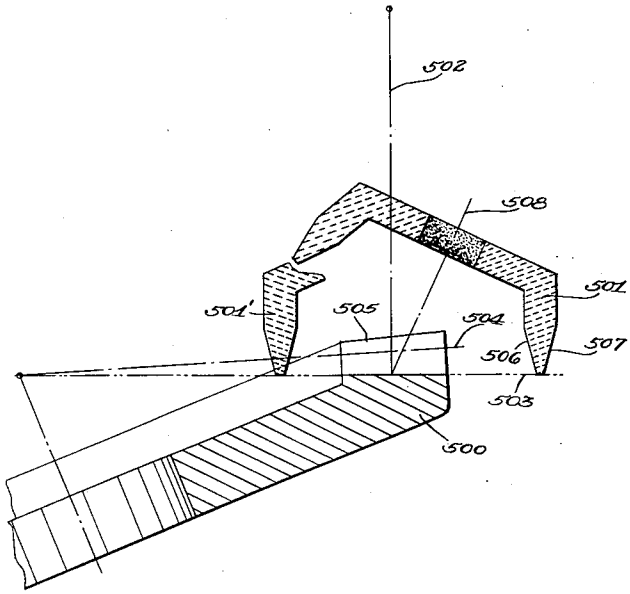

Fig. 16

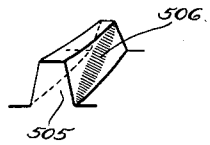

Fig. 17

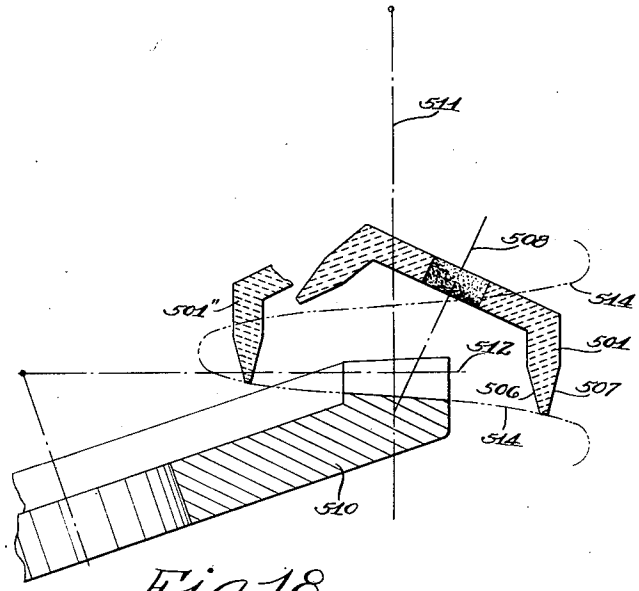

Fig. 18

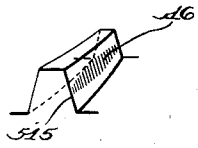

Fig. 19

INVENTORS
James E. Gleason
BY Edward W. Bullock
their ATTORNEY

Patented Nov. 27, 1934 1,982,050

UNITED STATES PATENT OFFICE

1,982,050

METHOD OF AND MACHINE FOR PRODUCING GEARS

James E. Gleason and Edward W. Bullock, Rochester, N. Y., assignors to Gleason Works, Rochester, N. Y., a corporation of New York

Application March 25, 1932, Serial No. 601,190

22 Claims. (Cl. 51—52)

The present invention relates to machines for producing gears and particularly to machines for grinding longitudinally curved tooth bevel and hypoid gears.

One object of the invention is to provide a machine, using a rotary grinding wheel of the dished type, which will be of improved construction and capable of grinding gears of a wide range of dimensions, spiral angles and lengthwise tooth curvatures.

A further object of the invention is to provide means for controlling accurately the dressing of the grinding wheel on a machine of the class referred to, to make it possible so as to dress the wheel always in the same relative position, whereby to insure that the wheel will always be dressed to the correct pressure angle.

In another aspect, it is a purpose of the present invention to construct a machine, for producing longitudinally curved tooth tapered gears with teeth tapering in depth from their outer to their inner ends, on which means is provided for automatically and mechanically eliminating the conditions which are the cause of the so-called "bias-bearing" in the usually practised method of cutting such gears.

A further object of the invention is to provide a machine for producing longitudinally curved tooth gears by the forming or non-generating process, in which the index mechanism can be operated in the correct timed relation to the feed mechanism, but in which the long and expensive gear train heretofore required between the two mechanisms is eliminated.

Other objects of the invention will appear hereinafter in the description and in the appended claims.

A preferred embodiment of the invention has been illustrated in the accompanying drawings in which:

Figure 1 is a side elevation, with parts shown in section, of a machine constructed according to the invention for grinding longitudinally curved tooth tapered gears in a forming or non-generating process;

Figure 2 is a plan view of this machine, with parts of the work head broken away for purposes of illustration;

Figure 3 is a vertical sectional view taken longitudinally through the tool end of the machine;

Figure 4 is a fragmentary elevational view, looking at the tool end of the machine and showing the dressing mechanism in position to dress the external surface of the grinding wheel, parts of the dressing mechanism being broken away to illustrate its construction;

Figure 5 is a section on the line 5—5 of Figure 3;

Figure 6 is a section on the line 6—6 of Figure 3;

Figure 7 is a fragmentary transverse vertical sectional view through the work end of the machine, showing the mounting and various adjustments of the work;

Figure 8 is a section on the line 8—8 of Figure 3, showing the means for adjusting the grinding wheel to compensate for wear and the means for moving the grinding wheel to and from dressing position;

Figure 9 is a diagrammatic view showing in perspective the principal operating parts of the machine and the mechanism for actuating the same;

Figure 10 is a view looking at the rear end of the feed cam, showing the means for tripping the index mechanism and for operating the electrical indicator that shows when the grinding wheel is in the correct position for dressing;

Figure 11 is a sectional view through the dressing mechanism, taken on the line 11—11 of Figure 4, looking in the direction of the arrows;

Figure 12 is a plan view of the cross slide and of the means for producing the oscillatory, axial and feed movements of the grinding wheel;

Figure 13 is a section on the line 13—13 of Figure 2 but on an enlarged scale;

Figures 14 and 15 are diagrammatic views illustrating how the grinding wheel may be adjusted to grind gears of different spiral angles;

Figure 16 is a diagrammatic view illustrating the method heretofore used, and specifically one grinding method heretofore used, for producing longitudinally curved tooth tapered gears having teeth tapering in depth from their outer to their inner ends;

Figure 17 is a perspective view showing a typical tooth of a gear produced according to the method illustrated in Figure 16 and the form of tooth bearing obtained with this method;

Figure 18 is a view similar to Figure 16 and illustrating the improved method of producing longitudinally curved tooth tapered gears with teeth of tapering depth according to this invention; and

Figure 19 is a view similar to Figure 17, showing the form of tooth bearing obtained on a gear produced according to the process of the present invention and on a machine such as disclosed in the drawings.

Longitudinally curved tooth bevel and hypoid gears are most usually cut with a face-mill gear cutter and are of circular arcuate lengthwise shape. While it has been proposed to grind such gears with an annular grinding wheel similar to the cutting tool, there are certain advantages to be derived from the use of a dished grinding wheel for this purpose, as disclosed in U. S. Patent No. 1,830,971 granted November 10, 1931 to Herbert Taylor. The principal advantage is that of uniformity of side clearance, for there is uniform clearance between the side of the dished wheel and the side of the gear tooth as the wheel moves across the tooth surface from one end thereof to the other. The uniformity of side clearance minimizes the possibility of burning the tooth surfaces of the gear while grinding.

There is a dished grinding wheel employed on the machine illustrated in the drawings of the present application. This wheel has, as in the machine of the Taylor patent, two motions, a rotary motion on its own axis and a swinging motion about an axis passing through the center of tooth curvature of the gear to be ground and corresponding, therefore, to the axis about which the face-mill cutter rotates in cutting the gear teeth.

While the invention in its broadcast aspects is applicable to machines for grinding either generated or non-generated gears, it has been illustrated in connection with a machine for grinding non-generated, that is, form-cut gears. On such a machine, the advantages of the dished wheel are especially valuable, for, due to their shape, a grinding wheel will have full profile contact with the gear teeth and unless it had clearance along the tooth length, burning of the tooth surfaces would most certainly occur at any appreciable feed.

For the purpose of grinding the non-generated tooth shapes, the work is held stationary during grinding in the machine illustrated in the accompanying drawings. As the rotating wheel is swung back and forth, it is fed into depth to grind the tooth surfaces from top to bottom. When a tooth surface or the two sides of a tooth space have been ground, the wheel is withdrawn from engagement with the work and the work is indexed. The feed motion is produced by a rotary cam that imparts, through a lever arm, a reciprocating motion to a carriage on which the grinding wheel is mounted. The grinding wheel is driven from one motor and the feed cam and grinding wheel oscillating mechanism are driven from another. The index mechanism is driven from still a third motor and is tripped at the correct time in the cycle from an electric switch operated by the feed cam.

Aside from any point of difference in structure due to the fact that the present machine is of the non-generating type, the machine of the present invention includes several features of improvement over the machine of the Taylor patent.

The machine of the present application is capable of more universal use. It has been provided with various adjustments which enable it to take care of a wide range of jobs. The wheel support has been made adjustable radially of the axis of swing of the wheel so that gears of different lengthwise tooth curvature, that is, gears cut with cutters of different diameters, can be ground. On the work end of the machine, in addition to the usual adjustment for cone distance and pitch cone angle, provision has been made for adjusting the work head in two different directions at right angles to one another, so that the work can be positioned relative to the wheel to permit grinding gears of different spiral angles and, in this invention, means has also been provided for adjusting the wheel support angularly about its axis of swing so that the path of oscillation of the wheel will be symmetrical longitudinally with reference to the teeth to be ground regardless of the spiral angle of the teeth.

One of the principal features of the new machine, however, is the provision made for eliminating "bias bearing". To cut or grind spiral bevel and hypoid gears with teeth of tapering depth, the usual practice is to incline the tool to the blank at such an angle that the tip of the tool travels in a plane corresponding to the root plane of the gear and inclined to the pitch and top surfaces of the gear to produce the desired lengthwise taper in depth of the gear teeth. The pressure angle of the tool is chosen with reference to the pressure angle desired to be produced on the gear measured in the pitch plane of the gear. Since the tool travels, however, in a direction inclined to the pitch plane of the tooth and inclined, also, to pitch cone elements of the blank, the pressure angle of the tooth will be different at different points along its length when referred to the pitch plane of the gear. Further, since the tools which cut a mating pair of gears must be oppositely inclined to the common pitch plane of the pair to produce the desired mating lengthwise taper in depth of the teeth on the two members of the pair, it follows that except at one point, the pressure angles of the two gears do not match along the length of mating tooth surfaces. As a consequence, when the gears are run in mesh, a tooth surface bearing or area of contact is obtained which extends diagonally across the mating tooth surfaces from one end thereof to the other. This form of tooth bearing is known as "bias bearing" and is objectionable as it is a source of wear and noise.

Various schemes have been proposed for eliminating the bias bearing condition by compensating for the effect produced in the known process when cutting teeth of tapering depth. Thus, it has been proposed to cut one member of a pair of spiral bevel gears in axially displaced position, or cut both members of a pair of spiral bevel gears conjugate to offset crown gears etc.

With the present invention, it is proposed to eliminate "bias bearing" by eliminating its cause. Thus, instead of moving the tool so that its cutting edge has a uniform inclination to the root plane of the tooth, it is proposed to position and move the tool so that its cutting edge always has the same inclination to the pitch plane of the tooth. This result is achieved by positioning the tool relative to the blank so that the pitch plane of the blank lies in the central plane of the machine and producing the desired taper in tooth depth by a relative feed movement between the tool and gear in a direction perpendicular to the pitch plane of the gear as the tool moves across the face of the gear. This relative feed movement for taper in depth is independent of the feed movement referred to above which is for the purpose of grinding the tooth to the full depth from top to bottom. As a result of the improved method of cutting, the tool will cut the same pressure angle referred to the pitch plane all along the tooth. By using matching pressure angles on the two tools, the two members of a pair can be produced with matching pressure angles along their

whole tooth lengths and, as is desirable, a tooth surface contact or bearing is obtained which extends in the direction of the pitch line. Even where only one member of the pair is produced by the method of the present invention, the mismatch of pressure angles along the mating tooth surfaces of the pair will be reduced and a better bearing condition will be obtained than under the usual production practice.

The "bias-elimination" feature of the invention has been illustrated in its application to the grinding of longitudinally curved tooth tapered gears with a dished grinding wheel, but it is equally applicable to the cutting of such gears with a swinging cutting tool. In fact, gears can even be cut with a face mill by the method of the present invention, if provision is made for reciprocating the cutting tool so that as each blade passes across the face of the blank it is moved in a direction perpendicular to the pitch surface of the blank. The invention is not restricted either to the production of longitudinally curved tooth gears, as it may be applied with equal effect and equal value to the cutting or grinding of gears having skew teeth where the tool is moved in a straight inclined path across the face of the gear blank. The tool is positioned and moved, just as in the case of the swinging or rotating tool, points in its cutting edge moving in the direction of the pitch surface of the blank, the taper in depth of the tooth being produced by moving the tool relative to the blank in a direction perpendicular to the pitch surface as the tool moves across the face of the blank.

Various mechanisms may be employed for producing the desired bias-eliminating motion. In the machine of the drawings, the grinding wheel is mounted upon an oscillatory support which carries a spur gear segment that meshes with a reciprocable rack. The rack is secured to a slide that carries an angularly adjustable guide-member which is provided with a straight slot. There is a block secured to the oscillatory support which engages in the slot of the guide-member. The guide-member is adjusted on the slide so that its slot is inclined to the path of movement of the rack in accordance with the dedendum angle of the gear to be ground. As the rack reciprocates to impart the swinging motion to the wheel, the guide-member imparts a feed movement to the oscillatory support in the direction of its axis of swing to produce the required taper in depth of the teeth. The slide is mounted upon the carriage that is actuated by the feed cam so that as the wheel swings across the face of the gear and is simultaneously moved in accordance with the lengthwise taper of the teeth, it is fed into the blank to grind the tooth surfaces to the required depth.

For dressing, the whole tool mechanism is moved clear of the work. To this end, the feed carriage is mounted on a sliding base that is movable by means of a hydraulic piston and cylinder. The dressing mechanism is mounted upon a fixed portion of the frame of the machine and the sliding base is actuated to move the grinding wheel from operative to dressing position and vice versa.

In order to dress the wheel to the correct pressure angle, it is required that it always be dressed at either limit of its depth-feed movement. To enable the operator to quickly determine when the correct position has been reached for dressing, a light bulb is mounted on the side of the machine and means is provided on the feed cam for tripping a switch to illuminate this bulb when the wheel is at the limit of its in-feed movement. When it is in this position and the sliding base has been so moved as to carry the wheel to dressing position, the operator stops the feed motor of the machine and dresses the wheel.

A diamond is employed as the dressing tool. It is mounted on a swinging arm that is oscillatable to move the diamond across the operating surfaces of the wheel. This arm is mounted upon a support that is rotatably adjustable on a bracket so that the arm can be swung through 180° to permit dressing either side of the wheel. By use of adjustable stops, the support can be set so that when the diamond is in position to dress either side of the wheel, it will dress the correct pressure angle thereon. The bracket is in turn adjustable on a supporting arm to permit adjusting the diamond in accordance with different positions of the wheel radially of its axis of swing. The supporting arm is, in turn, adjustable angularly on a column for the purpose of adjusting the diamond in accordance with the spiral angle adjustment of the wheel and the column is adjustable on the frame of the machine in accordance with the point width of the wheel. It is to be understood, of course, that instead of the dressing mechanism shown, any other dressing mechanism suitable for that purpose may be employed.

Mention has been briefly made of the principal features of the machine. Reference will now be had to the accompanying drawings for a more detailed description thereof.

20 designates the base or frame of the machine. There are ways 22 (Figs. 2 and 5) formed on the upper face of the frame 20 and extending longitudinally for slightly more than half the length thereof. Mounted to slide on the ways 22 is a sliding base 23. This base is adapted to be moved longitudinally on the frame for the purpose of adjusting the grinding wheel to compensate for wear and to move the grinding wheel from operative position to dressing position and back into operative position again. The housing or support 25 for the grinding wheel and the mechanism for actuating the same is secured to the sliding base 23 by screws 26 (Fig. 5).

There is a longitudinal slot or way 27 formed in the upper face of the sliding base 23. The carriage 28 (Figs. 3 and 5) is formed with a dove-tailed portion 29 which engages in the way 27 and slides therein. The upper face of the carriage 28 is so formed as to provide three ways 30, 31 and 32 (Figs. 3 and 9). These ways extend transversely of the carriage and extend at right angles to the way 27.

There is a cross-slide 34 mounted on the carriage 28 for movement in a direction at right angles to the direction of movement of the carriage and this cross-slide is provided with foot or guide portions 35, 36 and 37, as clearly shown in Figure 3, which engage the ways 30, 31 and 32, respectively, of the carriage 28 to guide the cross-slide in its transverse movement on the carriage. The cross-slide is held on the ways 30, 31 and 32 by gibs or straps 38, 39 and 40.

The support or housing 25 is formed with suitable bearings 42 and 43 in which is journaled the oscillatory support or cradle 45. The cradle is of enlarged diameter at its forward end and is mounted directly in the bearing 42. At its rear end, it is of reduced diameter and is mounted on anti-friction bearing 46 in the bearing portion 43 of the housing.

There is a plate 48 (Figs. 3 and 4) secured to the front end of the cradle 45 by bolts 49. This plate has two forwardly projecting arms 50. Mounted between the arms 50 is the wheel support or head 52. The arms 50 straddle this support. The support is formed with flanges 53 on its front face in which are cut the slots 54. Bolts 55 pass through these slots and engage in the arms 50 of the plate 48 to secure the wheel support adjustably upon the plate.

The grinding wheel spindle 57 is journaled in the support or head 52, being mounted therein on the anti-friction bearings 58 and 59. The grinding wheel W, which is of the dished type, is mounted upon a suitable head 60 that is secured to the sleeve 61 by the clamping-ring 62 and screws 63. The sleeve 61 is in turn secured upon the tapered nose of the spindle 57 by nut 64.

The grinding wheel is rotated continuously on its axis during the operation of the machine. The drive to the wheel is from a motor 65 (Figs. 2 and 9) that it mounted upon the sliding base 23 of the machine. The armature shaft of the motor carries a pulley 66, which is of the step-type and which drives the step-pulley 67 through the belt 68. The pulley 67 is keyed to a sleeve 69 that is journaled in anti-friction bearings 70 in a bracket 72 (Figs. 3) which is secured by screws 73 to the rear of the housing 25. The bearings 70 are held in spaced relation by spacer-sleeves 74.

75 designates a shaft that has a splined connection with the sleeve 69. This shaft is journaled on anti-friction bearings 77 and 78 in the bore of the cradle or oscillatory support 45. It is also keyed to the sleeve 79 which rotates in the bore of the cradle 45 and forms an auxiliary support for the shaft 75.

There is a bevel gear 80 keyed to the shaft 75. The bevel gear 80 meshes with and drives a bevel gear 81. This gear has a long integral sleeve which is journaled in anti-friction bearings 82 on the plate 48. The bearings 82 are spaced apart by spacer-sleeves 84 and are held in position by the nut 85 that threads on the sleeve portion of the bevel gear 81. A cover-plate 86 is secured to the plate 48 by screws 87 (Fig. 4) and serves to protect the bearings 82 against entry of dirt or grit therein.

There is a long shaft 90 telescopically mounted in the sleeve of the gear 81. This shaft is also mounted on the anti-friction bearing 91 in the wheel support 52. There is a bevel gear 93 formed integral with the shaft 90. This bevel gear meshes with and drives a bevel gear 94 which is keyed to the wheel spindle 57. Through the means described, the rotary grinding motion is imparted to the wheel W. To protect the shaft 90, telescoping guards are provided as indicated at 95 and 96. The guard 96 is secured by screws (not shown) to the wheel support 52.

For the purpose of grinding the longitudinal tooth surfaces of spiral bevel or hypoid gears, the grinding wheel has, in addition to its rotary motion, an oscillatory or swinging motion that serves to carry it across the tooth surfaces. This swinging motion is produced by oscillation of the cradle 45 and of the plate 48 which is secured thereto.

There is a motor 100 (Figs. 2 and 9) mounted on a carrier 97 secured by bolts 98 (Fig. 5) to the sliding base 23 for movement with the sliding base on the frame. The carrier is supported in its movement by the way 99 formed on the frame. The motor 100 drives the shaft 101 through the bevel gearing 102 and 103. The shaft 101 is suitably journaled in the sliding base. There is a bevel gear 104 secured to this shaft that meshes with a bevel gear 105 on a transverse shaft 106 that is also suitably journaled in the carrier 97. There is a spur gear 107 fastened to the shaft 106 that meshes with a spur gear 108 that is secured to the shaft 110. There is a bevel pinion 111 secured to the inner end of the shaft 110. This pinion meshes with and drives a bevel gear 112. The bevel gear 112 is secured to the lower end of a short shaft which is journaled in the carrier 97 and to the upper end of which is secured the crank member 114 (Figs. 2 and 9). The crank member carries a block 115 that engages in the slot 116 formed in the lower-face of an arm 118 that is secured to the cross-slide 34 by screws 119 and extends from one side thereof.

There are a pair of identical racks 120 and 121 secured by screws 122 to the upper face of the arm 118 within a slot in the slide 34 (Figs. 3, 6, 9 and 12). These racks mesh with an elongated spur gear segment 124 which is secured by the screws 125 and key 126 to a sleeve 128. The racks are adjustable longitudinally relative to one another by interposition of shims between an end of one rack and the adjacent end-wall of the slot in the slide 34 within which the racks are mounted. Thus backlash between the racks and the segment 124 can be taken up. The sleeve 128 is rotatably adjustable with reference to the cradle or oscillatory support 45, but is adapted to be clamped to the cradle so that oscillation of the sleeve is imparted directly to the cradle. Adjustment of the sleeve on the cradle is effected by rotation of a worm 130 (Figs. 3, 14 and 15) which is secured to a shaft 132 that is journaled in the sleeve member 128. The worm meshes with the worm wheel 133 that is keyed to the cradle 45. The sleeve member 128 is clamped to the cradle 45, after relative adjustment of the two members, by the clamping blocks 135 (Fig. 6) which slide in a cylindrical bore that extends through the sleeve-member 128 transversely of the cradle. The blocks 135 are formed on their lower faces with arcuate gripping surfaces that conform in curvature to the curvature of the external surface of the cradle 45. The blocks are manipulated in their bore by rotation of the nut 136 which threads onto the bolt 137. The head of the bolt seats in a recess formed in one of the block members and its stem extends through the two block members. When the nut 136 is threaded up, the sleeve member 128 is clamped securely to the cradle 45 and any motion of the sleeve member is imparted to the cradle. An arm may be provided on the nut 136, as shown, to permit its ready movement by the operator. The worm shaft 132 can be rotated by any suitable tool.

To allow of access to the worm shaft 132 and the nut 136, the housing 25 is formed with an opening 138. A removable cover plate 139 (Fig. 3), that is adapted to be secured to the housing by screws 140, is provided to cover this opening when the machine is in use.

Through the mechanism just described, it will be seen that the required oscillatory motion is imparted to the grinding wheel. As already stated, one of the principal features of this machine is the provision of means for eliminating conditions which, unless corrected, cause "bias-bearing" in longitudinally curved tooth tapered gears which have teeth of longitudinally tapering depth. This mechanism will now be described.

142 designates a bar that is mounted on the

cross-slide 34 for angular adjustment thereon. This bar is provided with a slot 143 (Figs. 3, 9 and 12).

There is an approximately cylindrical member 145 (Figs. 3 and 5) mounted on anti-friction bearings 146 on a sleeve 147. The sleeve 147 surrounds the shaft 75 and is secured to the rear end of the cradle 45 by screws 148. The inner races of the bearings 146 are secured against the shoulder formed on this sleeve, being held in position by the ring 149 and nuts 150, the latter being threaded on the sleeve 147. The outer races of the bearing 146 are held against a shoulder formed on the sleeve member 145, being held in position by the nut 152. The construction is such that when the sleeve-member 145 is moved axially of the shaft 75, this axial movement is imparted through the sleeve 147 to the cradle 45.

There is a plate 155 secured by screws 156 to the lower face of the member 145 (Figs. 3 and 5). There is a pin 157 formed integral with the plate 155. This pin engages in a block 158 that is adapted to slide in the slot 143 of the bar 142. The bar 142 is provided with an integral cylindrical boss or stud 159 that engages in a correspondingly shaped recess in the cross-slide 34 and serves as a pivot-center for angular adjustment of the bar on the cross-slide. The bar 142 is secured in adjusted position by bolts 160 that pass through arcuate slots 161 formed in the bar and that spread into the cross-slide 34. The slots 161 are curved about the center of pivotal adjustment of the bar.

When the bar 142 is adjusted so that its slot 143 extends at an acute angle to the shaft 75, axial reciprocatory movement will be imparted to the sleeve-member 145 on reciprocation of the cross-slide 34. Through the sleeve-member 145 this axial movement will be imparted to the cradle 45, thereby moving the grinding wheel in the direction of its axis of swing as it swings across the face of the gear surface being ground. Thus the movement of the cross-slide 34 not only produces the swinging motion of the wheel, but imparts to it, also, a motion in the direction of its axis of swing, the latter motion being produced by operation of the bar 142 and block 158.

The sleeve member 145 is held against rotation during its reciprocation by a block 162 that is secured to the housing 25 by the screw 162' and that engages in a longitudinal slot or groove 163 formed in one side of the member 145.

To eliminate the effect of backlash or wear between the pin 157, block 158 and bar 142, there are a plurality of spring-pressed plungers mounted in the cylindrical member 145. These are designated at 164 (Figs. 3 and 5). Springs 165 are mounted upon the stems of the plungers and interposed between the heads thereof and a ring member 166 that is secured by screws (not shown) to the cylindrical member 145. The springs 165 hold the heads of the plunger 164 in engagement with a ring 167 that is secured by screws (not shown) to the bearing 43 of the housing 25. These plungers also serve to take up wear between the feed cam and its roller as will hereinafter appear. Wear of the block 158 (Fig. 12) is taken up by the taper gib 168.

For the purposes of greater rigidity and accuracy, an outboard support is provided for the plate 48, which, as described, oscillates with the cradle 45. This outboard support is in the form of an arm 170 (Figs. 3 and 4) which is secured to the housing 25 by a screw 171. The plate 48, which surrounds the bevel gears 80 and 81 and the shaft 90, is formed with an integral forwardly projecting stud-portion 173. This stud-portion is journaled on the anti-friction bearing 174 and is so mounted in the arm 170. Thus, an outboard support is afforded for the cradle and the weight of the cradle and of the parts mounted thereon is more evenly carried by the housing 25. The inner race of the anti-friction bearing 174 is held in position by the disc 175 which is secured to the stud portion 173 by the screw 176. A cover 177 is provided to protect the bearing 174 against entry of dirt or grit therein. This cover is secured in position by screws (not shown) which thread into the arm 170.

The bar 142 simply controls the movement of the grinding wheel as it takes each stroke across a tooth surface being ground. To grind this tooth surface for its full depth, that is, from top to bottom, a depth feed motion is required. This depthwise feed and the alternate movement of withdrawal required in order that the wheel may clear the gear, after a tooth surface has been ground to permit indexing of the gear, are effected by movement of the carriage 28. The mechanism for producing the required reciprocatory movements of the carriage will now be described.

There is a bevel pinion 180 secured to the shaft 101 (Figs. 2 and 9). This pinion meshes with and drives a bevel gear 181 which is fastened to a shaft 182 that is mounted in the carrier 97. There is a spur gear 184 secured to the shaft 182. This spur gear meshes with a spur gear 185 which is fastened to the shaft 186. The shaft 186 is suitably journaled in a carrier 97. It has a bevel pinion 187 secured to its inner end which meshes with and drives the bevel gear 188 that is secured in any suitable manner to the feed cam 190. The feed cam is secured to a shaft 192 (Fig. 5) that is suitably journaled in the carrier 97.

The rotary feed-cam 190 transmits motion to the carriage 28 through a lever-arm 194 (Figs. 5 and 9). This lever-arm swings on an adjustable fulcrum-block 195 that is adjustable in a slot 196 formed in the upper face of the sliding base 23. There is a sleeve 197 mounted on the fulcrum-block 195 that engages in a slot 198 formed in the lever arm 194. A rectangular plate 199 is secured to the upper end of the block 195 by a screw 200. This plate 199 engages in a slot 201 formed in the lever arm 194 and communicating with the slot 198 therein and serves to guide the block 195 in its adjustment relative to the lever 194. One end of the arm 194 is split as shown in Figure 12 and there is a roller 203 secured by the bolt 204 in this end of the lever arm. This roller engages in the trackway 205 of the feed-cam 190. At its other end, the lever 194 is pivotally secured to the stud 207. The connection is through a bushing 208 (Figs. 5 and 3) that is mounted upon a sleeve 209 which is mounted on the stud 207.

The stud 207 has a T-shaped head 210 which engages in a T-slot 211 formed in the carriage 28. The stud 207 is adjustable with reference to the carriage 28 by rotation of the screw-shaft 213 which threads into the head of the stud 207. This screw shaft is journaled in a plate 214 that is secured in any suitable manner to the carriage 28. The stud 207 is secured in any adjusted position by threading up on the nut 215. A washer 216 is interposed between the nut and the flange of the bushing 208.

In each revolution of the cam 190, a feed movement will be imparted to the grinding wheel to grind the tooth surface to the required depth

and the wheel will then be withdrawn from the work to permit of indexing the work. The throw of the lever-arm 194 can be adjusted by adjustment of the stud 207 and fulcrum-block 195 so as to secure different amounts of feed as required for different jobs. The means for moving the sliding base 23 to carry the grinding wheel from operative to dressing position and back into operative position again will be described hereinafter.

The gear to be ground is secured to the work spindle 220 (Figs. 2 and 9). Any suitable chucking mechanism may be used for this purpose. As illustrated in the drawings, the gear G to be ground is secured to the arbor 221 by a clamping disc 222 and a draw-bar 223, the head of the draw-bar engaging the clamping disc to hold the gear against the arbor 221 and the ejector plate 224. The chucking mechanism may be actuated into chucking position and released in any suitable manner. In the drawings, we have indicated that the chucking mechanism may be controlled through hydraulic pressure. Thus, a piston might be secured to the draw-bar 223 and the draw-bar moved into chucking position by a spring and released by hydraulic pressure. As the chucking mechanism forms no part of the present invention and as such chucking mechanisms are old, the chucking mechanism will not be described further, other than to say that the hose 225 indicates a hose for conducting the pressure fluid to the chucking mechanism and that the chucking mechanism may be controlled by a manually operable valve 226 (Fig. 1).

The work spindle 220 is journaled in the work head 230, being journaled in spaced front and rear bearings formed on this work head as clearly shown in Figure 2. The work head 230 is vertically adjustable upon a column 232, the column being formed with ways 234 and 235 which are engaged by suitable guide portions that are formed on the work head. The vertical adjustment of the work head is effected by rotation of a screw shaft 236 which threads in a plate 237 that is secured to the column 232 and which is secured to a lug 239 (Figs. 2 and 7) that is formed integral with the work head. The work head is secured in any position of its vertical adjustment on the column 232 by the gib or strap 240 (Fig. 2) and by the bolts 241 (Fig. 7). The bolts 241 pass through an elongated slot 242 in a brace 243 and through a clamping block 244, threading into the work head 230. The spacer-block 244 is formed with a semi-cylindrical recess on its inner face conforming in shape to the peripheral surface of the work spindle. The brace member 243 is secured by bolts 246 to the column 232.

The column 232 is mounted on a plate 248 and is adjustable thereon in a direction parallel to the axis of the work spindle. This adjustment is effected by rotation of a shaft 249 that is journaled in the column 232 and which carries a pinion 250 that meshes with a rack 251 which is secured in any suitable manner to the carrier 248. The column 232 is secured in any adjusted position on the carrier 248 by the T-bolts 253 whose heads engage in T-slots 254 formed in the carrier 248 and extending parallel to the axis of the work spindle.

The carrier 248 is adjustable angularly upon a slide 256, the adjustments being effected by simply moving manually the carrier 248 and the parts supported thereon on the slide. The carrier is secured in any position of its angular adjustment by T-bolts 257, the heads of which engage in the arcuate T-slots 258 formed in the upper face of the slide 256.

The slide 256 is adjustable on the frame 20 of the machine in a transverse direction, that is, in a direction at right angles to the direction of movement of the sliding base 23. The adjustment of the slide 256 is effected by rotation of a handwheel 260 that is secured to a screw shaft 261. The screw shaft is journaled in a bracket 262 that is secured to the frame 20. This shaft threads into a nut 263 which is secured by screws 264 to the upper-face of the slide 256. The slide is secured in any position of its adjustment by the T-bolts 265 whose heads engage in a transverse T-slot 266 formed in the upper face of the frame.

The machine illustrated is for the purpose of grinding formed or non-generated gears. The work is, therefore, stationary during grinding and the work spindle is only rotated for indexing. The indexing mechanism will now be described.

Mounted on a bracket 270, that is secured to the work head 230, is a motor 272 (Figs. 1, 2 and 9). There is a worm 273 connected to the armature shaft of this motor (Figs. 2, 9 and 13). This worm meshes with a worm wheel 274 that is mounted upon a shaft 275, which is suitably journaled in a bracket 276 secured to and projecting at one side from the work head 230. There is a ratchet wheel 278 secured to the upper end of the shaft 275. There is a shaft 279 journaled in the bracket 276 and mounted in alignment with the shaft 275. There is a stop-plate 280 keyed to the shaft 279. This stop-plate is provided with a circumferential groove 281 within which is pivoted a pawl 282 and which is adapted to engage the ratchet wheel 278 to effect indexing.

The pawl 282 is urged into engagement with the ratchet wheel 278 by a spring-pressed plunger 284. The pawl is held out of engagement with the ratchet wheel, however, during grinding, by a dog 285, which is pivotally mounted at one end in the bracket 276 and which is pivoted at its other end to the core-bar 286 of a solenoid 287. The dog 285 is provided with a ledge portion that engages a tail-piece formed on the pawl 282 as clearly shown in Figures 2 and 9 and when the dog is so engaged with the pawl, the pawl is held out of engagement with the ratchet wheel. The shaft 279 carries at its upper end a spur gear 290. This spur gear forms one of a set of index change gears of which the other members are designated, respectively, at 291, 292 and 293. The gear 293 is rotatable on the index worm shaft 294 but can be clutched thereto by the clutch 297. The change gears serve to transmit rotation from the shaft 279 to the shaft 294. The index worm shaft 294 carries the index worm 295 which meshes with and drives the index worm wheel 296 that is keyed to the work spindle 220.

The locking dog 285 is tripped out of engagement with the pawl 282 to release the same by energizing the solenoid 287. The solenoid is controlled by a normally open electric switch 300 that is operated by the rotary feed-cam 190. The switch 300 is mounted on a casing 301 (Fig. 10) which is secured to the frame 20 of the machine and projects inwardly from the end wall thereof adjacent the end of the cam 190. The cam 190 is formed with a cam-track 302 on its rear end face. Journaled in any suitable manner in the frame of the machine is a rock-shaft 304. There is an arm 305 secured to the rock-shaft 304. This arm carries a roller 306 that engages in the cam-track 302. There is an arm 308 also secured to

the rock-shaft 304, this arm having a split-clamp connection with the rock-shaft. The free end of the arm 308 is of dove-tail shape.

During feed of the grinding wheel, the roller 306 moves in the portion A of the cam-track 302, but as soon as the wheel has cleared the gear on withdrawal, the roller enters the portion B of the cam-track 302. This causes the rock-shaft 304 to be rocked about its axis and the side 309 of the free end of the arm 308 depresses, by its contact with the roller 310, the switch arm 311 against the resistance of the spring 312. Thus a circuit is closed from the main lines 314 and 315 (Fig. 9) through the lines 316 and 317 and the switch 300, energizing the electro-magnet 287. The core-bar 286 is drawn inwardly, disengaging the dog 285 from the pawl 282. The pawl 282 instantly drops into engagement with the ratchet wheel 278 under actuation of the spring plunger 282. The rotation of the ratchet wheel, which is driven continuously from the motor 272, is, therefore, transmitted to the stop plate 280 and through the shaft 279, change gears 290, 291, 292 and 293, shaft 294, worm 295 and worm wheel 296 to the work spindle 220 indexing the work. The portion B of the cam track 302 is of sufficient angular extent to permit of the required angular rotation of the work spindle to effect indexing before the pawl 282 is again disengaged. When the roller 306 again enters the portion A of the cam-track 302, the switch arm 311 is released and the solenoid 287 is de-energized. The dog 285, then, returns to operative position under actuation of a spring-pressed plunger 320. The tail of the pawl 282 is again engaged by the dog 285 and thus the continuously rotating shaft 275 is disconnected from the shaft 279. The indexing operation has been completed.

We have shown in the drawings one form of dressing mechanism, which may be employed on a machine constructed according to the present invention for the purpose of dressing the grinding wheel. It is to be understood, however, that we do not wish to be restricted to the use of a dressing mechanism such as shown for any suitable type of dressing mechanism may be used instead. There is an auxiliary base or extension 322 (Figs. 2 and 4) provided at one side of the frame 20. Mounted on this extension for adjustment thereon in a direction parallel to the direction of movement of the supporting base 23, is an upright or column 324. The column is guided in its adjustment by a tongue 325, which is secured to the column by screws 326 and which engages in a groove 327 formed in the upper face of the extension 322. Adjustment of the column 324 on the extension 322 is effected by rotation of a screw-shaft which is journaled in the extension and which threads into the tongue 325. As such construction is obvious and forms no part of the present invention, it has not been illustrated further than to indicate the position of the screw-shaft. This is shown in section at 328 in Figure 4. The column is secured in any adjusted position on the extension 322 by T-bolts 329, the heads of which engage in T-slots 330 formed in the upper face of the extension 322 and extending longitudinally of the extension in the direction of movement of the sliding base 23.

There is a spur gear segment 332 secured to the column 324 by screws 333. This segment is preferably made so that when secured in position, it will be coaxial with the shaft 75 about which the grinding wheel swings and has its angular adjustment. There is an arm or plate 335 mounted on the column 324 and angularly adjustable thereon about the axis of the shaft 75. Adjustment of the arm or plate 335 on the column 324 is effected by rotation of a shaft 336 which is journaled in the plate. This shaft carries a worm 337 that meshes with a worm wheel 338 which is secured to a shaft 339 that is journaled in the plate. The shaft 339 carries a spur pinion 340 which meshes with the spur gear segment 332. The plate 335 is held in any adjusted position by gibs or straps, one of which is shown at 342 in Figure 1. These engage behind the spur gear segment 332 at either side thereof and are held in position by bolts 343.

345 designates a bracket which is adjustably mounted upon the plate 335. Adjustment of the bracket upon the plate is effected by rotation of the screw-shaft 346 which is journaled in the plate 335 and which threads into the bracket 345. The bracket is secured in any position of its adjustment on the plate by the T-bolts 347, whose heads engage in T-slots 348 formed in the face of the plate 335. The bracket 345 is provided with a projection or arm 350 (Figs. 4 and 11) which forms a bearing for the tubular portion 351 of a headed supporting member or carrier 352.

Journaled in anti-friction bearings 354 and 355 in the head of the supporting member 352 is a stud or shaft 356. There is a swinging arm 357 keyed to the shaft 356. The dressing tool 358, which is here shown as a diamond, is secured in a suitable holder 359 that is mounted on the free end of the arm 357. The diamond holder 359 is secured to the arm 357 by screws 360.

To dress the grinding wheel, the arm 357 is swung back and forth about the axis of the shaft 356 to move the diamond across an operating surface of the wheel. To swing the arm 357, the operator rocks the hand-lever 362 (Figs. 2 and 4). This lever is pivotally mounted at 363 upon an arm 364 that extends from the rotatable supporting head 352. An extensible linkage 365 connects the lever 362 with a pin 366 that is pressed into a hole drilled in the arm 357. As an aid toward securing a uniform dressing movement, a constant friction load is applied to the shaft 356. For this purpose a disc 370 is slidably keyed to the shaft 356. This disc is adapted to be forced into engagement with a friction disc 371 by a coil-spring 372 that surrounds the shaft 356. The friction disc 371 is secured by screws 373 to a disc 374 which, in turn, is secured by screws 375 to the supporting member 352. The tension of the spring 372 is controlled by adjustment of the nut 376 which threads on the shaft 356. Thus, the amount of friction load on the shaft 356 can be adjusted. A cap 377 covers one end of the shaft 356 and a plate 378 covers the other end thereof. The plate is secured in position by screws 379, while the cap may be secured in position in any suitable manner.

With the dressing mechanism illustrated, a single diamond can be used to dress both the inside and outside operating surfaces of the grinding wheel. It is for this reason, that the support 352 is mounted so as to be rotatable in the bearing portion 350 of the bracket 345. Provision is made for controlling the pressure angles to be dressed on opposite sides of the grinding wheel. Journaled in lugs 380 and 381, which are formed integral with the bearing portion 350 of the bracket 345, are worm shafts 382 and 383, respectively (Figs. 4 and 11). The shaft 382 carries a worm

384 that meshes with the teeth of a worm wheel segment 385 formed on the periphery of an arcuate plate 386. There is a worm 387 on the shaft 383 which engages with the teeth of a worm wheel segment 388 that is formed on the periphery of an arcuate plate 389. The two plates 386 and 389 overlap as clearly shown in Figure 4 and are mounted to adjust on the collar portion 390 of the supporting head 352.

The plates 386 and 389 are secured in adjusted position by bolts 392 and 393, respectively, which pass through arcuate slots 394 and 395, respectively, in the bearing portion 350 of the bracket 345, and which thread into the plates 386 and 389, respectively. The end faces 396 and 397 of the toothed portions 385 and 388, respectively, of the plates 386 and 389, respectively, form shoulders or stops. These shoulders or stops are adapted to engage the lug 398 that is secured by a set-screw 399 in a projection of the head 352. Thus by adjustment of the plates 386 and 389, the limits of angular adjustment of the supporting head 352 in either direction are determined. In this way, the angular setting of the diamond for dressing either side of the wheel W can be determined so as to control the pressure angles to be dressed on the inside and outside surfaces of the wheel. Through suitable adjustment of the plates 386 and 389, the two sides of the wheel may be dressed to the same or to different pressure angles. The knurled heads of the worm shafts 382 and 383 are suitably graduated to permit setting the plates 386 and 389 accurately for the pressure angle or angles desired.

To swing the diamond from operative relation with one side of the wheel into operative relation with the other side thereof, the operator grasps the handle 400. This handle is secured in the head 352. After adjustment to either limit of its angular movement, the head 352 is adapted to be clamped in adjusted position. For this purpose, the clamping blocks 402 and 403 are provided. These slide in a bore of the bearing portion 350 of the bracket 345 and they have arcuate gripping surfaces that are adapted to engage the periphery of the tubular portion 351 of the head 352. The blocks 402 and 403 are drawn into clamping engagement with the tubular portion 351 by rotation of the screw shaft 404. This shaft passes through the block 402 and threads into the block 403. It is rotated by the hand-lever 405.

The head 352 is held against axial movement in the bearing 350 by the nut 407 that threads on the tubular portion 351 of the head.

To lock the arm 357 out of the way when grinding, the spring-pressed plunger 409 is provided. This plunger is mounted to slide in the discs 410 and 411 that are pressed into the bore of the tubular portion 351 of the head 352. The plunger is adapted to enter a recess 412 in the arm 357 to lock the arm in inoperative position. It is held in locking position by the coil-spring 413. The operator can retract it from locking position by grasping the knob 414 and pulling the plunger outwardly.

To dress the grinding wheel, it is moved entirely clear of the work. For this purpose, the whole tool mechanism is withdrawn from operative position by movement of the sliding base 23. Mounted on the frame of the machine is a cylinder 420 (Figs. 1, 3 and 8). There is a piston 422 reciprocable in this cylinder. The piston is secured by nuts 423 to a connecting rod 424. The piston rod extends through the inner end wall of the cylinder, which is in the form of a stuffing box 425. Externally of the cylinder, the piston rod is threaded, as indicated at 426. The threaded portion of the rod threads into a bracket 427 that is secured by bolts 428 to the under-face of the sliding base 23. Thus on application of fluid pressure to opposite ends of the piston 422, the sliding base 23 may be moved on the frame 20.

The pressure fluid is supplied to the cylinder 420 from the pump 430 (Fig. 1) that is mounted on the frame of the machine and pumps oil from the sump 431 through the pipe 432. The pump is driven by the motor 433 (Fig. 2) and is connected by the piping 434 with a three-way valve 435 which may be of any suitable construction. The pipe 434 is also connected by the pipe 436 with the three-way valve 226 already referred to and which controls the work chucking mechanism of the machine. The exhaust ports of the two valves 226 and 435 are connected by a pipe 437 and a pipe 438 leads from the valve 435 back to the sump. Piping 440 and 441 lead from the valve 435.

The line 440 is divided adjacent the cylinder 420 so as to connect with the cylinder 420 at two spaced points. Thus the piping 440 communicates with the cylinder 420 through an elbow 442 and the port 443. The piping 440 also communicates with the cylinder 420 through an elbow 444, the duct 445 and the port 446.

The piping 441 also divides adjacent the cylinder 420 so as to communicate with the cylinder at two spaced points. Thus, the piping 441 communicates with the cylinder 420 through the elbow 447 and port 448. It also communicates with the cylinder 420 through the elbow 449, duct 450 and port 451.

By rotation of the valve 435, the piston 422 can be moved in either direction to move the sliding base 23 accordingly. The movement of the piston is cushioned toward the end of its stroke in both directions because the ports 443 and 448 are shut off just before the piston reaches the limit of its movement, so that the piston travels the remainder of the distance to its limit position at a rate determined by reduced rate of flow of the exhaust fluid through the port 446 or the port 451, as the case may be.

As the grinding wheel is dressed back, it must be advanced to compensate for its wear. For this purpose, the sliding base 23 is adjusted relative to the piston rod 424.

During operative use, the piston rod 424 is clamped against movement relative to the sliding base. For this purpose, the split-nut 454 is provided. This nut is mounted in a recess formed in the bracket 427. The two portions of the nut 454 are forced together to grip the threaded portion 426 of the piston rod and are held in gripping position by a cam-member 455 (Fig. 8) which has teeth on its end face adapted to engage oppositely cammed teeth formed on the opposing end face of one-half of the split-nut 454.

The cam member 455 is rotatably mounted upon the stud 456 that is journaled in the two halves of the split-nut 454 and projects therefrom. There is a bevel gear segment 458 keyed to the cam member 455. Journaled in the bracket 427 is a shaft 460 to which is keyed a bevel pinion 461 that meshes with the bevel gear segment 458. The shaft 460 telescopes into the shaft 462 and has a splined connection therewith. The shaft 462 is journaled in the bracket 432. There is a bevel gear 463 secured to the shaft 462. A bevel gear 464 meshes with the

bevel gear 463. The bevel gear 464 has a long shank which is connected by the sleeve 465 with the shaft 466. The shaft 466 is journaled in the bracket 467 that is secured to the frame of the machine. There is an operating handle 468 secured to the outer end of the shaft 466. By rotating this handle, the cam-member 455 can be rotated to force the parts of the split-nut 454 into clamping position or to release the same. There is a spring-pressed plunger 469 mounted in the handle of the operating lever 468. This is adapted to be engaged in one of two holes 470 in the bracket 467 (Fig. 1) to lock the cam member 455 either in its operative or released position.

When the parts of the split-nut 454 are released by rotation in the correct direction of the operating hand-lever 468, the piston rod 424 can be rotated to adjust the sliding base 23 along the piston rod and thereby compensate for wear of the grinding wheel. To effect this adjustment, there is a handwheel 470 provided. This handwheel is fastened to a shaft 472 that is journaled in the bracket 467 in parallelism with the shaft 466. The shaft 472 is connected by the sleeve 473 with an aligned shaft 474 to which is secured the bevel pinion 475. This pinion meshes with a bevel gear 476 which is keyed to a shaft 477 that is journaled in the bracket 432. The piston rod 424 is splined beyond the threaded portion 426 as indicated at 478 and the splined portion 478 of the piston rod telescopes into the shaft 477.

To insure dressing the operating surfaces of the grinding wheel to the correct pressure angles, it is desirable to dress the wheel when the carriage 28 is at one limit or the other of its movement on the sliding base 23. Thus the grinding wheels may be dressed at a position equivalent to its full depth position or at a position equivalent to that it occupies when withdrawn to permit indexing. To aid the operator in determining when the carriage 28 is in the limit position in which it is desired to dress, an electrical signal is provided. This is in the form of a light bulb that is mounted in a suitable position on the machine to be readily observed by the operator. The panel behind which the bulb is mounted is designated at 480 (Fig. 1). The glass 481 in this panel may be clear or colored as desirable. There is a switch 483 (Fig. 10) mounted on the casing 301. This switch controls the illumination of the signal light. It is a normally open switch. When the roller 306 enters the portion A of the cam-track 302, which may be the case, for instance, when the carriage 28 is in full-depth position, the side surface 485 of the free end of the arm 308 engages the roller 486 on the arm 487 of the switch 483 to close the switch against the resistance of the spring 489. This closes a circuit to the signal light bulb, the current flowing from the main lines 314 and 315 through the lines 490 and 491 and the switch 483. The operator can readily tell, then, when the wheel is in proper position for dressing.

The purpose of the bias-eliminating feature of the invention is clearly shown by comparison of Figure 16, which illustrates the known method of cutting or grinding curved tooth tapered gears so as to produce teeth of lengthwise tapering depth, with Figure 18, which illustrates the improved method of grinding or cutting such gears by the present invention. In both figures, the tool shown is a dished grinding wheel, but, as stated above, the invention is not limited to the use of such a tool.

In the known method (Fig. 16), the gear 500 to be ground and the grinding wheel 501 would be so adjusted angularly relative to one another that the axis 502 about which the grinding wheel is to swing is perpendicular to the root plane 503 of the gear. The axis 502 corresponds to the axis of the shaft 75 of the machine shown. It is inclined to the pitch plane 504 of the gear at an angle equal to the dedendum angle of the gear teeth 505. The grinding wheel 501 is, of course, tiltably adjusted relative to its axis of swing 502 so that the profiles 506 and 507 of the operating surfaces of the wheel are inclined in accordance with the pressure angles desired to be produced on the tooth surfaces of the gear. The pressure angles are measured at the pitch line because this is the line along which the gear and its mate have rolling contact.

To grind the tooth surfaces of the gear, the wheel 501 is rotated on its axis 508 and is simultaneously swung about the axis 502. Unless a generating motion is employed, the only other relative movement between the wheel and blank is the movement of feed required to cause the wheel to grind the tooth surfaces from top to bottom. 501 indicates the position of the wheel at the start of its swing and 501′ shows the position of the wheel, fragmentarily, at the end of its swing. Both positions are with the wheel in full depth position. Since the wheel is swung in an inclined (curved) path across the face of the gear, it follows that the wheel will only produce the desired pressure angle measured at the pitch surface on the gear at one point as, for instance, at the center of the face of the gear. Elsewhere the pressure angles of the gear tooth surfaces measured at the pitch line will be slightly different from the desired pressure angle. When the mating gear is ground the axis of swing of the grinding wheel used is also adjusted perpendicular to the root line of this gear and thus inclined to the pitch line by the dedendum angle of this gear. Thus the axes of swing of the two wheels when grinding the two gears are inclined to one another by the sum of the dedendum angles of the two gears. Hence the pressure angles of the mating tooth surfaces of the two gears will differ along their length, the amount of mismatch being determined by the sum of the two dedendum angles.

The result of the prior method is that when the pair of gears are run in mesh, mating tooth surfaces will have a bearing or contact area extending diagonally across the tooth surfaces, as shown in Figure 17, 505 being one of the teeth of the gear 500 and the shaded area 506 indicating the bearing or contact area between one side face of this tooth and the mating tooth surface of the mate gear, when the two gears are run in mesh.

With the improved method of the present invention (Fig. 18), the gear 510 to be ground and the grinding wheel 501 are so adjusted angularly relative to one another, that the axis 511 about which the grinding wheel is to swing is perpendicular to the pitch line 512 of the gear teeth. This axis 511 corresponds to the axis of the shaft 75 of the machine. As before, the axis 508 of the grinding wheel is inclined to the axis 511 of swing so that the operating surfaces 506 and 507 of the wheel are inclined at the correct angles to produce tooth surfaces of the desired pressure angle on the gear. To grind the tooth surfaces

of the gear, the wheel is rotated on its axis 508 and simultaneously swung about the axis 511. In addition, as the wheel swings across the face of the blank, it is moved in the direction of the axis 511. This last movement is either a movement of advance or withdrawal along the axis 511 depending upon whether the wheel is swinging from the inside end of the tooth outwardly or from the outside end of the tooth inwardly. This movement is in addition to the feed required to advance the grinding wheel into full depth position and would, of course, be in addition to the generating motion if one is employed. The simultaneous swing of the grinding wheel about the axis 511 and advance or withdrawal in the direction of this axis causes the grinding wheel to follow a helical path as it moves across the face of the gear, the tip surface of the wheel tracing, for instance, a helical path such as indicated at 514. The position of the wheel at the start of a swing from the outside inwardly is indicated at 501 while the position of the wheel at the inside limit of swing is indicated at 501''. The movement of the wheel in the direction of the axis 511 as it swings across the face of the gear produces the desired lengthwise taper in depth of the gear teeth while maintaining uniform inclinations between the active surfaces 506 and 507 of the wheel and the pitch surface 512 of the gear. Thus tooth surfaces will be ground upon the gears of uniform pressure angle along their whole length measured at the pitch line.

When a pair of gears cut or ground according to this invention are run in mesh, therefore, the tooth bearing or contact will extend in the direction of the pitch surface, as shown in Figure 19 where 515 designates a tooth of the gear 510 and the shaded area 516 indicates the kind of tooth bearing obtained on one side of the tooth when this gear is run in mesh with a mate gear ground according to the method of this invention. If only one of the pair is ground according to the method of this invention, the amount of bias will be reduced as compared with that shown in Figure 17.

While the use and operation of the machine may be understood from the preceding description, it will be briefly summed up here.

The work is adjusted into the correct operative position by adjustment of the work head 230 on the column 232, adjustment of the column 232 on the plate 248, adjustment of the plate 248 on the slide 256 and adjustment of the slide 256 on the frame 20 of the machine. The vertical adjustment of the head 230 on the column 232 and the horizontal adjustment of the slide 256 on the frame are for the purpose of offsetting the axis of the gear from the axis of the shaft 75 so as to position the gear relative to the path of swing of the grinding wheel in accordance with the spiral angle of the gear teeth to be ground. The adjustment of the column 232 on the carrier 248 is for the cone distance setting of the work and the angular adjustment of the carrier 248 on the slide 256 is to adjust the work so that in full depth position its pitch plane will coincide with the central transverse plane of the machine.

The grinding wheel support 52 is adjusted angularly about the axis of the shaft 75 in accordance with the spiral angle of the gear to be ground. This adjustment is effected by releasing the clamping blocks 135 (Figure 6) and rotating the worm 130 to adjust the cradle 45 angularly relative to the sleeve 128. In Figures 14 and 15, there are shown two different positions of angular adjustment of the grinding wheel support 52 about the shaft 75 as required to grind two different gears 520 and 521, respectively, having teeth 522 and 523, respectively, whose spiral angles are different.

The angular adjustment of the grinding wheel support makes it possible to position the arc of swing of the grinding wheel so that it will be symmetrical with reference to the center of the tooth surface to be ground and so that a constant arc of swing can be used for all jobs of the same face-width. The adjustment of the support 52 on the arms 50 of the plate 48 allows of grinding gears having teeth of different lengthwise curvature. This adjustment permits positioning the wheel so as to swing at different radial distances from the axis of the shaft 75.

In Figures 14 and 15, positions of the grinding wheel have been indicated by sections through the wheel taken in the pitch plane. As described in the Taylor patent above mentioned, the dished wheel is of crescent shape in this plane. Different positions of the wheel are indicated at 525 and 525' in Figure 14 and at 526 and 526' in Figure 15, the arcs of swing of the wheel being indicated in dotted lines.

At the time of set-up of the work and grinding wheel, the dressing mechanism is also adjusted. The position of the bracket 345 on the plate 335 is determined by the radial adjustment of the grinding wheel support 52 on the plate 48 while the angular position of the plate 335 on the upright 324 is determined by the angular adjustment of the plate 48 and cradle 45, as clearly indicated in Figures 14 and 15. The plates 386 and 389 are adjusted angularly with reference to the bearing portion 350 of the bracket 345 in accordance with the pressure angles desired on the outside and inside grinding surfaces of the grinding wheel.

For testing the accuracy of set-up on a particular job before actually starting the machine, the operator can put the grinding wheel through its various motions by manual rotation of the handwheel 530 (Figs. 1 and 2). The shaft 101 (Figs. 2 and 9) is splined at its inner end and there is a bevel gear 531 which has a splined connection with this shaft. The bevel gear 531 meshes with a bevel gear 532 which is secured to a shaft 533 on which the handwheel 530 is secured.

When the work has been chucked and the wheel and work are in operative positions, the machine can be started. The wheel will be rotated continuously on its axis and simultaneously swung back and forth across the gear. As it swings back and forth it is moved in the direction of the axis of the shaft 75, being advanced toward the work as the wheel swings in one direction and being withdrawn as the wheel swings back in the opposite direction. During the swinging motion, the wheel is steadily advanced toward the gear to grind the tooth surfaces to their full depth. When full depth position has been reached, the feed-cam 190 operates to withdraw the wheel from engagement with the gear and when the wheel is clear of the gear, the switch 300 is tripped to operate the index mechanism to index the gear. Then the feed-cam again advances the helically moving wheel into engagement with the gear. The means for producing the various motions have been clearly described above and the description need not be repeated here.

When all of the tooth surfaces of the gear have been ground, the operator can move the wheel far enough away from the work to permit removal of the ground gear and chucking of a new gear in place. The wheel is withdrawn from the work, for this purpose, by movement of the carriage 23 on the frame of the machine through manipulation of the valve 435 which controls the movement of the piston 422. The wheel is also withdrawn fully from the work when dressing the wheel and this withdrawal is also controlled by manipulation of the valve 435.

To dress the wheel, the operator first makes sure that the carriage 28 is at one limit of its movement. This is indicated to him by the illumination of the bulb behind the panel 480. When the wheel is in correct position, the operator dresses one side of the wheel by swinging the diamond across the wheel through manipulation of the lever 362. Then he rotates the supporting member 352 on its axis by use of the handle 400, thus positioning the diamond to dress the other side of the wheel and he dresses this last-named side of the wheel by again swinging the diamond across the wheel through manipulation of the lever 362. The grinding wheel is returned to operative position by reversal of the valve 435.

While the invention has been described in connection with a particular embodiment and a particular use, it will be understood that it is capable of further modification and this application is intended to cover any variations, uses, or adaptations of the invention, following in general, the principles of the invention and including such departures from the present disclosure as come within known or customary practice in the gear art and as may be applied to the essential features hereinbefore set forth and as fall within the scope of the invention or the limits of the appended claims.

Having thus described our invention, what we claim is:

1. In a machine for producing gears, a work support, a tool support, a tool mounted on said tool support for arcuate movement across the face of the blank, means for adjusting the tool and blank relative to one another so that the axis about which the tool moves in final cutting position is perpendicular to the pitch plane of the blank, and means for moving said tool about said axis and simultaneously in the direction of said axis.

2. In a machine for producing gears, a work support, a tool support, a dished grinding wheel rotatably mounted on the tool support, means for rotating the grinding wheel on its axis, means for swinging the grinding wheel in a curved path across the face of the gear, and means for moving said grinding wheel in the direction of its axis of swing as it swings across the gear.

3. In a machine for producing gears, a work support, a dished grinding wheel, means for rotating the grinding wheel on its axis, and means for simultaneously imparting a helical motion to said wheel about an axis perpendicular to the pitch plane of the gear to be ground.

4. In a machine for producing gears, a work support, a tool support, a tool mounted thereon, means for reciprocating said tool support to move the tool in an inclined path across the face of the gear blank, and means actuated by said last named means for moving the tool in a direction perpendicular to the pitch plane of the blank as it moves across the face of the blank.

5. In a machine for producing gears, a work support, a tool support, a tool mounted thereon, means for oscillating the tool support to swing the tool back and forth across the face of the gear to be ground, and means for moving the tool in opposite directions axially of its axis of swing as it swings in opposite directions across the gear.

6. In a machine for producing tapered gears, an oscillatory tool support, a frame, a slide reciprocably mounted on the frame, means connecting said slide to said tool support to oscillate said tool support on reciprocation of said slide and means connecting said slide to said tool support to reciprocate said tool support axially of its axis of oscillation on reciprocation of said slide.

7. In a machine for producing tapered gears, an oscillatory tool support, a frame, a slide reciprocably mounted on the frame, means connecting said slide to said tool support to oscillate said tool support on reciprocation of said slide, means connecting said slide to said tool support to reciprocate the tool support axially of its axis of oscillation on reciprocation of said slide whereby to cause the tip surface of said tool to move parallel to the root line of the tooth as the tool swings across the face of the gear, and means for imparting a feed movement to said slide to cause the tool to operate to the desired depth on the blank.

8. The method of producing a tapered gear having longitudinally curved teeth of tapering depth which comprises producing its tooth surfaces by moving a tool in a direction perpendicular to the pitch plane of the gear blank while moving the tool about an axis perpendicular to said plane.

9. The method of producing a tapered gear having longitudinally curved teeth of tapering depth which comprises grinding its side tooth surfaces by rotating a dished wheel in engagement with the gear while swinging the wheel back and forth in a longitudinally curved path across the face of the gear and moving said wheel in opposite directions actually of its axis of swing as it swings in opposite directions across the gear.

10. In a machine for grinding tapered gears, a frame, a work head, a work spindle journaled in said head, a column on which said work head is vertically adjustable, a carrier on which said column is adjustable in a direction axial of the work spindle, a work support adjustable horizontally on the frame and on which said carrier is adjustable angularly about an axis intersecting the axis of the work spindle, an oscillatable tool support, a dished grinding wheel rotatably mounted on the tool support, and means for rotating the wheel and simultaneously oscillating said tool support.

11. In a machine for producing gears, a work support, a tool support, a tool mounted on the tool support, means for imparting a cutting motion to the tool, a carriage on which one of said supports is mounted, a rotary cam for reciprocating said carriage to impart an alternate relative movement of feed and withdrawal between the tool and work support, indexing mechanism for the work support, means for rotating said cam, and electrically operable means controlled by said cam for tripping said index mechanism during the periods of relative withdrawal between said supports.

12. In a machine for grinding gears, a frame, an oscillatory tool support mounted on the frame, a tool head adjustable radially of and angularly about the axis of said tool support, a grinding wheel rotatably mounted on the tool head, a

dressing tool mounted on the frame and means for adjusting said dressing tool about the axis of swing of said tool support and in a direction transverse to said axis.

13. In a machine for grinding gears, a frame, a work support mounted on the frame, a carriage slidably mounted on the frame, a tool support oscillatably mounted on the carriage, a dished grinding wheel rotatably mounted on the tool support, a dressing mechanism, means for adjusting said supports relative to one another to bring the wheel and work into operative relation, means for rotating the wheel and simultaneously oscillating the tool support, means for reciprocating said carriage to impart a depthwise feed movement between the wheel and work, means for moving one of said supports from operative position to bring the dressing mechanism and wheel into operative relation, and means for visibly indicating when the carriage is at one limit of its movement so as to enable the operator to dress the wheel in said position.

14. In a machine for producing tapered gears having teeth of tapering depth, a work support, a tool, means for imparting a helical motion to the tool to cause it to move across the face of the gear and simultaneously cause its tip to move parallel to the root line of a tooth space of the gear, and means for producing a relative feed movement between the tool and gear to cause the tool to operate on the tooth surfaces of the gear to their full depth.

15. In a machine for producing tapered gears having teeth of tapering depth, a work support, a tool support, a dished grinding wheel journaled in the tool support, means for rotating the grinding wheel on its axis, means for imparting a helical motion to the rotating grinding wheel to cause it to move across the face of the gear and simultaneously cause its tip to move parallel to the root line of a tooth space of the gear as it moves across the face of the gear, and means for producing a relative feed movement between the grinding wheel and gear to cause the wheel to operate on the tooth surfaces of the gear to their full depth.

16. In a machine for producing tapered gears having teeth of tapering depth, a work support, a tool support, a dished grinding wheel journaled on the tool support, means for rotating the grinding wheel on its axis, means for imparting a helical motion to the grinding wheel to cause it to move across the face of a gear and simultaneously cause its tip to move parallel to the root-line of a tooth space of the gear, and means for producing a relative feed movement between the grinding wheel and gear to cause the grinding wheel to operate on the tooth surfaces of the gear to their full depth.

17. A method of grinding the tooth surfaces of a tapered gear having teeth of tapering depth which comprises rotating a dished grinding wheel on its axis in engagement with a tapered gear and moving the wheel in a helical path across the face of the gear about an axis perpendicular to the pitch plane of the gear to cause the tip of the wheel to parallel the root-line of a tooth space as the wheel swings across the face of the gear, and producing a relative feed movement between the wheel and gear to cause the wheel to grind the tooth surfaces to their full depth.

18. The method of producing the tooth surfaces of a tapered gear having teeth of tapering depth which comprises moving a tool in a helical path across the face of a gear about an axis perpendicular to the pitch plane of the gear to cause the tip of the tool to parallel the root line of a tooth space of the gear as the tool moves across the face of the gear, and producing a relative feed movement between the tool and gear to cause the tool to operate on the tooth surfaces to their full depth.

19. The method of producing a tapered gear having teeth of tapering depth which comprises maintaining the cutting edge or edges of the tool at a constant inclination to a plane tangent to the pitch surface of the blank while moving the tool across the face of the blank to produce the lengthwise tooth shape and simultaneously moving the tool in a direction perpendicular to said plane as the tool travels across the face of the blank to cause the tip of the tool to travel in a plane tangent to the root surface of the blank or a plane parallel to the last named plane.

20. The method of producing a tapered gear having teeth of tapering depth which comprises maintaining the cutting edge or edges of the tool at a constant inclination to a plane tangent to the pitch surface of the blank while reciprocating the tool across the face of the blank to produce the lengthwise tooth shape and moving the tool in a direction perpendicular to said plane as the tool travels across the face of the blank to cause its tip to travel in a plane tangent to the root surface of the blank or a plane parallel to the last named plane, and producing a relative feed movement between the tool and blank until full depth cutting position is reached, then withdrawing the tool from engagement with the blank and indexing the blank.

21. In a machine for producing tapered gears having teeth of tapering depth, a work support, a tool, means for moving the tool across the face of the work with its cutting edge or edges at a constant inclination to the pitch surface of the work, and means for moving the tool in a direction perpendicular to the pitch surface of the work as it travels across the face of the work so that the tip of the tool moves in a plane tangent to the root surface of the work or a plane parallel to the last named plane.

22. In a machine for producing tapered gears having teeth of tapering depth, a work support, a tool, means for moving the tool across the face of the work with its cutting edge or edges at a constant inclination to the pitch surface of the work, means for moving the tool in a direction perpendicular to the pitch surface of the work as the tool travels across the face of the blank so that the tip of the tool moves in a plane tangent to the root surface of the work or a plane parallel to the last named plane, and means for imparting a relative feed movement between the tool and work to move the tool into full depth cutting engagement with the work.

EDWARD W. BULLOCK.
JAMES E. GLEASON.