March 14, 1939. E. C. VOLLMER 2,150,782

ATTACHMENT FOR LIQUID FUEL BURNERS

Filed April 27, 1937 2 Sheets-Sheet 1

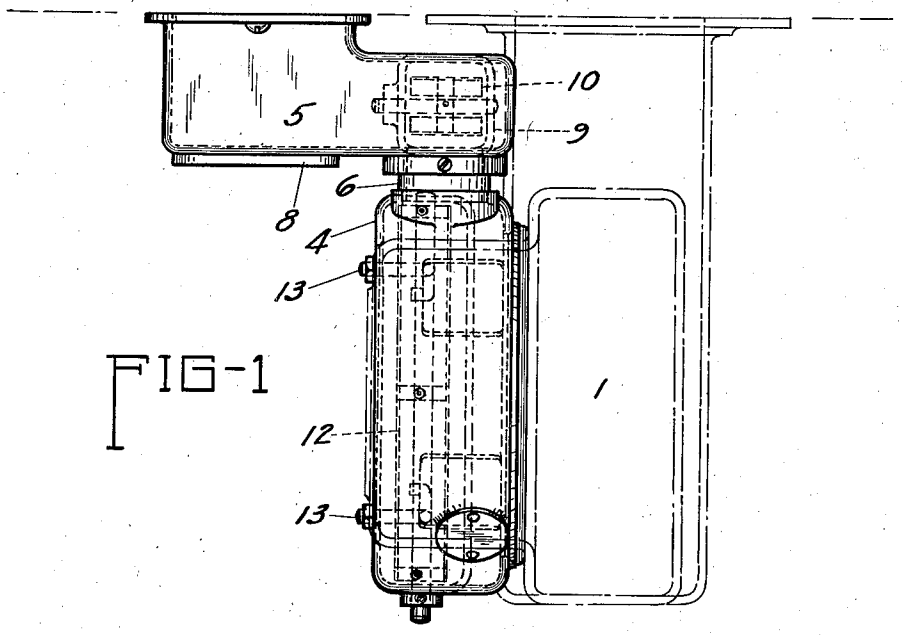

FIG-1

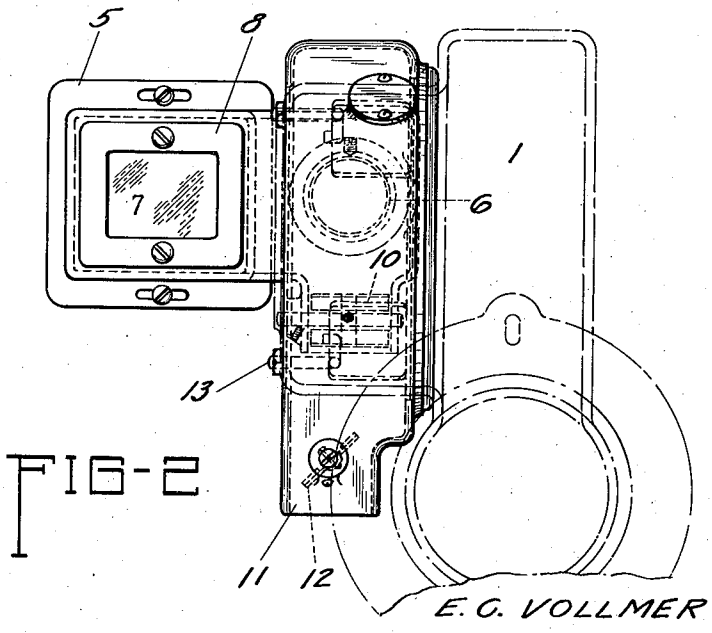

FIG-2

E. C. VOLLMER INVENTOR.

BY

Merrill M. Blackburn

ATTORNEY

March 14, 1939. E. C. VOLLMER 2,150,782

ATTACHMENT FOR LIQUID FUEL BURNERS

Filed April 27, 1937 2 Sheets-Sheet 2

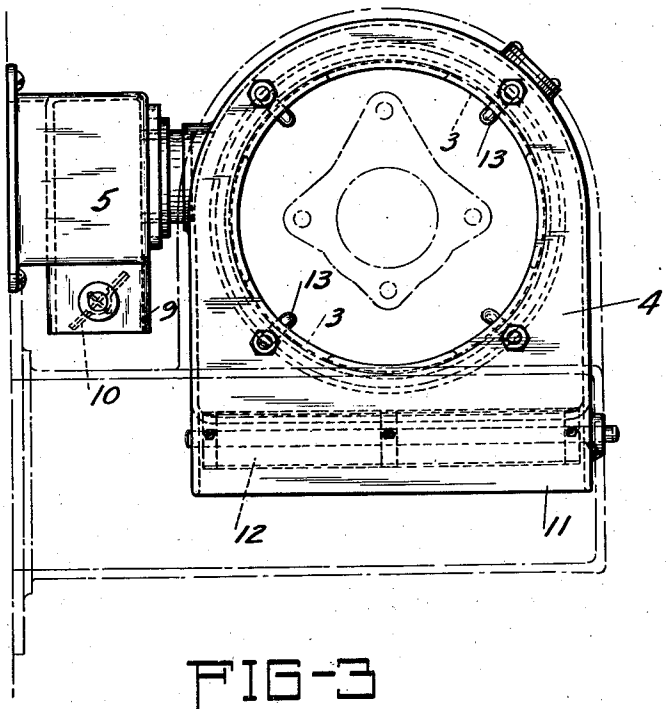

FIG-3

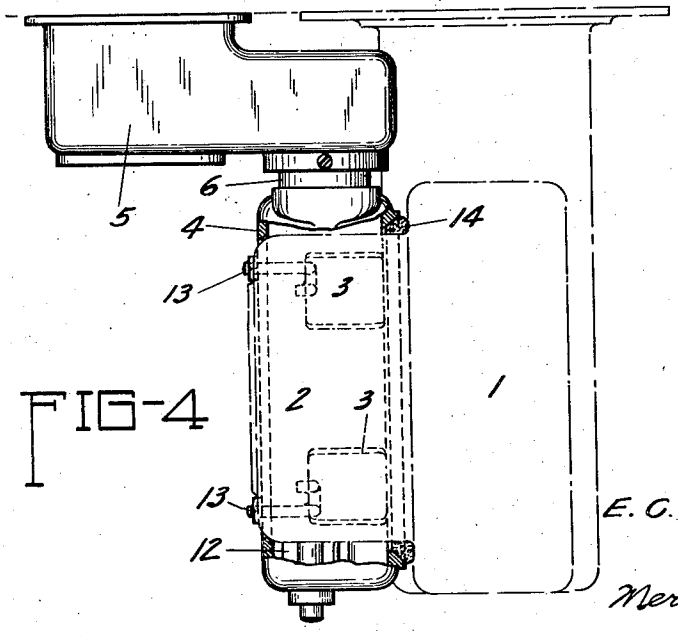

FIG-4

E. C. VOLLMER INVENTOR.

BY Merrill M. Blackburn
ATTORNEY

Patented Mar. 14, 1939

2,150,782

UNITED STATES PATENT OFFICE

2,150,782

ATTACHMENT FOR LIQUID FUEL BURNERS

Earl C. Vollmer, Rock Island, Ill., assignor to Micro-Westco, Incorporated, Bettendorf, Iowa, a corporation of Delaware

Application April 27, 1937, Serial No. 139,150

2 Claims. (Cl. 158—1)

The present invention concerns an anti-pulsation attachment for use in connection with oil burners and relates to an extension of use of the basic idea disclosed in my Patent No. 2,078,884, issued April 27, 1937. Among the objects of this invention are to provide an attachment whereby the advantages of the invention disclosed in the above identified patent may be extended to oil burner units already installed, without reconstruction thereof; to provide a structure for application to previously installed burners whereby disagreeable pulsations, if such exist in connection with such burners, may be eliminated; and such further objects, advantages, and capabilities as will hereafter appear and as are inherent in the construction disclosed herein. My invention further resides in the combination, construction, and arrangement of parts illustrated in the accompanying drawings and, while I have shown therein what is now regarded as the preferred embodiment of this invention, I desire the same to be understood as illustrative only and not to be interpreted in a limiting sense.

In the drawings annexed hereto and forming a part hereof,

Fig. 1 represents a plan view of an embodiment of my present invention, applied to an oil burner unit, the latter being shown in broken lines;

Fig. 2 represents a rear end view of the structure shown in Fig. 1;

Fig. 3 represents a side elevation of this structure taken from the left side of Fig. 2; and

Fig. 4 represents a view similar to Fig. 1 but with a part of the structure comprising my present invention broken away to show the relationship thereof to the air-intake chamber of a burner fan.

It has been found that in furnaces in which the overall efficiency is high, there is a certain variation in pressure within the furnace which causes fluctuation of the burner flame and unpleasant pulsations, resulting in undue noise when the burner unit is operating. When such a furnace is already heated by an oil burner, the owner may not desire to go to the expense of installing a new burner to eliminate this undesirable condition. Purchase of a new burner may be avoided by installing an attachment in accordance with the present invention.

Reference will now be made in greater detail to the annexed drawings for a more complete description of this invention. In these drawings, the oil burner unit is shown in dot-and-dash lines, while my attachment is shown in solid lines, parts thereof being shown in dotted lines where the structure is concealed from view. In these drawings, the fan housing of the burner unit is indicated by the numeral 1 and the air-inlet chamber by the numeral 2. In the form chosen for illustration, the actual air-inlet into the fan chamber 1 is in the side wall thereof and is surrounded by the air-inlet chamber 2, and to this chamber my attachment is secured in a manner to be presently discussed. The peripheral wall of the air-inlet chamber 2 is provided with a plurality, preferably four, of air-inlet openings 3, indicated by dotted lines in Figs. 3 and 4.

My attachment comprises a housing 4 to surround the air-inlet in the fan chamber and to be connected in air-tight relation thereto, a chamber 5 and a conduit 6 connecting the chamber 5 to the housing 4. An opening is formed in the furnace wall so that direct communication may be had from outside the furnace to the firebox in the vicinity of the inner end of the burner unit. The chamber 5 is attached to the furnace wall so as to enclose the opening through the wall and it is attached thereto in substantially air-tight relationship. A suitable heat-resisting transparent window 7 is mounted in a frame 8 detachably attached to the front of the chamber 5 so that one may observe the appearance of the flame in the firebox without opening same. If it is desired to get access to the interior of the firebox without removing the attachment, this can be done by taking out the screws holding the frame 8 and removing the frame.

The chamber 5 is provided with an auxiliary air-inlet 9, the passage through which is controlled by a damper 10. The housing 4 has a main air-inlet 11 controlled by a damper 12 by means of which the main air supply to the fan may be regulated. A plurality of hook-bolts 13 pass through the end wall of the housing 4, as shown in Fig. 3, and engage in openings 3 in the wall of the air-inlet chamber. The nuts on these bolts are tightened up to draw the housing into tight engagement with the peripheral wall of the air-inlet chamber. A gasket 14 is placed between the housing 4, the air chamber, and the fan housing to form a tight joint at this place so as to prevent leakage of air through this joint.

During the normal operation of the burner, the main air supply enters through the air-inlet 11 and a smaller air supply through the inlet 9. If there is a tendency for pulsations to develop in the furnace, the force thereof is spent through the chamber 5, the small amount of products of combustion escaping from the combustion cham-

ber passing through chamber 5, conduit 6, and housing 4 into the fan housing 1, the temperature of such products of combustion being reduced first by mixture thereof with the air entering through the auxiliary air-intake and then being further reduced by the air entering through the main air-intake 11.

The opening through the furnace wall relieves whatever pulsations develop or tend to develop in the furnace, and the firebox gases do not escape into the basement, as is true when the furnace door is left open, which is sometimes done. These gases pass through the chamber 5, the conduit 6, and the housing 4 into the air-inlet chamber 2 and from here to the fan housing 1. This venting of the pulsating gases eliminates the tendency to cause vibration of the furnace parts and structures connected therewith and the undue noises resulting therefrom. The term "furnace" is used herein with its generic meaning, as given in Webster's New International Dictionary, rather than with its restricted commercial meaning of "hot air furnace."

It will of course be understood that the specific description of structure set forth above may be departed from without departing from the spirit of this invention as set forth in this specification and the appended claims.

Having now described my invention, I claim:

1. An attachment for a liquid fuel burner having an air-inlet and a fan housing and a fuel and air-delivery tube having its delivery end inserted into the combustion chamber of a furnace, said attachment comprising a housing to enclose the air-inlet of the burner, a chamber to be attached to a wall of the furnace over an opening in said wall and in communication with the combustion chamber of the furnace, a conduit connecting the housing to the chamber attached to the furnace wall, the housing having a main air-inlet and the chamber having an auxiliary air-inlet, and dampers in said air-inlets to regulate the amount of air admitted to the housing and the chamber, whereby to control the escape of products of combustion from the combustion chamber to the fan housing.

2. An anti-pulsation attachment for an oil burner unit operating under forced draft having an air-inlet and a fan chamber, said attachment comprising a compartment to be attached to a furnace wall over an opening in said wall and in communication therethrough with the combustion chamber of the furnace, a housing for the air-inlet of the burner unit to be attached to the burner structure over said air-inlet, and an air-carrying connection between the compartment and the housing, said housing having a damper-controlled air-inlet whereby the main supply of air to the burner unit may be regulated, and the compartment having a damper-controlled auxiliary air-inlet whereby air may be admitted in regulated volume to mix with any products of combustion escaping from the furnace and passing to the fan chamber of the burner unit.

EARL C. VOLLMER.