3 Sheets—Sheet 1

W. R. HAMILTON & G. C. SMITH.

Railway Car-Truck.

No. 205,956. **Patented July 16, 1878.**

FIG. 1.

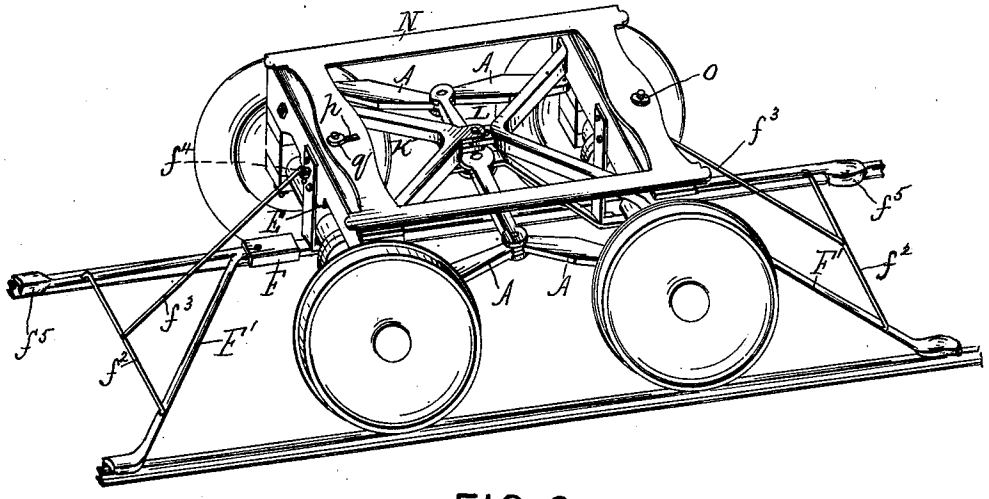

FIG. 2.

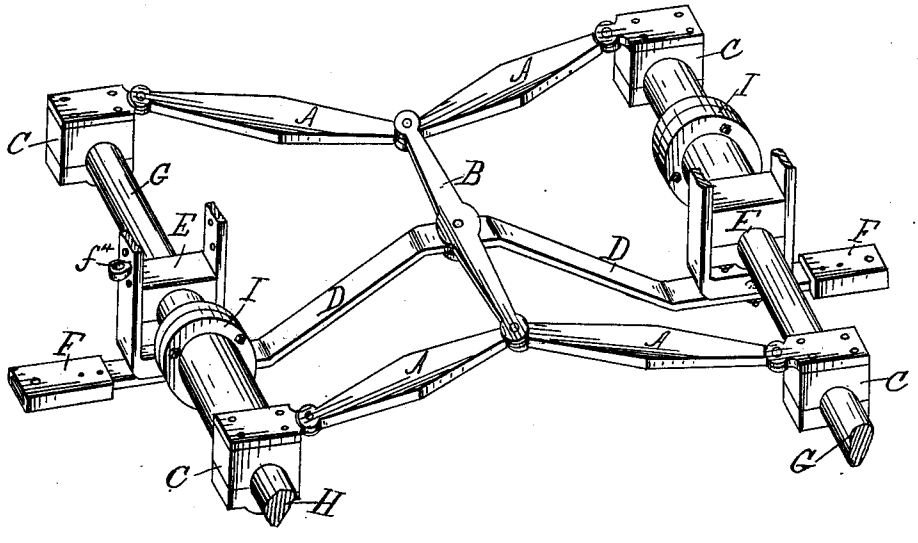

WITNESSES

Saml R. Turner

Penn Halsted

INVENTORS

G. Canning Smith, 2

Wm R. Hamilton, 1

by John J. Halsted their ATTORNEY

N. PETERS, PHOTO-LITHOGRAPHER, WASHINGTON, D. C.

3 Sheets—Sheet 2

W. R. HAMILTON & G. C. SMITH.

Railway Car-Truck.

No. 205,956. **Patented July 16, 1878.**

FIG. 3

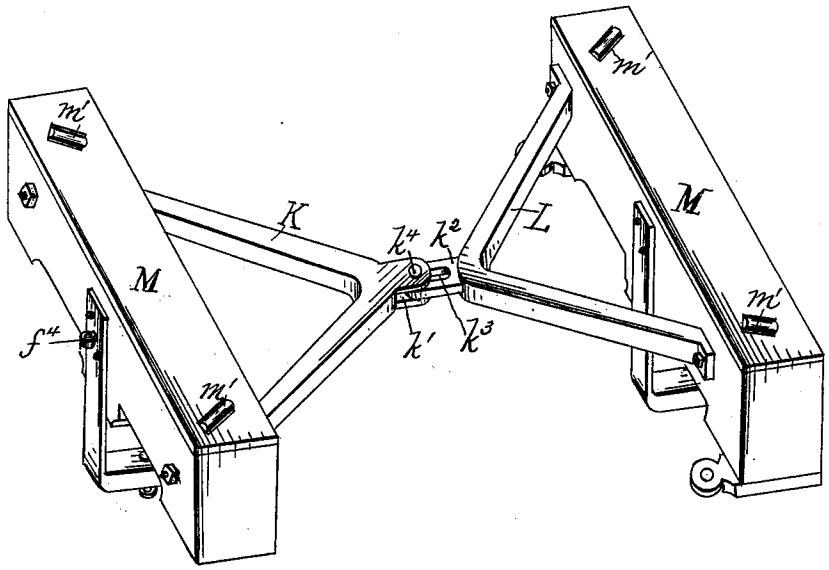

FIG. 4.

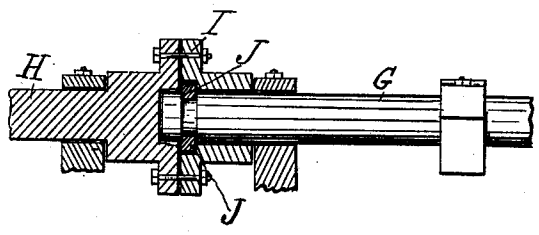

WITNESSES

Saml R. Turner

Penn & Calsted

INVENTORS

G. Canning Smith 2

and

Wm R. Hamilton 1

by John J. Halsted. their ATTORNEY

N. PETERS, PHOTO-LITHOGRAPHER, WASHINGTON, D. C.

3 Sheets—Sheet 3.

W. R. HAMILTON & G. C. SMITH.

Railway Car-Truck.

No. 205,956. Patented July 16, 1878.

FIG. 5.

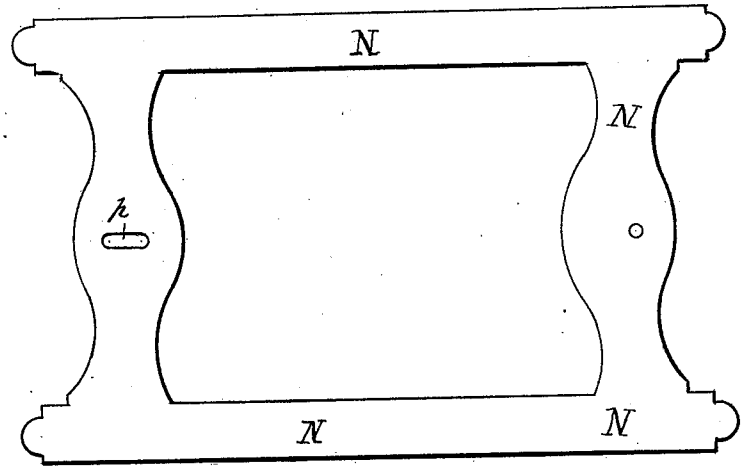

FIG. 6.

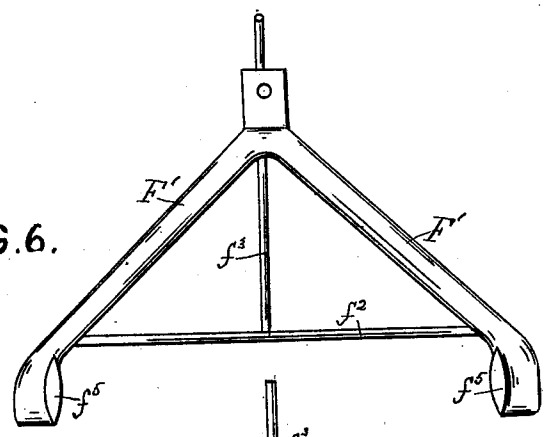

FIG. 7.

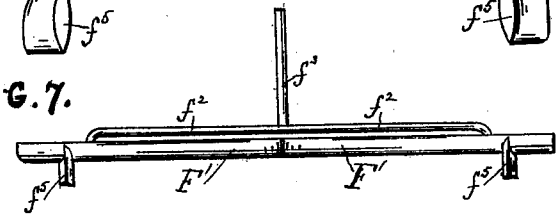

WITNESSES

Saml R. Turner

Penn & Halsted

INVENTORS

G. Canning Smith 2

Wm R. Hamilton 1

by John J. Halsted their ATTORNEY

N. PETERS, PHOTO-LITHOGRAPHER, WASHINGTON, D. C.

UNITED STATES PATENT OFFICE.

WILLIAM R. HAMILTON AND G. CANNING SMITH, OF MENDOCINO, CAL.

IMPROVEMENT IN RAILWAY-CAR TRUCKS.

Specification forming part of Letters Patent No. **205,956**, dated July 16, 1878; application filed May 29, 1878.

To all whom it may concern:

Be it known that we, WILLIAM R. HAMILTON and G. CANNING SMITH, both of Mendocino city, in the county of Mendocino and State of California, have invented certain new and useful Improvements in the Running-Gear of Railroad and Street Cars, and other kinds of rolling stock; and we do hereby declare that the following is a full, clear, and exact description of our invention, which will enable others skilled in the art to which it appertains to make and use the same, reference being had to the accompanying drawings, and to letters of reference marked thereon, which form a part of this specification.

Heretofore much difficulty has been experienced in efforts to reduce or overcome friction, and to lessen the power required for drawing or driving railway-cars, locomotives, and street-cars around curves or circles, and in avoiding the consequent breakage of wheels and axles and damage to the tracks, and many devices have been devised with a view to avoiding these difficulties.

Our present invention consists in certain novel mechanism, hereinafter described, aiming to remedy or avoid the defects of existing constructions, and also to permit the tracks of the road to be built of nearly or substantially the same width as the track of the wheels, thus avoiding a swinging and jarring motion; to avoid the need of raising the outer rail of the curve of a track, and to reduce the weight of the car more practically to a central and equal bearing.

In the accompanying drawings, Figure 1 is a perspective view of a running-gear for cars embodying our invention; Fig. 2, a perspective with the axle-beams removed, and showing only the lower or under mechanism; Fig. 3, the upper mechanism connected with the axle-beams; Fig. 4, a section of the compound or divided axle; Fig. 5, a plan of the top frame; and Figs. 6 and 7, an under-side view and a front-end view, respectively, of the track-guides.

A A represent levers, each connecting one of the axle-boxes with one of the ends of a cross-bar, B. The boxes are shown at C. D D are two levers, which may be either straight or bent, as circumstances may require, and their inner ends are attached to and work upon a pivotal or jointed connection on the cross-bar B; and each of these levers D is also centered or fulcrumed on a bolt or pin on the under side of one of the middle or central axle-boxes E, or to a metal strap around said box. At the outer end of lever D is a slotted or hollow box, F, adapted to receive and to be connected to the forked or two-armed guide F′. Each of these forked guides F′ is provided, as shown, with a cross-bar, f^2, and a suspending-rod, f^3, which latter is arranged to hook into an eyebolt, f^4, on the central axle-box E; and each arm of the guide F′ has on its forward end and on its under side a downwardly-projecting flange, f^5, occupying, when in use, a position just inside the track-rail to which it is adjacent, and the the two flanges of the guide are distant from each other a space equal to the distance between the flanges of two opposite wheels, and they serve, when the car is in motion and turning a curve in the road, mechanically and positively to turn both the axles in the direction and to the degree required for and determined by the road-curve, whatever such curve may be. The link or cross-bar B, when actuated by the lever D through the agency of the flanges, communicates an equal movement to each of the levers A, and, consequently, to each of the wheels of either axle, to effect the proper passing around a curve.

In connection with this system we employ divided axles, whereby either wheel on a given axle may be free to revolve faster or slower than its fellow wheel. For this purpose the axle is in two parts, G and H, the latter being keyed to the couplings I, which revolve with it, and the part G has an annular groove or recess, adapted to receive a projection or ring, J, on the inner side of the couplings, thus allowing each of these short or partial shafts to revolve independently of the other.

We will now describe the connections between the axle-beams, referring more particularly to Fig. 3. K is a brace bolted to the axle-beam, and having a mortise, k^1, to receive a tenon, k^2, projecting from the brace L, bolted to the beam of the other axle. The tenon has a slot, k^3, through which passes the bolt k^4, which connects the braces K and L, the slot permitting all the play and motion of these

parts relatively to each other as the positions of the axles are changed relatively to each other when the cars are moving.

M M are metal plates, severally bolted or secured to the axle-beams, and preferably provided with friction-rollers *m'*.

N is a frame, resting on the plates M M, or on the friction-rollers in the same, and it is pivoted at one end on the center-bolt O, and at its other end is provided with a slot, *p*, whereby, upon the turning of the axles, it may be free to shift its position accordingly on a bolt, *q*, inserted in the plate M.

From the above description it will now be seen that the flanges on the guides F', controlled and actuated as they must be by the varying curvatures or tortuous windings of the track, exercise a positive control over the axles, insuring them the true positions and changes under all conditions; that the two axles have a positive and sympathetic action simultaneously with each other; that the strain on the wheels and axles is materially lessened, and the safety of railway travel much enhanced.

We claim—

1. In combination with the divided axles, the flanged guides F', levers D D, cross-bar B, and levers A A A A, substantially as and for the purposes set forth.

2. In combination with the axles and with the levers A A A A and cross-bar B, the braces K and L, connected together and secured to the axle-beams, substantially as and for the purpose described.

3. In combination with the divided axles, the flanged guides F', levers D D, cross-bar B, levers A A A A, braces K L, and frame N, substantially as and for the purpose described.

WILLIAM R. HAMILTON.
G. CANNING SMITH.

Witnesses:
JOHN E. BUNNER, Jr.,
I. M. SMITH.