Aug. 13, 1968 O. L. CRISP 3,396,854

OUTRIGGER STABILIZER FOR CRANES

Filed June 19, 1967

FIG. 1

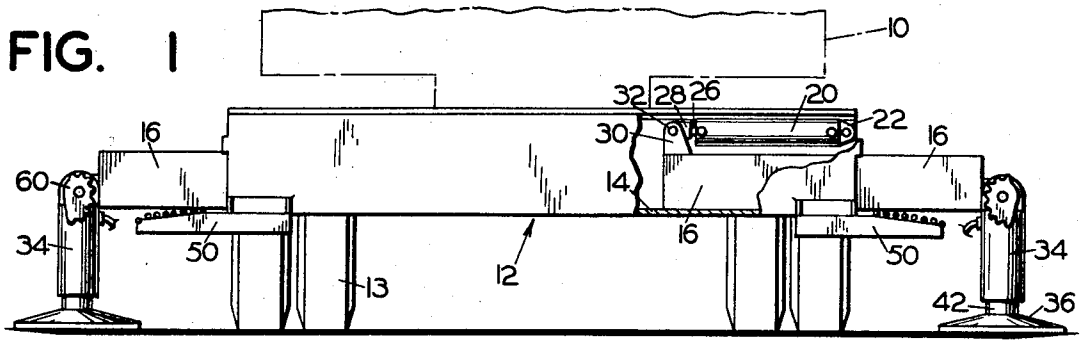

FIG. 2

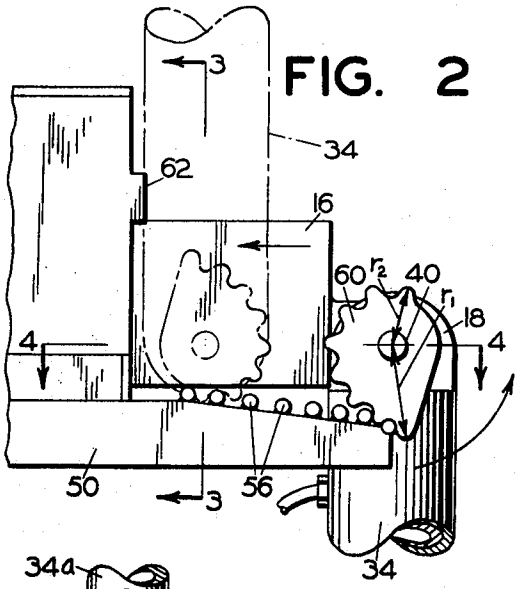

FIG. 3

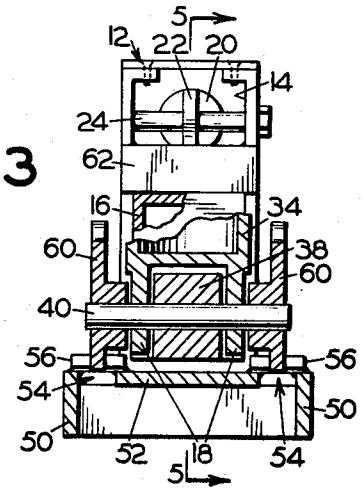

FIG. 6

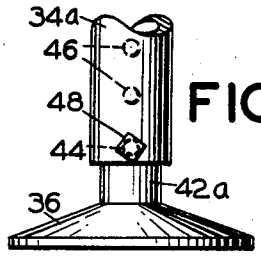

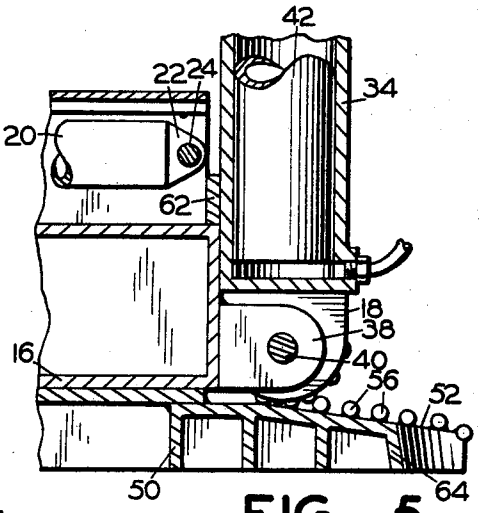

FIG. 5

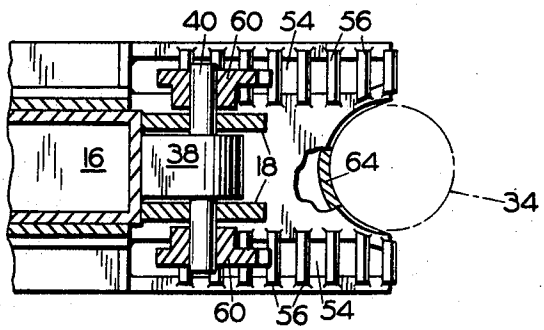

FIG. 4

INVENTOR.
ORIS L. CRISP

BY Eugene S. Farley

ATTORNEY

United States Patent Office

3,396,854

Patented Aug. 13, 1968

1

3,396,854

OUTRIGGER STABILIZER FOR CRANES

Oris L. Crisp, Box 637, Heppner, Oreg. 97836

Filed June 19, 1967, Ser. No. 647,009
8 Claims. (Cl. 212—145)

ABSTRACT OF THE DISCLOSURE

An outrigger stabilizer for cranes comprises a beam arranged for extension and retraction. A stabilizer leg with attached foot is pivoted to the end of the beam. Rack and pinion means raise and lower the leg and foot with retraction and extension of the beam.

This invention relates to an outrigger assembly for stabilizing cranes, derricks, hoists and other load-lifting apparatus.

Although it is commonplace to fit cranes and similar apparatus with stabilizing feet, the stabilizing arrangements of the prior art have been relatively cumbersome, awkward, inefficient, and inapplicable in certain locations of the crane. In addition, it frequently is necessary manually to attach them on the job site and then manually to remove them before moving the crane to another location.

It is the general purpose of the present invention to provide an outrigger stabilizer for cranes and like apparatus which overcomes the above objections in that it is simple in its construction, efficient in its operation, applicable universally to various types of cranes and adjustable without disassembly between a raised, inoperative position and a lowered, ground-engaging position.

In addition the outrigger stabilizer of my invention is braced when in use, rapid in its adjustment between raised and lowered positions, usable singly or in pairs, positioned high above the axle of the crane where it will not bury in mud or banks, and shiftable to an inoperative position in which it is out of the way when traveling.

The manner in which the foregoing and other objects of this invention are accomplished will be apparent from the specification and claims considered together with the accompanying drawings, wherein:

FIG. 1 is a fragmentary view of a crane in front elevation, partly in section; showing the manner of mounting the outrigger stabilizer of my invention;

FIG. 2 is a detailed fragmentary view in side elevation illustrating the construction of one of the outrigger stabilizing units;

FIG. 3 is a transverse sectional view taken along line 3—3 of FIG. 2;

FIG. 4 is a longitudinal sectional view taken in a horizontal plane along line 4—4 of FIG. 2;

FIG. 5 is a longitudinal view taken in a vertical plane along line 5—5 of FIG. 3; and

FIG. 6 is a fragmentary, detail view in elevation of a stabilizing foot and leg assembly in an alternate form.

Generally stated, the outrigger stabilizer of my invention comprises a rack fixed to the crane and extending outwardly therefrom. A guideway is arranged parallel and adjacent to the rack and houses a support beam. Drive means are connected to the beam for reciprocating it between the extended and retracted positions.

Pivot means pivotally connects the inner end of the stabilizing leg to the outer end of the beam. A foot is connected to the outer end of the leg. Pinion gear means are fixed to the inner end of the leg in engagement with the rack. They are operative to shift the leg angularly between a raised, inoperative position and a lowered ground-engaging position with retraction and extension of the beam respectively.

2

Thus there is mounted at all times on the crane an integral stabilizing assembly which may be shifted to an inoperative position when the crane is traveling, but which rapidly may be lowered to a ground-engaging, operative position when the work site is reached.

Considering the foregoing in greater detail and with particular reference to the drawings:

As shown in FIG. 1, the outrigger stabilizer of my invention may be used in conjunction with a crane or related apparatus having a body **10** mounted on a frame or chassis **12**. The crane is mounted on wheels **13** and accordingly is mobile so that it may be moved from place to place.

The crane is provided in selected locations, for example at the front and back, on both sides, with independently operated outrigger stabilizing units.

To this end there is provided a guideway **14** in which slideably is mounted a beam **16**. The forward end of the beam is provided with an outwardly projecting clevis **18**.

Drive means are provided for reciprocating beam **16** between retracted and extended positions.

In the illustrated form of the invention the drive means comprises a fluid operated cylinder, preferably an hydraulic cylinder **20**. On the rear end of the case of the cylinder is a tab **22** which pivotally is secured to the frame by means of a pivot pin **24**.

The piston rod **26** of the cylinder has a head **28** which pivotally is connected to spaced standards **30** on beam **16** by means of pivot pin **32**. Thus reciprocation of piston rod **26** of the cylinder extends and retracts beam **16**.

Mounted on the outer end of beam **16** are a stabilizer leg **34** and a stabilizer foot **36**.

To mount stabilizer leg **34**, the outer end of beam **16** is provided with a forwardly-projecting, transversely perforated ear **38**. Ear **38** is received between the component members of clevis **18** and is held in place by a rotatable shaft **40**.

Stabilizer leg **24** preferably comprises a double acting hydraulic cylinder **34**, the piston **42** of which forms a connection for foot **36**. However, an alternate leg construction may be employed is desired.

As shown in FIG. 6 the alternate leg may comprise a cylinder **34*a*** having an adjustment opening **44**. The connecting shaft **42*a*** of foot **36** is provided with longitudinally spaced transverse openings **46**. The openings through shaft **42*a*** and cylinder **34*a*** may be placed in registration with each other at the desired degree of extension of foot **36** and pin **48** inserted through the registering openings, thus releasably locking the foot in its desired position of extension.

Means also are provided for moving leg **34** angularly between raised and lowered positions contemporaneously with the retraction and extension of beam **16**. This is accomplished by rack and pinion means illustrated particularly in FIGS. 2 and 4.

Fixed to the underside of transverse frame member **12** is a stout, reinforced plate **50**. The upper surface **52** of the plate is downwardly tapered in the outward direction.

Plate **50** mounts a pair of spaced racks **54** having transverse teeth **56**.

Rotatable shaft **40**, which is coupled to beam **16**, has fixed to each of its ends a pinion gear **60**. The teeth of these gears mesh with the teeth of racks **54**.

In the preferred form of the invention, pinion gears **60** are segmental and eccentric in radius. As evident particularly in FIG. 2, r_1, which is the radius of the working segment of the gear in the operative position of leg **34** and foot **36**, is substantially greater than the dimension r_2, which is the radius of that segment of the gear which works when the leg and foot are in their elevated or retracted position.

This arrangement has two advantages.

First, it gives more lifting power at the beginning of the stroke, where it is most needed. Second, it shortens the stroke by as much as one-half, thereby making it possible to build the unit more compactly.

Stop means are provided for limiting the oscillating movement of leg **34** at the extremes of its travel path. At the upper extremity of its travel path it abuts against a beam guide and stop bar **62** suitably mounted on the front end of structural member **12**. At the lower end of its travel path it abuts against an arcuate stop **64** formed integrally with plate **50** in the leading end thereof.

As is evident particularly in FIG. 4, when the leg nests within this arcuate stop it is braced in three directions. The unit thus is strong in its operational position.

To operate the unit, cylinder **20** is extended to retract beam **16** from its FIG. 1 position. During its retraction pinion gears **60** engage racks **54**.

Continuing movement of beam **16** toward its retracted position thereupon will swing stabilizing legs **34** and feet **36** upwardly in the direction indicated by the arrow of FIG. 2. This angular motion will continue until the legs abut against stop pad **52**.

The crane then may be moved to another location and the above sequence reversed. Cylinder **20** is retracted, extending beam **16**. Engagement of pinion gears **58** with racks **54** will lower the leg-foot assembly to the full line position of FIG. 2, where it is fully braced by arcuate stop **54**. Extension of cylinder **34** then will place foot **36** firmly in contact with the ground, with the upper surface of beam **16** bearing against beam guide and stop bar **62**. In the alternative, foot **36** may be adjusted relative to leg **34***a* by placing pin **48** in the appropriate one of registering openings **44**.

Any one or all of the units may thus be employed, depending upon the terrain in which the crane is to be used.

Thus it will be seen by the present invention I have provided an outrigger stabilizer for cranes which is simple in construction, secure in use and versatile in its application under all of the commonly encountered conditions of operation.

It is to be understood that the form of my invention herein shown and described is to be taken as an illustrative example of the same and that various changes in the shape, size and arrangement of parts may be resorted to without departing from the spirit of my invention or the scope of the subjoined claims.

Having thus described my invention, I claim:

1. An outrigger stabilizer for cranes comprising:

(a) rack means fixed to the crane and extending outwardly therefrom,

(b) a support beam,

(c) a guideway arranged parallel and adjacent to the rack and housing the beam,

(d) drive means connected to the beam for reciprocating it between retracted and extended positions,

(e) a stabilizing leg,

(f) pivot means pivotally connecting the inner end of the leg to the outer end of the beam,

(g) a foot connected to the outer end of the leg,

(h) and pinion gear means fixed to the inner end of the leg meshing with the rack and operative to shift the leg with attached foot angularly between a raised, inoperative position and a lowered ground-engaging position with retraction and extension of the beam respectively.

2. The outrigger stabilizer of claim **1** wherein the drive means for the beam comprises fluid operated cylinder means.

3. The outrigger stabilizer of claim **1** wherein the stabilizing leg comprises a telescoping stabilizing leg of adjustable length.

4. The outrigger stabilizer of claim **1** wherein the stabilizing leg comprises a telescoping stabilizing leg of adjustable length and including lock pin means for releasably locking the telescoping leg in selected positions of extension.

5. The outrigger stabilizer of claim **1** wherein the stabilizing leg comprises a telescoping stabilizing leg of adjustable length, the leg mounting a fluid operated cylinder having a reciprocating piston rod, and means for mounting the foot on the end of the piston rod.

6. The outrigger stabilizer of claim **1** wherein the pinion gear means is of eccentric radius, the radius increasing as the leg moves to its operative position, and wherein the rack means is tapered to accommodate the eccentric radius of the pinion gear means.

7. The outrigger stabilizer of claim **1** and including brace means bracing the leg in its lowered, ground engaging position.

8. The outrigger stabilizer of claim **1** wherein the rack means comprises a pair of parallel racks positioned one on each side of the stabilizing leg and interconnected by a plate, wherein the pinion gear means comprise a pair of pinion gears arranged one on each side of the stabilizing leg and engaging the racks, and wherein the connecting plate connecting the racks is provided with an arcuate cutaway portion dimensioned to receive the stabilizing leg in bearing, bracing relationship.

References Cited

UNITED STATES PATENTS

2,131,479	9/1938	McGiffert	212—145
2,777,586	1/1957	Boysen	212—145
3,167,188	1/1965	Burgess	212—145

RICHARD E. AEGERTER, *Primary Examiner.*

H. C. HORNSBY, *Assistant Examiner.*