J. KIRBY, JR. & T. SCULLIN.

METAL SASH.

APPLICATION FILED MAY 25, 1916.

1,268,581.

Patented June 4, 1918.

2 SHEETS—SHEET 1.

Fig. 1

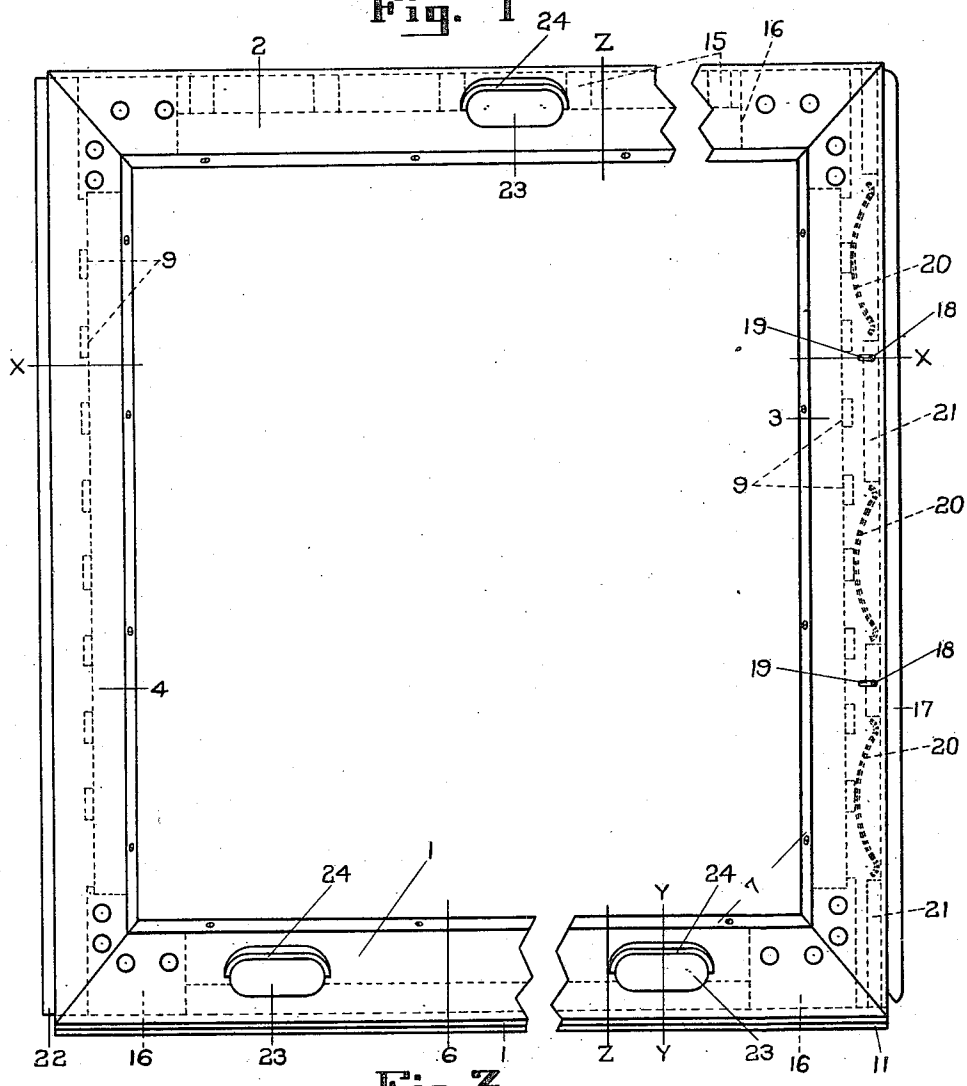

Fig. 3

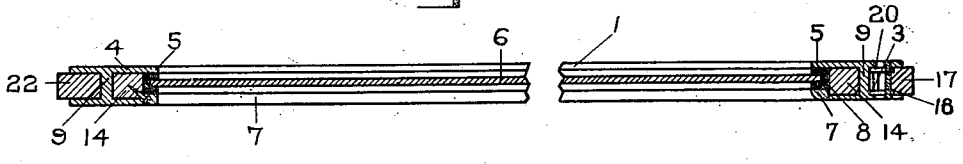

Attest.

E. B. Lehman.

H. D. Eiche.

Inventors.

John Kirby Jr.

Teran & Scullin

By Edward S. Reed

Atty.

J. KIRBY, JR. & T. SCULLIN.

METAL SASH.

APPLICATION FILED MAY 25, 1916.

1,268,581.

Patented June 4, 1918.

2 SHEETS—SHEET 2.

Fig. 2.

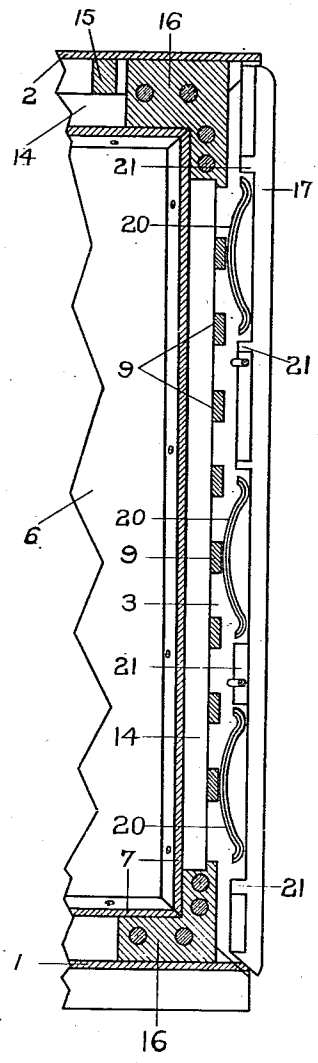

Fig. 4.

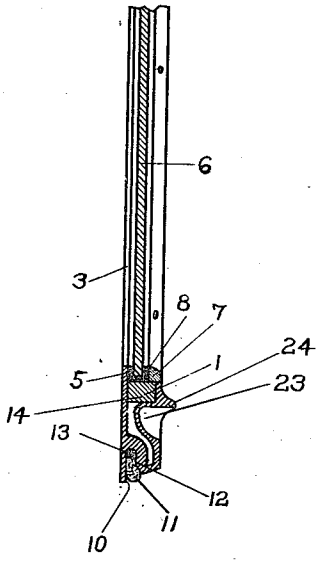

Fig. 5.

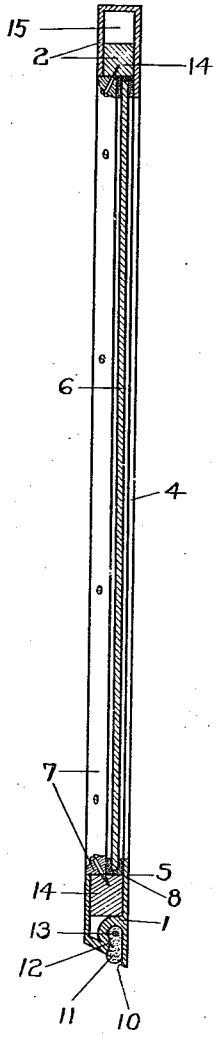

Attest.

E. B. Lehman

H. D. Eiche.

Inventor.

John Kirby Jr.

Terance Scullin.

By Edward L. Reed

Atty.

UNITED STATES PATENT OFFICE.

JOHN KIRBY, JR., OF DAYTON, AND TERANCE SCULLIN, OF CLEVELAND, OHIO, ASSIGNORS TO THE DAYTON MANUFACTURING COMPANY, OF DAYTON, OHIO, A CORPORATION OF OHIO.

METAL SASH.

1,268,581. Specification of Letters Patent. Patented June 4, 1918.

Application filed May 25, 1916. Serial No. 99,899.

To all whom it may concern:

Be it known that we, JOHN KIRBY, Jr., a citizen of the United States, residing at Dayton, in the county of Montgomery and State of Ohio, and TERANCE SCULLIN, a citizen of the United States, residing at Cleveland, in the county of Cuyahoga and State of Ohio, have invented certain new and useful Improvements in Metal Sash, of which the following is a specification, reference being had therein to the accompanying drawing.

This invention relates to a metal window sash and while it is designed more particularly for use in connection with railway cars, it is capable of use in connection with structures of various kinds.

One object of the invention is to provide a simple and inexpensive metal sash which will be light in weight and of a strong durable construction which will not be easily distorted from its true shape.

It is also an object of the invention to provide such a sash in which ordinary wood fastening devices, such as screws, may be used for attaching the glass retaining strip to the sash rail, and, further, to so construct the sash as a whole that it will fit snugly in its frame without binding.

In the accompanying drawings Figure 1 is a front elevation of a window sash embodying our invention; Fig. 2 is a vertical sectional view taken through one of the vertical sash rails just inside of one of the members forming the rail; Fig. 3 is a transverse sectional view taken on the line *x*—*x* of Fig. 1; Fig. 4 is a transverse sectional view taken on the line *y*—*y* of Fig. 1; and Fig. 5 is a transverse sectional view taken on the line *z*—*z* of Fig. 1.

In these drawings we have illustrated one embodiment of the invention and have shown the same as applied to a sash designed for use in a steel railway car. It will be obvious, however, that the shape and style of the sash may be varied to accommodate the same to structures of various kinds without in any way deviating from the spirit of the invention.

In that embodiment of the invention here shown the sash is made up of four sash rails, the top and bottom rails being indicated by the reference numerals 1 and 2, respectively, while the side rails are indicated by the reference numerals 3 and 4, respectively. Each sash rail preferably comprises two side members which are arranged substantially parallel one with the other and constitute the inner and outer faces, respectively, of the rail. These side members are rigidly connected one to the other but are spaced apart. One member of each sash rail, in the present instance the rear member, preferably projects inwardly a short distance beyond the edge of the other member of the rail thus forming a support, as shown at 5, to receive the edge of the pane of glass 6. The glass is secured against the supporting edges of the sash rails by means of the usual glass-retaining members or strips 7, which are secured to the rails in the manner to be hereinafter described. The edge of the glass is preferably incased in a packing 8, such as a channel of soft rubber, to cushion the edge of the glass and prevent rattling. While the sash rails may be formed in various manners, we prefer that each rail should be cast in a single piece and the rails may, if desired, differ slightly in the details of their construction. In the particular sash here shown, each rail is provided along its inner edge with a channel or longitudinal recess 33 formed between the two members of the rail, and the vertical sash rails, 3 and 4, are provided with such channels or longitudinal recesses along both their inner and outer edges, the latter being indicated by the numeral 34. To this end the vertical sash rails 3 and 4 have their parallel side members connected one to the other by connecting and spacing members which are arranged substantially midway between the inner and outer edges of the rail and are here shown as a series of lugs 9, cast integral with the side members of the rail. The bottom sash rail 1 is beveled on its outer edge to conform to the sloping sill of the window frame and is provided with a longitudinal channel 10 adapted to receive a weather strip 11 which projects slightly below the edge of the sash and engages the sill to form a tight joint. The channel 10 for the weather strip is preferably formed in the rail by casting and extends the full length of the rail. The wall of the channel 10 is provided with a longitudinal projection or rib 12, arranged between the inner and outer edges of the channel, which serves to reduce the width of the

intermediate portion of the channel. The weather strip 11 is of yieldable material and is inserted in the channel 10 from one end of the rail, the central portion of the strip being compressed to conform it to the shape of the channel. By thus conforming the strip to the shape of the channel it is held securely in position within the same and cannot be readily withdrawn. If it should be desirable to more firmly retain the weather strip against transverse movement in the channel, a wire or other non-yieldable body may be inserted in the inner portion of the weather strip, as shown at 13, and this wire will so limit the compressibility of that portion of the strip that considerable force will be required to move it past the projection 12. The inner portions of the two members of the sash rail are spaced apart to form between them a channel, the bottom of this channel being formed by the inner wall of the weather strip channel 10. The adjacent ends of the several sash rails may be connected one to the other in any suitable manner, but it is necessary that this connection should not only be a very rigid, durable one, but that it should be smooth and susceptible of being practically concealed when the sash is finished. To accomplish this we preferably miter the adjacent ends of the rails to form a smooth joint and insert between the side members of said rails a connecting block 16, which bridges the joint and extends well into each rail, the block being preferably angular to permit of this arrangement. The block is rigidly secured in position by means of suitable fastening devices, such as rivets or screws, and the resulting joint is exceedingly strong and durable and the abutting edges of the rails are effectually prevented from relative movement which would tend to break the finish on the sash.

The use of machine screws, or metal fastening devices of any kind, to secure the glass-retaining strips to the sash rails of metal sashes is objectionable for various reasons, such as the difficulty in alining the openings in the glass-retaining strip exactly with the threaded openings in the rail, and the difficulty of securing the strip if the threads in one of the openings in the rail should become worn or should be stripped. We have, therefore, so constructed the sash that ordinary wood screws or similar fastening devices can be used, thus enabling a fastening device to be placed at almost any point along the strip. To accomplish this we have mounted in the channels formed at the inner edges of the sash rails, blocks of wood, which, in the present instance, are in the form of strips 14 extending lengthwise of the respective sash rails and held firmly therein. The wooden strips may be secured within the channels in any suitable manner, but in the present instance they are seated against the bottoms of the channels and are fitted snugly between the side members of the rail, which serves to hold them in position. The wooden strips, or blocks, terminate substantially flush with the inner edge of the front or narrower members of the respective sash rails, so that when the glass has been placed in position the glass-retaining strips will rest upon the glass close to the edges of the respective wooden filler strips and the usual fastening screws may be passed through the retaining strips into the filler strips, in substantially the same manner as is done with wooden sash. In the case of the vertical sash rails, 3 and 4, the bottoms of the channels are formed by the connecting lugs 9, and in the bottom sash rail, the wall of the weather strip channel forms the bottom of the inner channel for the filler strips. The upper sash rail 2 is here shown as having a smooth outer edge of metal and as it is unnecessary that the wooden filler strip should be of a width equal to the width of the rail, we have provided a series of lugs 15 which project into the channel from the inner wall thereof and serve to limit the inward movement of the filler strip, thus enabling a narrow strip to be used. In addition to enabling wood screws to be used for the glass-retaining strips, the wooden filler strips also serve to reinforce the respective sash rails and to prevent the metal from being bent or indented, thereby rendering the sash less liable to be distorted in ordinary service.

It has been found in practice that window openings in steel cars and similar structures are liable to vary slightly in their widths, and inasmuch as the metal sashes are made to standard dimensions, difficulty is sometimes experienced in securing the proper fit between the sash and the window frame. Further, the walls of the window frames which form the guideways for the sash are not always true and this sometimes results in a sash that does not fit properly or is not weather tight. To overcome these difficulties and enable the standard sash to be accurately fitted into the openings designed to receive it, even though these openings may vary slightly in their dimensions, we have made the width of the sash adjustable. To accomplish this, one or both of the vertical sash rails are provided with longitudinal channels along their outer edges and suitable frame engaging members are mounted in these channels. As here shown, the right hand vertical rail, 3, has mounted therein a metal frame engaging member in the form of a bar 17, which extends for substantially the full length of the sash rail and is capable of bodily movement transversely of the rail. To this end it is held within the rail by means of pins 18 extending through the same and through slots 19

in the side members of the rail. The bar is held normally in its outermost position by means of springs 20. In the present instance these springs are curved leaf springs and are placed loosely between the bar 17 and the inner wall of the channel, which is formed by the lugs 9. The longitudinal movement of the springs is limited by inwardly extending lugs or ribs 21, which serve to retain the springs in their proper relative position. The number and character of the springs will depend in a measure upon the character and size of the sash. In the present instance we have employed three springs. It will be obvious that this yieldable frame engaging member will enable the sash to fit snugly within sash openings differing somewhat in width, and always maintain a tight joint between the edge of the sash and the window frame. Further, this bar is preferably of such a character that it will accommodate itself to irregularities in the guideway of the window frame. For this purpose the bar is more or less flexible and it has been found in practice that one part of the bar can be compressed without affecting the positions of the other parts thereof. For example, the central portion of the bar can be bent inwardly a considerable distance while both ends will remain in their original positions. This flexibility, combined with the yieldability of the bar as a whole, enables it to fit snugly within the guideway and to form a tight joint throughout the length of the latter, even though the guideway is not true. If desirable to provide a greater range of adjustability of the sash than that which can be had with the yieldable frame engaging bar 17, this may be accomplished by providing the other vertical sash rail, 4, with an outer channel in which is secured a bar of wood or similar material, 22, which will project beyond the outer edge of the rail and which can be dressed down with a plane or other implement to give the sash the desired width. In the present instance, where it is desired to secure a large range of adjustability we have employed both the yieldable bar and the wooden bar, but it is obvious that either can be used without the other. Further, it will be apparent that both bars fit snugly between the side members of the rails and reinforce the same against bending or denting.

In order to provide the sash with adequate lifts without forming thereon handles which would project in front of the sash a distance sufficient to interfere with the curtain, we have formed the lifts integral with the upper and lower rails, respectively, and to this end have cast in these rails recesses, 23, along the upper edge of which is a projection or lip 24 which extends but a short distance in front of the rail, but which when combined with the top wall of the recess 23 provides a large and ample finger grip.

It will be apparent from the foregoing description that we have provided a metal sash of very simple construction and of a very rigid and durable character, which can be adjusted to accommodate it to variations in the width of the window openings and which will automatically accommodate itself to irregularities in the guideway of the window frame. Further, it will be apparent that the glass-retaining strips may be secured to the sash rail with ordinary wood screws which may be inserted at any desired point along the length of the strip; and further, that the metal parts of the sash are so reinforced that they will not be readily bent or indented; that the weather strip at the lower edge of the sash is secured thereto in such a manner as to effectually prevent displacement and that the lifts are of a relatively large size affording an ample finger hold, but are so built into the sash rail that they project but a short distance beyond the face of the sash.

While we have shown and described one embodiment of our invention, we wish it to be understood that we do not desire to be limited to the details of construction, except as limited by the appended claims, as various modifications will occur to a person skilled in the art.

Having now fully described our invention, what we claim as new, and wish to secure by Letters Patent, is:—

1. In a metal window sash a pair of vertical rails and top and bottom rails rigidly connected one with the other at the respective corners of said sash; each of said rails comprising two substantially parallel rigid members spaced apart and rigidly connected one with the other along a line spaced from the inner edge thereof, thereby forming a channel along the inner edge of said rail; each rail also having one member thereof projecting inwardly beyond the inner edge of the other member of that rail to form a support for a pane of glass; filler strips mounted in said channels and adapted to receive the fastening devices for the glass-retaining strips; the line of connection between the parallel members of one of said vertical rails being also spaced from the outer edge thereof to form a channel along said outer edge, and a frame engaging member mounted in said channel.

2. In a metal window sash, a pair of vertical rails and top and bottom rails rigidly connected to said vertical rails at the respective corners of said sash; each of said rails comprising two substantially parallel rigid members spaced apart and rigidly connected one to the other along a line spaced from the inner edge thereof, thereby forming a channel along the inner edge of said

rail, each rail also having one member thereof projecting inwardly beyond the inner edge of the other member to form a support for a pane of glass; filler strips mounted in said channels and adapted to receive the fastening devices for the glass retaining strips; the connections between the parallel members of said vertical rails being also spaced from the outer edges thereof to form channels along said outer edges of the respective rails, and frame engaging members mounted in the respective outer channels.

3. In a metal window sash, a pair of vertical rails, and top and bottom rails rigidly connected to said vertical rails at the respective corners of said sash; each of said rails being cast in one piece and comprising two substantially parallel rigid members and connecting members arranged between said parallel members and spaced from the inner edge of said rail to form a channel along said inner edge of said rail; each rail having one of said members projecting inwardly beyond the inner edge of the other member to form a support for a pane of glass; filler strips mounted in the respective channels and adapted to receive the fastening devices for the glass retaining strips; the connecting members for the parallel members of the vertical rails being also spaced from the outer edges of said rails to form channels along said outer edges, and frame engaging members mounted in the respective outer channels.

4. In a metal window sash, a pair of vertical rails, and top and bottom rails rigidly connected to said vertical rails at the respective corners of said sash; each of said rails being cast in one piece and comprising two substantially parallel rigid members, and connecting members arranged between said parallel members and spaced from the inner edge of said rail to form a channel along said inner edge of said rail; each rail having one of said members projecting inwardly beyond the inner edge of the other member to form a support for a pane of glass; filler strips mounted in the respective channels and adapted to receive the fastening devices for the glass retaining strips; the connecting members for the parallel members of the vertical rails being also spaced from the outer edges of said rails to form channels along said outer edges, and frame engaging members mounted in the respective outer channels, and said bottom rail having its connecting member so arranged and shaped as to form a restricted channel adapted to receive a weather-strip.

In testimony whereof, we affix our signatures hereto.

JOHN KIRBY, JR.
TERANCE SCULLIN.