July 7, 1942. C. F. SMART 2,288,654

BEARING ALLOY

Filed Oct. 4, 1935

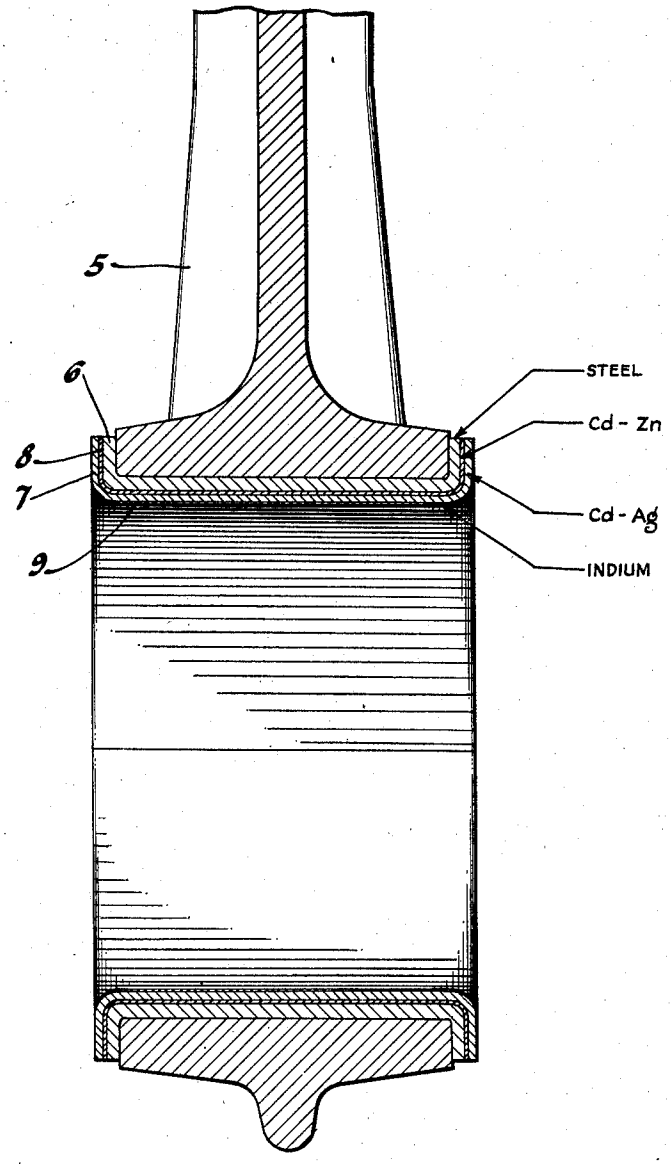

Inventor
Clarence F. Smart

By Blackmore, Spencer & Flint
Attorneys

Patented July 7, 1942 2,288,654

UNITED STATES PATENT OFFICE

2,288,654

BEARING ALLOY

Clarence F. Smart, Pontiac, Mich., assignor to General Motors Corporation, Detroit, Mich., a corporation of Delaware

Application October 4, 1935, Serial No. 43,468

5 Claims. (Cl. 75—151)

The invention relates to bearing and more particularly to those in which cadmium or lead are present. Various alloys of cadmium or lead without tin have been proposed for use in the surface portions of relatively moving parts. Such alloys may include copper-lead (plastic bronze), cadmium-copper, cadmium-nickel, cadmium-silver and various other alloys of two or more metals including cadmium or lead in the absence of tin. I have found, for example, alloys of cadmium and silver to be highly satisfactory for friction surfaces particularly in the presence of small percentages of additional metals, such as nickel, copper or antimony, which form relatively hard inclusions or particles within the ground mass of the alloy.

The proportions of the ingredients of the cadmium-silver alloy are preferably within the approximate limits of 0.5 to 5% silver, 0.25–1% hardening metal and the balance cadmium. More specifically, I prefer the composition silver 1.75–2.50% copper, nickel or antimony, separately or in mixtures, 0.25–0.5%, cadmium 97–98%.

An alloy as described, and other bearing alloys containing a substantial proportion of cadmium or lead are subject, under some conditions, to attack by acids present in, or formed during the use of certain lubricants. Some lubricants or ingredients thereof, such as lard oil, contain organic acids that tend to corrode cadmium and lead. Other lubricants, for example some mineral oil lubricants, when subjected to high temperatures, as 275° F. or higher, in the presence of air tend to oxidize to produce acids which have a similar effect. Long life of bearings containing cadmium or lead may, therefore, be seriously affected by the presence of such acids, particularly under hard service conditions, such as those that occur in automobile engines.

I have found that corrosion by such organic acids may be substantially prevented by the presence in the alloy or upon its surface of small quantities of indium. I contemplate the use of the indium either as a constituent in a substantially homogeneous alloy with the other constituents of the bearing or by applying indium to the surface, for example by electrolytic processes. When applied electrolytically it may be desirable to subject the bearing to heat treatment after deposition of the indium thereon to diffuse the indium into the alloy to some extent. Such heat treatment may be carried out by merely maintaining the bearing, which has been preliminarily coated with metallic indium, at a temperature below the melting point of the bearing alloy but sufficiently high, e. g., 400–500° F. for sufficient time to cause the indium to alloy with the other constituents to the desired extent. The amount of indium required to effect a commercially satisfactory prevention of attack by the acids in question is relatively small. When the indium is introduced into the bearing by formation of a homogeneous alloy, from one-tenth of one percent to one percent is found to be sufficient, the amount varying, of course, with the degree of inhibition desired or the extent to which corrosive acids are present or are produced in the lubricant. Larger amounts might, of course, be employed but the cost of indium renders it desirable to restrict the content to the amount necessary to effect the desired inertness to attack by acids in the lubricating oil. If, however, the indium is applied to the surface portion only of the bearing alloy the amount required will obviously depend upon the extent of absorption of the indium or the depth of its penetration into the bearing alloy.

When the indium is employed as a constituent of a homogeneous bearing alloy its presence has effects similar in some respects to those produced by silver. It is therefore possible to reduce the silver content of cadmium-silver alloys to some extent while still retaining the desirable hardness and toughness imparted otherwise by a larger silver content. The following may be given as an example of a composition which has been found to have satisfactory properties as a bearing alloy and suitable resistance to corrosion by acids resulting from oxidation of mineral oils:

	Per cent
Silver	1–1.25
Copper	0.25
Indium	0.2–0.4

The remainder substantially cadmium.

The alloy given in this example compares favorably in properties with a similar alloy omitting indium and having 2% or more of silver with the advantage for the indium containing alloy of greatly increased resistance to acid.

Alloys containing material amounts of tin, as the usual Babbitt metals, are not liable to attack by the acids occurring in mineral lubricating oils as the tin serves to protect the lead usually present in such alloys. Tin, however, is not used in the so-called "plastic bronze" copper-lead alloys due to the low melting point of the tin-lead eutectic formed, and I have found that tin when added to cadmium in sufficient quantity

to exercise the desired protective effect renders the alloy too brittle for use in bearings.

As an illustration of the application of my invention to bearings I have shown in the accompanying drawing a sectional view of a connecting rod bearing comprising a connecting rod 5, a sleeve 6 of relatively strong metal such as steel or other ferrous metal or alloy or bronze and a facing 7 of an alloy of cadmium and silver bonded to the surface of the sleeve as by an alloy layer 8 containing cadmium and zinc, the facing 7 having a least at the surface a content or coating of indium 9.

It will be understood that the structure illustrated is merely an example of one use of the invention and is not intended as any limitation on the scope of the invention.

While I have set forth herein specific examples of alloys protected against acid attack by the presence of indium, it is not intended to restrict the invention to any specific alloy nor any particular amount of indium. I believe that I am the first to have discovered the protecting or inhibiting effect of indium in preventing corrosion due to the organic acids in lubricating oils and particularly those resulting from oxidation of mineral oils at high temperatures, and it is therefore desired to cover such discovery in broad terms.

I claim:

1. A bearing alloy resistant to attack by acid products in lubricants containing approximately silver 1–1.25%, copper 0.25%, indium 0.3–0.4% and the remainder substantially cadmium.

2. A bearing alloy resistant to acid products in lubricants composed of the following elements in substantially the proportions given:

	Per cent
Silver	.5 –5
Copper	.25–1
Indium	.1 –1
Cadmium	Balance

3. A bearing alloy resistant to acid products in lubricants composed of the following elements in substantially the proportions given:

	Per cent
Silver	.5 to 5
Indium	.1 to 1
Hardener consisting of one of the elements copper, nickel and antimony	.25 to 1
Cadmium	Balance

4. A bearing alloy resistant to attack by acid products in lubricants consisting of:

	Per cent
Silver	.5 to 5
Indium	.1 to 1
Hardener consisting of one of the elements copper, nickel and antimony	.25 to 1

Balance substantially cadmium.

5. A bearing alloy composed of the following elements as essential alloying constituents in substantially the proportions given:

	Per cent
Silver	.5 to 5
Indium	.1 to 1
Cadmium	Balance

CLARENCE F. SMART.