US00D330197S

United States Patent [19]

Kajita

[11] Patent Number: Des. 330,197

[45] Date of Patent: ** Oct. 13, 1992

[54] ELECTRONIC COMPUTER

[75] Inventor: Takashi Kajita, Tokyo, Japan

[73] Assignee: Kabushiki Kaisha Toshiba, Kanagawa, Japan

[**] Term: 14 Years

[21] Appl. No.: 479,587

[22] Filed: Feb. 13, 1990

[30] Foreign Application Priority Data

Aug. 30, 1989 [JP] Japan 1-31312

[52] U.S. Cl. D14/106

[58] Field of Search ..... D14/100, 101, 105, 106, D14/115, 247; D18/1, 7, 11, 12; 340/700, 706, 711, 712; 341/22, 23; 235/145 A, 145 R; 400/493.1, 494, 472, 473, 485; 364/706-709.09, 900; 248/923; 361/394

[56] References Cited

U.S. PATENT DOCUMENTS

D. 224,784	7/1972	Sucre et al.	
D. 243,250	2/1977	Hazama	D18/7
D. 254,005	1/1980	Zadock et al.	
D. 269,529	6/1983	Luen	D19/22
D. 275,102	8/1984	MacConnel	D14/106
D. 280,511	9/1985	Moggridge et al.	D14/106
D. 280,622	9/1985	Moggridge et al.	D14/100
D. 282,843	3/1986	Kurihara et al.	D14/100
D. 283,511	4/1986	Dunn	D14/106
D. 284,193	6/1986	Marshall	D14/101
D. 284,474	7/1986	Sawada	D14/100
D. 284,966	8/1986	Larkins	D14/100
D. 287,969	1/1987	Kusanagi	D14/106
D. 288,566	3/1987	Chin et al.	D14/106
D. 289,177	4/1987	Sawada	D18/7
D. 289,763	5/1987	Fujii et al.	D14/106
D. 290,256	6/1987	Sapper et al.	D14/106
D. 290,609	6/1987	Harian et al.	D14/100
D. 290,845	7/1987	Yubisui et al.	D14/111
D. 291,442	8/1987	Kurihara	D14/106
D. 293,677	1/1988	Hara et al.	D14/106
D. 293,678	1/1988	Sawatani et al.	D14/106
D. 294,029	2/1988	Nishiyama et al.	D14/106
D. 294,831	3/1988	Hara et al.	D14/106
D. 295,176	4/1988	Nishimoto et al.	D14/106
D. 295,519	3/1988	Kimble	D14/106
D. 298,623	11/1988	Yubisui et al.	D14/100
D. 299,031	12/1988	Sugano	D14/106
D. 303,523	9/1989	Shiozawa et al.	D14/106
D. 303,790	10/1989	Kato et al.	D14/106
D. 304,930	12/1989	Hongo et al.	D14/100
D. 305,883	2/1990	Burton	D14/106
D. 306,285	2/1990	Yu	D14/106
D. 306,433	3/1990	Mitchell	D14/106
D. 307,581	5/1990	Ooshima	D14/106
D. 308,050	5/1990	Sugano et al.	D14/106
D. 308,516	6/1990	Takach, Jr. et al.	D14/106
D. 308,860	6/1990	Tsukada et al.	D14/106
D. 308,861	6/1990	Tsukada et al.	D14/106
D. 309,603	7/1990	Mizusugi et al.	D14/106
D. 309,749	8/1990	Ido	D18/7
D. 310,353	9/1990	Sugano et al.	D14/106
D. 310,828	9/1990	Grundstrom et al.	D14/106
D. 311,527	10/1990	Fujii et al.	D14/106
D. 311,906	11/1990	Iino	D14/106
D. 312,822	12/1990	Watabe et al.	D14/106
D. 313,978	1/1991	Miyakuni	D14/106
D. 314,558	2/1991	Iino	D14/106
D. 317,444	6/1991	Mizusugi et al.	D14/106
D. 323,156	1/1992	Nishida	D14/101
D. 324,035	2/1992	Izaki	D14/100
D. 324,036	2/1982	Wakasa	D14/101
4,624,434	11/1986	Lake, Jr. et al.	248/923 X
4,703,160	10/1987	Narashima et al.	235/1 D
5,034,858	7/1991	Kawamoto et al.	361/394

FOREIGN PATENT DOCUMENTS

100708	6/1988	China .
100709	6/1988	China .
101093	7/1988	China .
8800660	10/1988	Fed. Rep. of Germany .
8803410	12/1989	Fed. Rep. of Germany .
8803411	12/1989	Fed. Rep. of Germany .
8908516	7/1990	Fed. Rep. of Germany .
47-14961	5/1972	Japan .
499866	4/1979	Japan .
639216	11/1984	Japan .
650470	5/1985	Japan .
664175	10/1985	Japan .
85300416	5/1986	Japan .
684172	8/1986	Japan .
685000	8/1986	Japan .
685000	12/1986	Japan .
685063	8/1986	Japan .
685121	8/1986	Japan .
685121	10/1988	Japan .

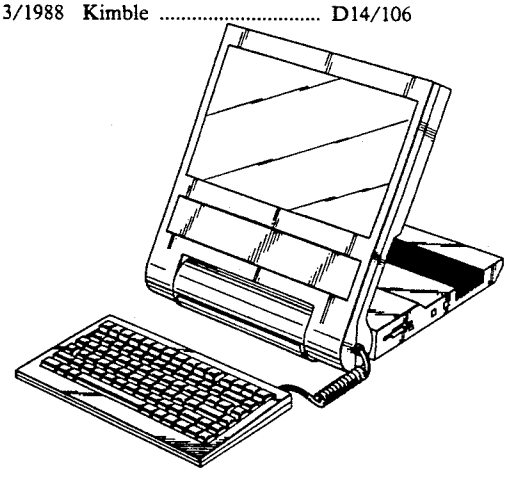

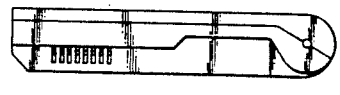

685542 8/1986 Japan .
686374 9/1986 Japan .
686381 9/1986 Japan .
686386 9/1986 Japan .
686654 9/1986 Japan .
686658 9/1986 Japan .
686706 9/1986 Japan .
695931 12/1986 Japan .
696188 1/1987 Japan .
697328 1/1987 Japan .
763838 6/1988 Japan .
747990 11/1988 Japan .
747991 11/1988 Japan .
748513 11/1988 Japan .
749802 11/1988 Japan .
746985(1) 4/1989 Japan .
746985(2) 4/1989 Japan .
761927 5/1989 Japan .
761927(1) 2/1990 Japan .
761927(2) 5/1990 Japan .
761927(3) 5/1990 Japan .
761927(4) 6/1990 Japan .
763840 6/1989 Japan .
763855 6/1989 Japan .
67297 2/1987 Rep. of Korea .
85031 10/1988 Rep. of Korea .
85032 10/1988 Rep. of Korea .
92859 7/1989 Rep. of Korea .
92863 7/1989 Rep. of Korea .
94470 9/1989 Rep. of Korea .
97355 12/1989 Rep. of Korea .
100917 4/1990 Rep. of Korea .
852546 1/1987 Sweden .
852547 1/1987 Sweden .
105573 11/1988 Taiwan .
107394 1/1989 Taiwan .

OTHER PUBLICATIONS

Chaplet HALIKAN LA-22, Apr. 21, 1989.
Sharp AX286L, Sep. 29, 1988.
NEC PC-9801 LX5C, Aug. 23, 1988.
Sharp Advertisement, May 19, 1976.
Fanuc System P-Model, Jul. 27, 1983.
Moebel Interior Design, Jan. 5, 1984.
The Office 98-6, Jan. 31, 1984.
Demus 645, Feb. 22, 1984.
MRD Advertisement, Mar. 29, 1984.
Gavilan Mobile Computer Brochure, Apr. 19, 1984.
Picture #J9016870, May 8, 1984.
Hewlett Packard Advertisement, May 18, 1984.
Hewlett Packard Advertisement, Jun. 5, 1984.
Epson HC-88, Jul. 1, 1984.
Hitachi Advertisement, Sep. 4, 1984.
Hewlett Packard Advertisement, Sep. 12, 1984.
Sharp PC-5000 Brochure, Sep. 26, 1984.
Data General One Advertisement, Sep. 28, 1984.
Apple Computer Apple IIC, Oct. 15, 1984.
TI Software Journal, Pro-Lite TM , Nov. 14, 1984.
IS-11c Advertisement, Nov. 14, 1984.
Dulmont Magnum Article in Portable Computer, Nov. 1984.
IBM Advertisement, Dec. 6, 1984.
Tandy 200, 1985.
General Corp., 4400, Jan. 14, 1985.
AVAL TM Advertisement, Feb. 11, 1985.
Picture #J60007802, Feb. 26, 1985.
AVAL TM20, Mar. 8, 1985.
Tandy 200, Mar. 16, 1985.
NEC Starlet PC-8401A Brochure, Mar. 28, 1985.
C & D News, Mar. 29, 1985.
Hewlett-Packard HP110, Apr. 1985.
Fujitsu FM 16, Apr. 17, 1985.
Fujitsu FM16, TL Brochure, May 22, 1985.
Data General One Brochure, May 23, 1985.
Toshiba T 1100 Plus, Jul. 22, 1985.
Minato Electronics MODS-5000, Aug. 22, 1985.
GridCase Brochure, Sep. 24, 1985.
FBS Advertisement, Oct. 30, 1985.
NEC N6919 Model 80/80H, Nov. 11, 1985.
IBM Advertisement, Nov. 28, 1985.
Apple Computer IIC, Dec. 1985.
Hewlett-Packard Portable Plus, Dec. 1985.
FLM-700, Jan. 31, 1986.
Fujitsu FM 16, May 21, 1986.
PC-816F Advertisement, May 27, 1986.
Zenith Data Systems NEWSDATE Newsletter, Jun.-Jul., 1986.
Tandy 600 Advertisement, Jul. 25, 1986.
Ricoh JP70D Brochure, Sep. 29, 1986.
Data General One Brochure, Oct. 3, 1986.
Article re IBM Portable Personal Computer, Oct. 15, 1986.
NEC PC-98LT Advertisement, Oct. 23, 1986.
Yaskawa P-t50 Advertisement, Nov. 12, 1986.

Yaskawa Memocon ®-SC GL20 Advertisement, Mar. 27, 1987.
TI Advertisement in Telephony, Apr. 1, 1987.
Data General One Model 2J Brochure, May 20, 1987.
Hitachi B16LX Brochure, Aug. 31, 1987.
Ricoh Brochure, Sep. 17, 1987.
Sony Produce 100 Brochure, Sep. 18, 1987.
Panasonic FW-U1EX Advertisement, Oct. 2, 1987.
Nihon IBM 55 Model 5535, Oct. 19, 1987.
NEC Minitel 5 Advertisement, Oct. 29, 1987.
Rein Laptop 300 SLC Advertisement, Oct. 29, 1987.
IBM 5540/5535 Brochure, Nov. 4, 1987.
NEC PC-9800 Advertisement, Nov. 27, 1987.
Panasonic U1EX Advertisement, Dec. 8, 1987.
Schneider Multivision 300 SLC Catalog, 1988.
Panasonic U1Pro, Jan. 4, 1988.
Diagnostic Products Review, Jan. 2, 1988.
Toshiba E & E News, Feb. 26, 1988.
Seiko-Epson PC-286L, Mar. 2, 1988.
Toshiba JW90FII Rupo Brochure, Mar. 3, 1988.
Hitachi B16LX Brochure, Apr. 5, 1988.
Sony Produce PJ-100EX Brochure, Apr. 5, 1988.
WS Japanese Advertisement, Apr. 27, 1988.
NEC Multispeed, Spring '88.
Samsung S5200, May 10, 1988.
Datavue Snap 1+1, May 10, 1988.
Portable Computer Review, p. 32, May 10, 1988.
GridCase 1530 Advertisement, May 10, 1988.
NEC Multispeed EL Model 2 Brochure, May 10, 1988.
Sharp PC-5000 Brochure, May 12, 1988.
Japanese Advertisement, May 12, 1988.
Sanyo ES 100, May 13, 1988.
NEC PC-9801 LV 21 Brochure, May 13, 1988.
Sharp WV-500, May 19, 1988.
Panafacom C-250 LT Brochure, May 19, 1988.
Sony Produce 100EX Advertisement, May 19, 1988.
Panasonic Panacom 6000 LT Brochure, Jun. 7, 1988.
NEC Mini 5 Carryword Brochure, Jun. 27, 1988.
Ricoh JP90LX Brochure, Jun. 28, 1988.
NEC Mini 5 HL Brochure, Jun. 30, 1988.
NEC PC-98 LT Brochure, Jul. 14, 1988.
Kyosera 386AX, Sep. 1988.
NEC PC-9801, Oct. 26, 1988.
Sanyo MBC-17LTJ, Oct. 1988.
Toshiba T 1600, Nov. 1988.
Sanyo MBC 17LTJH, Nov. 28, 1988.
Oki "IF 386 AX", Dec. 9, 1988.
Kyosera 386-SX Laptop AX, Jan. 10, 1989.
Seiko-Epson PC-286LS, Feb. 16, 1989.
NEC PC-9801 LV21, May 13, 1989.
Fujitsu G-150LT, May 19, 1989.
Visual Computer Brochure.
Gavilan Mobile Computer Brochure.
Olivetti Personal Computer M15 Brochure.
Epson HC-88, HC80 Brochure.
Epson PX-8 Personal Computer Brochure.
Mitsubishi mp286L Laptop Personal Computer Brochure.
Grid Brochure.
Dauphin Laptop Computer Brochure.
MicroDIRECT Brochure.
SuperSport Brochure.
Panasonic KX-D4930 Advertisement.
Ampere WS-1 Advertisement.
NEC Contrast.
NEC Starlet PC-8401A Advertisement.
Victor Technologies, V 286 P Catalog.

Primary Examiner—Wallace R. Burke
Assistant Examiner—Freda S. Nunn

[57] **CLAIM**

The ornamental design for an electronic computer, as shown and described.

DESCRIPTION

FIG. **1** is a top front and right side perspective view of an electronic computer showing my new design in the opened position;
FIG. **2** is a front elevational view thereof; in the closed position;
FIG. **3** is a rear elevational view thereof;
FIG. **4** is a top plan view thereof;
FIG. **5** is a bottom plan view thereof;
FIG. **6** is a right side elevational view thereof;
FIG. **7** is a left side elevational view thereof;
FIG. **8** is a front elevational view thereof in the opened position;
FIG. **9** is a rear elevational view thereof;
FIG. **10** is a top plan view thereof;
FIG. **11** is a bottom plan view thereof;
FIG. **12** is a right side elevational view thereof; and,
FIG. **13** is an enlarged right side sectional view thereof taken along line **13—13** of FIG. **2**, the internal mechanism being omitted.

FIG.1

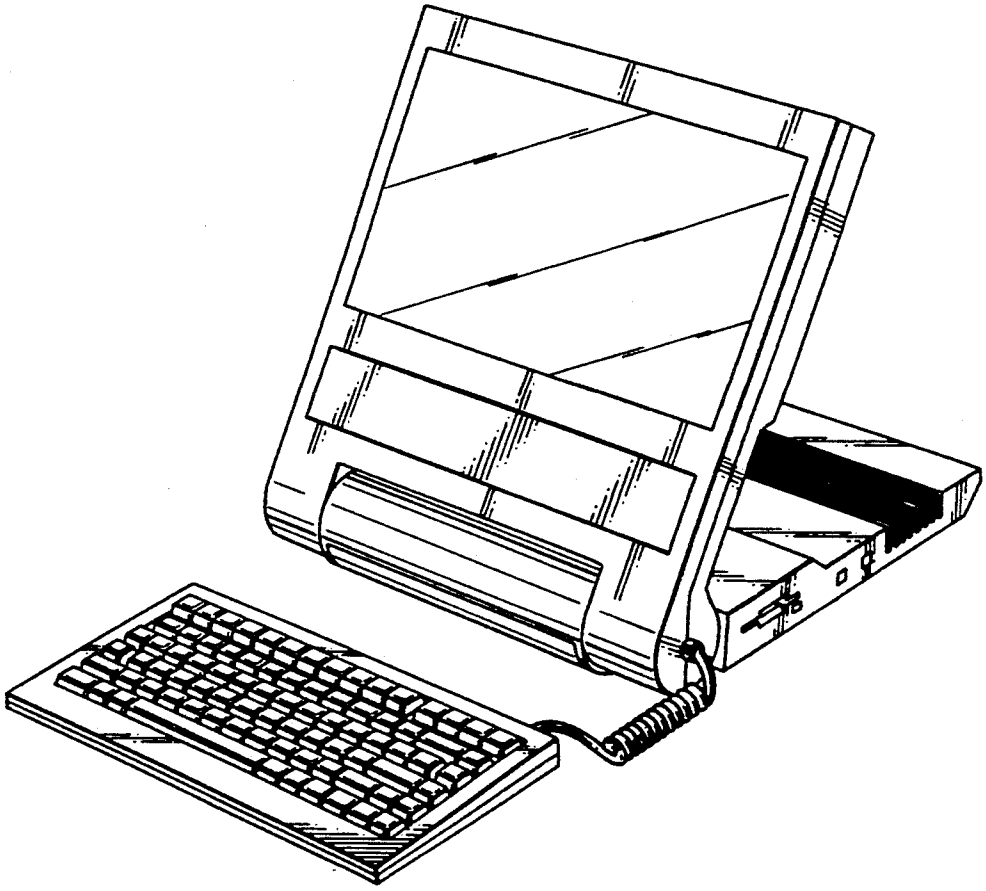

FIG.2

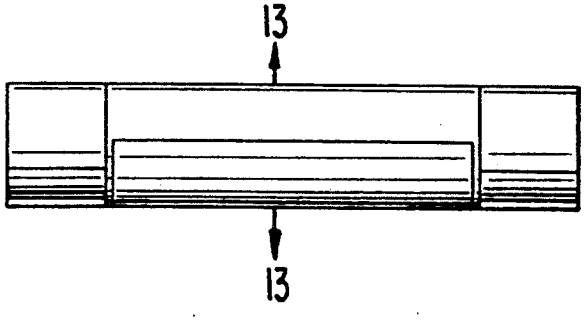

FIG.3

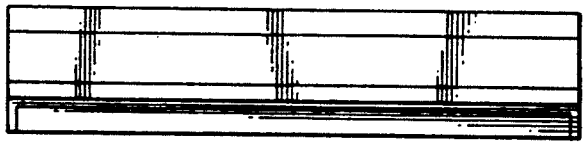

FIG.4

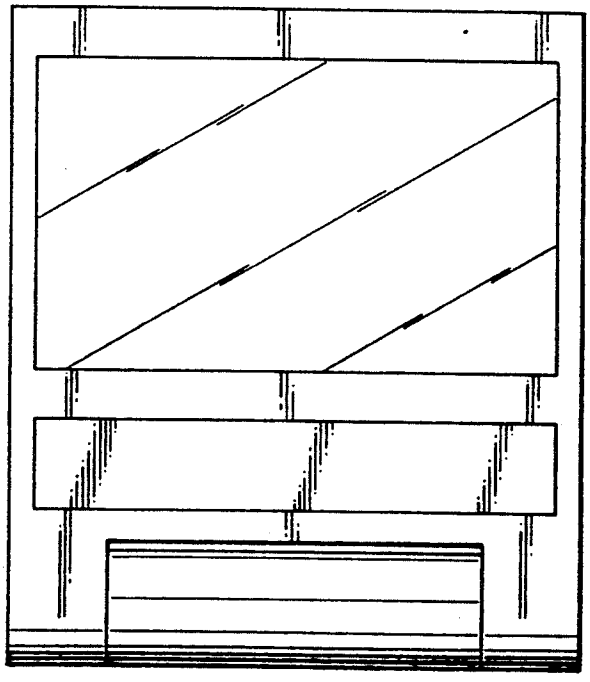

FIG.5

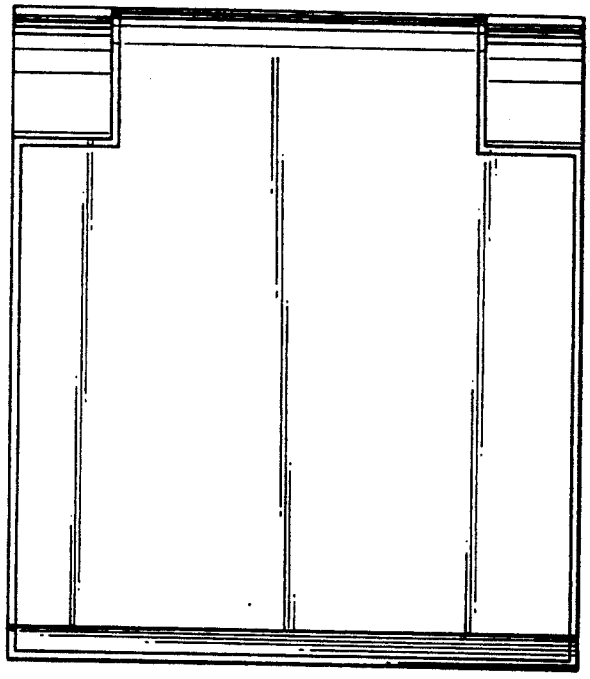

FIG.6

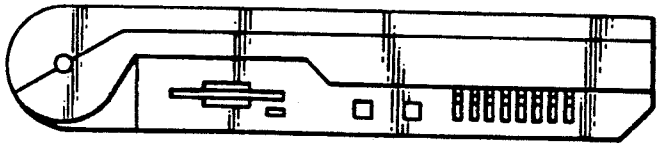

FIG.7

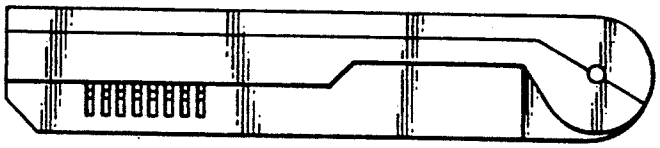

FIG.8

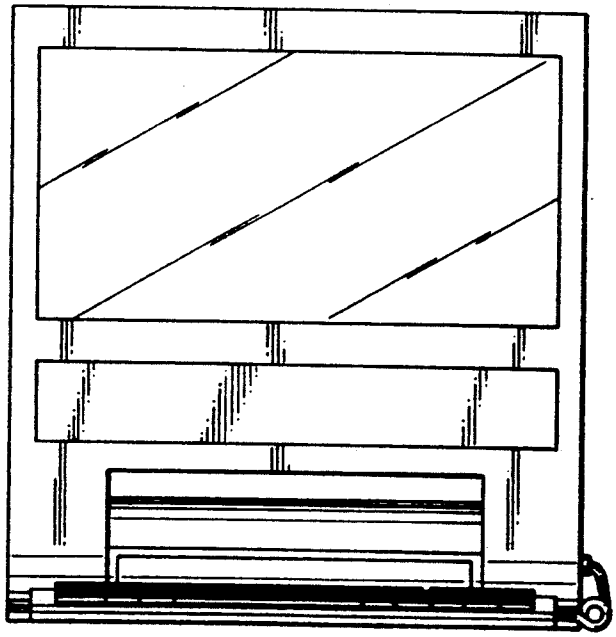

FIG.9

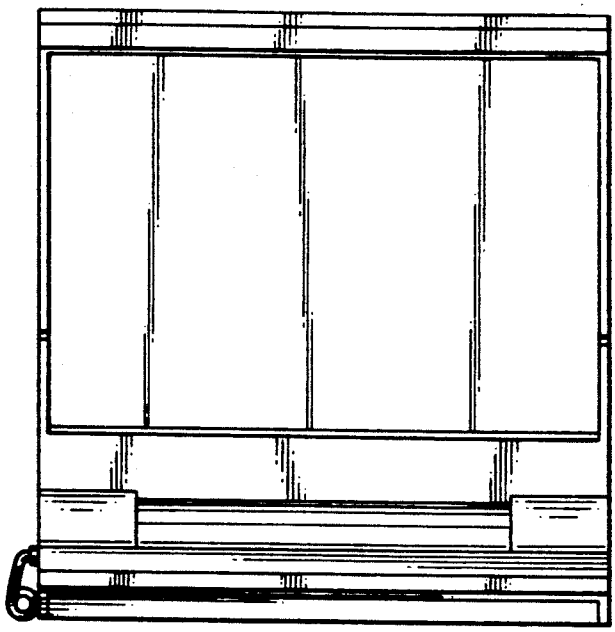

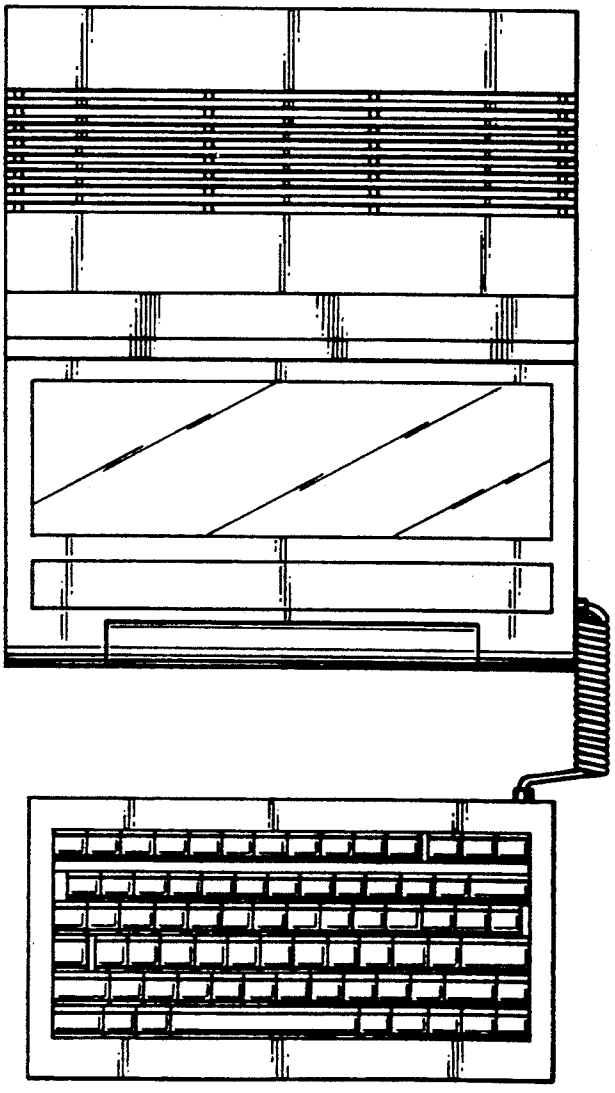

FIG.10

FIG.11

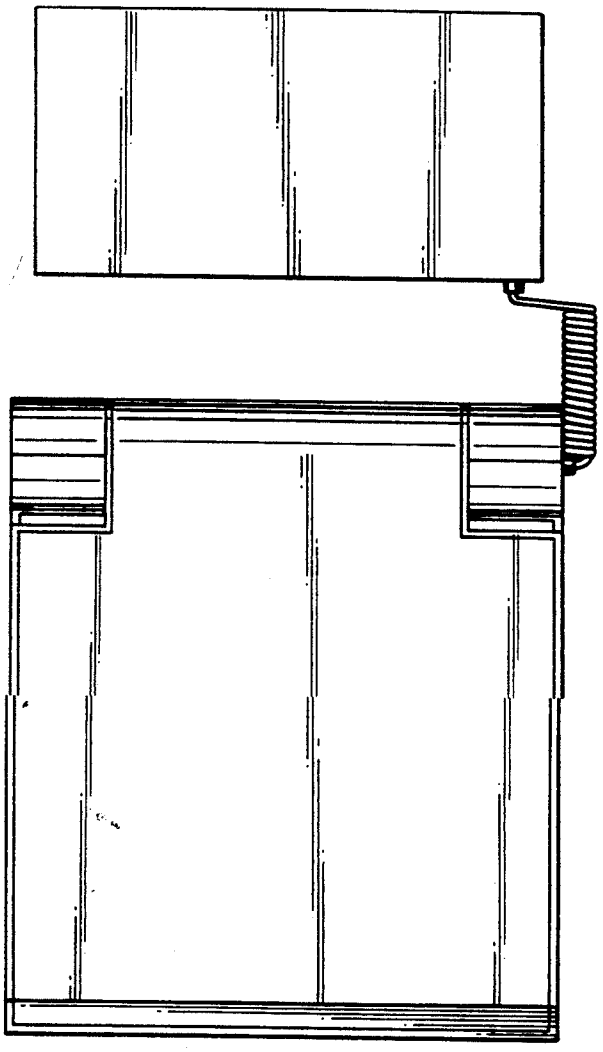

FIG.12

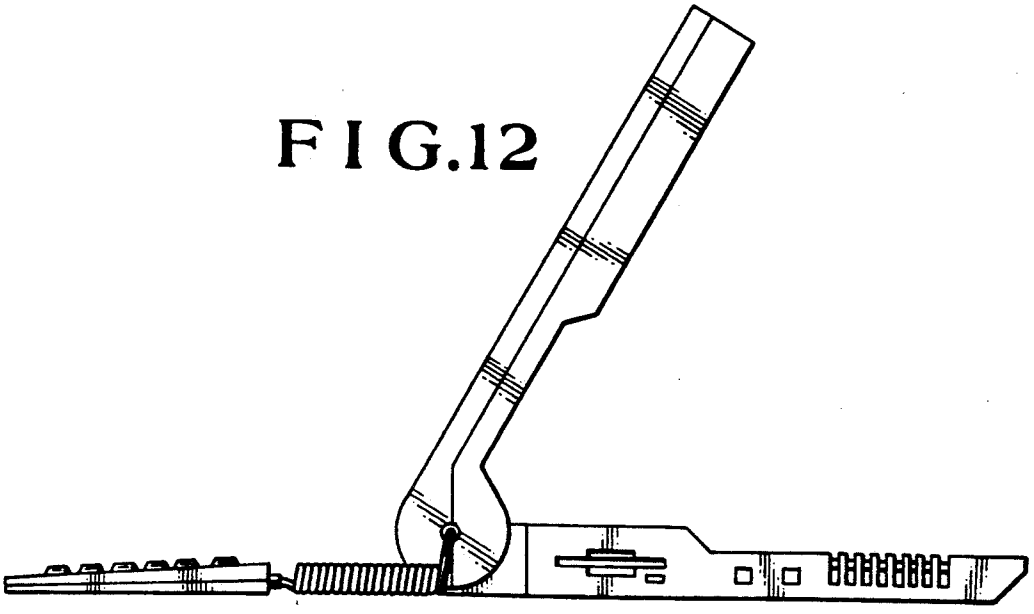

FIG.13

