W. H. BUNDY.

TIME RECORDER.

APPLICATION FILED MAR. 2, 1908. RENEWED DEC. 5, 1910.

1,082,008. Patented Dec. 23, 1913.

5 SHEETS—SHEET 1.

Fig. 1.

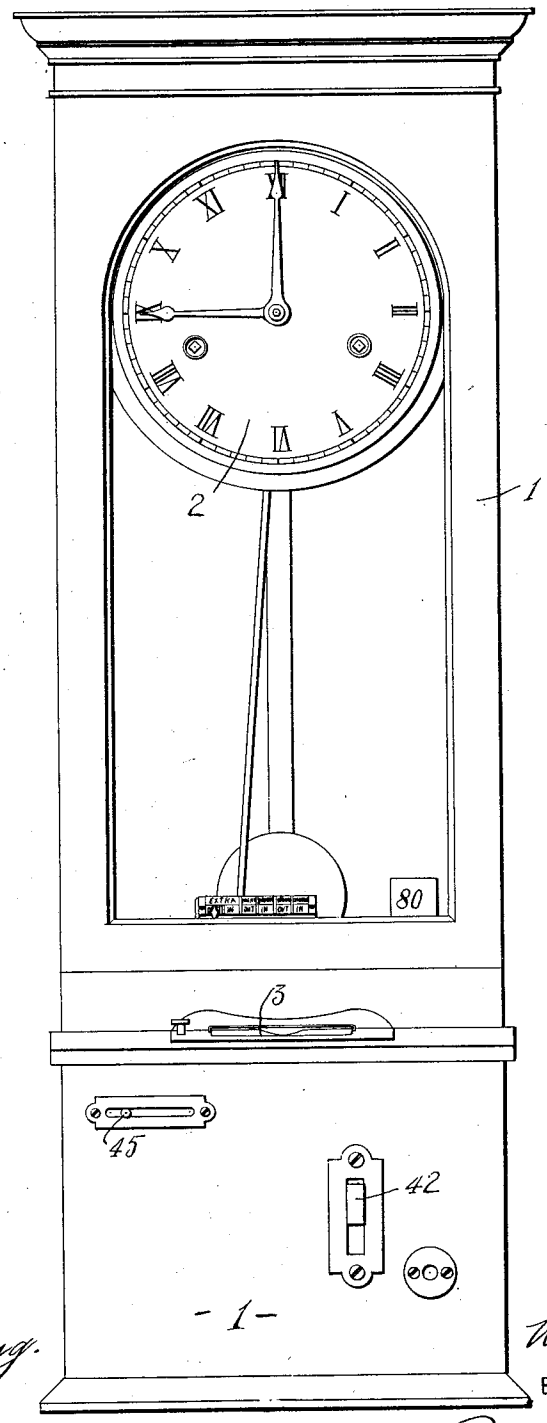

WITNESSES:

Chas. H. Young.

S. Davis.

INVENTOR

Willard H. Bundy

BY

Parsons Hall & Brickett

ATTORNEYS

- 1 -

W. H. BUNDY.

TIME RECORDER.

APPLICATION FILED MAR. 2, 1908. RENEWED DEC. 5, 1910.

1,082,008. Patented Dec. 23, 1913.

5 SHEETS—SHEET 2.

Fig. 2

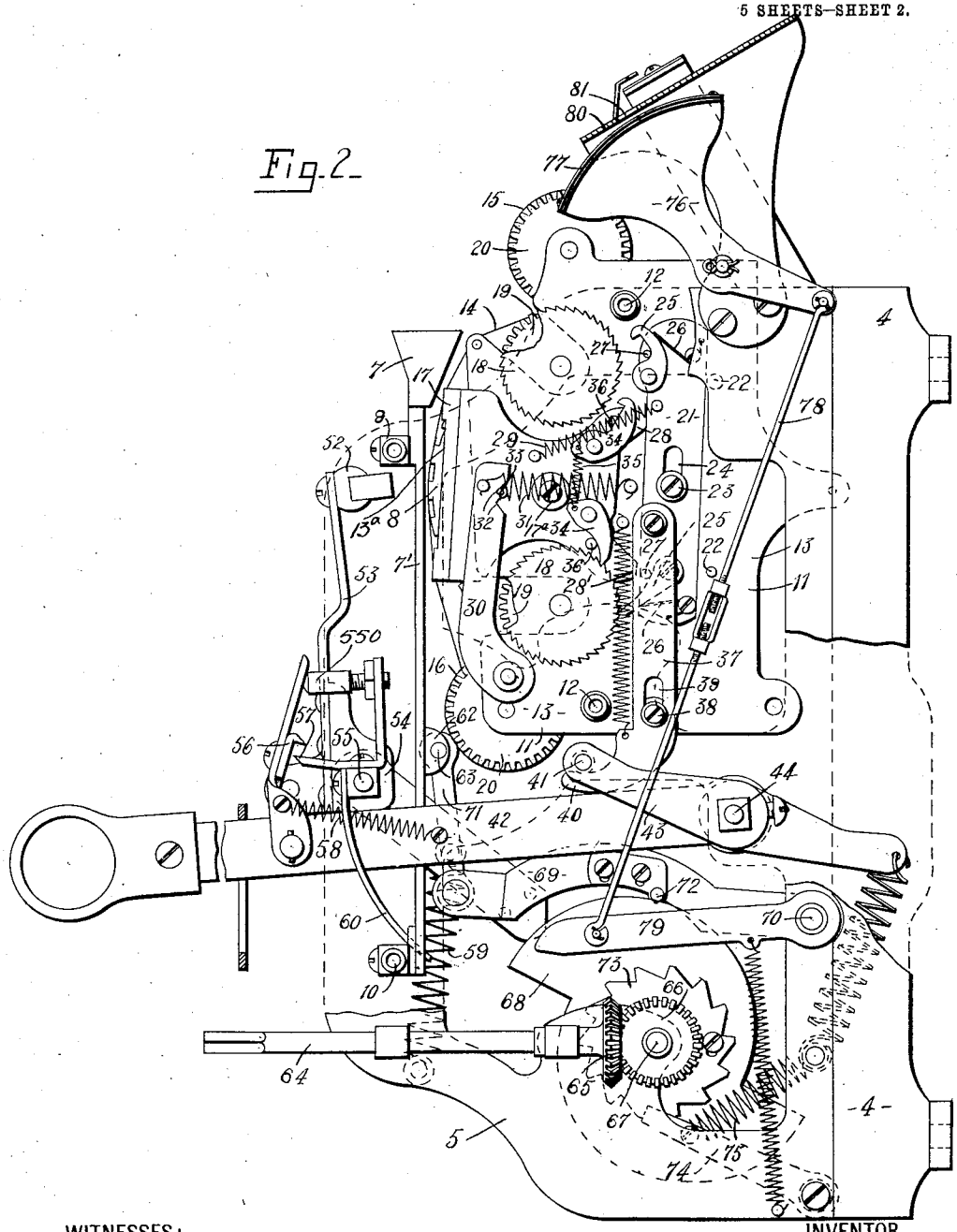

WITNESSES:

Chas. H. Young.

S. Davis.

INVENTOR

Willard H. Bundy

BY

Parsons Hall & Bodell

ATTORNEYS

W. H. BUNDY.

TIME RECORDER.

APPLICATION FILED MAR. 2, 1908. RENEWED DEC. 5, 1910.

1,082,008.

Patented Dec. 23, 1913.

5 SHEETS—SHEET 3.

Fig. 3.

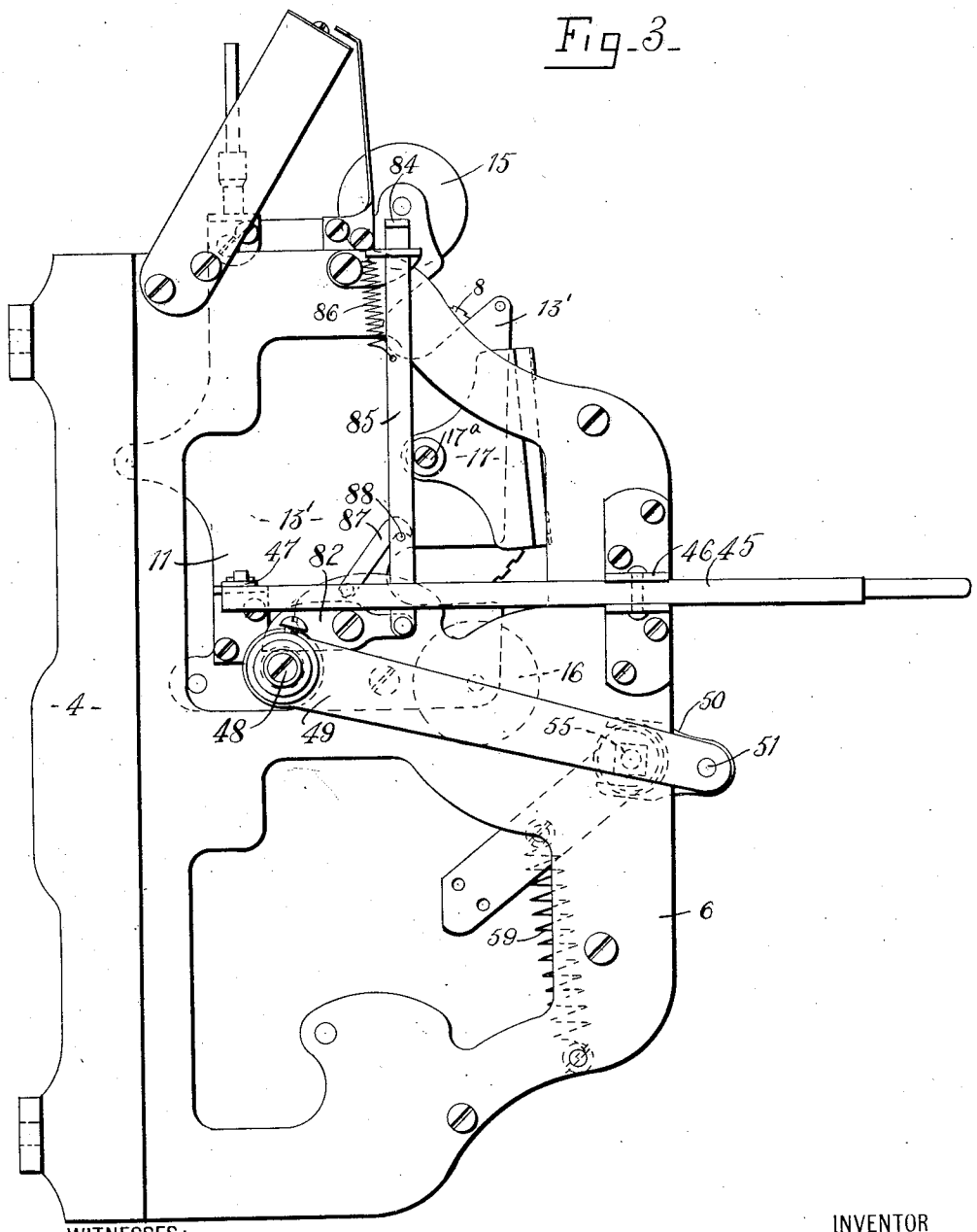

WITNESSES:

Chas. H. Young,

S. Davis,

INVENTOR

Willard H. Bundy

BY

Parsons, Hall & Bodell

ATTORNEYS

W. H. BUNDY.

TIME RECORDER.

APPLICATION FILED MAR. 2, 1908. RENEWED DEC. 5, 1910.

1,082,008.

Patented Dec. 23, 1913.

5 SHEETS—SHEET 4.

Fig. 4.

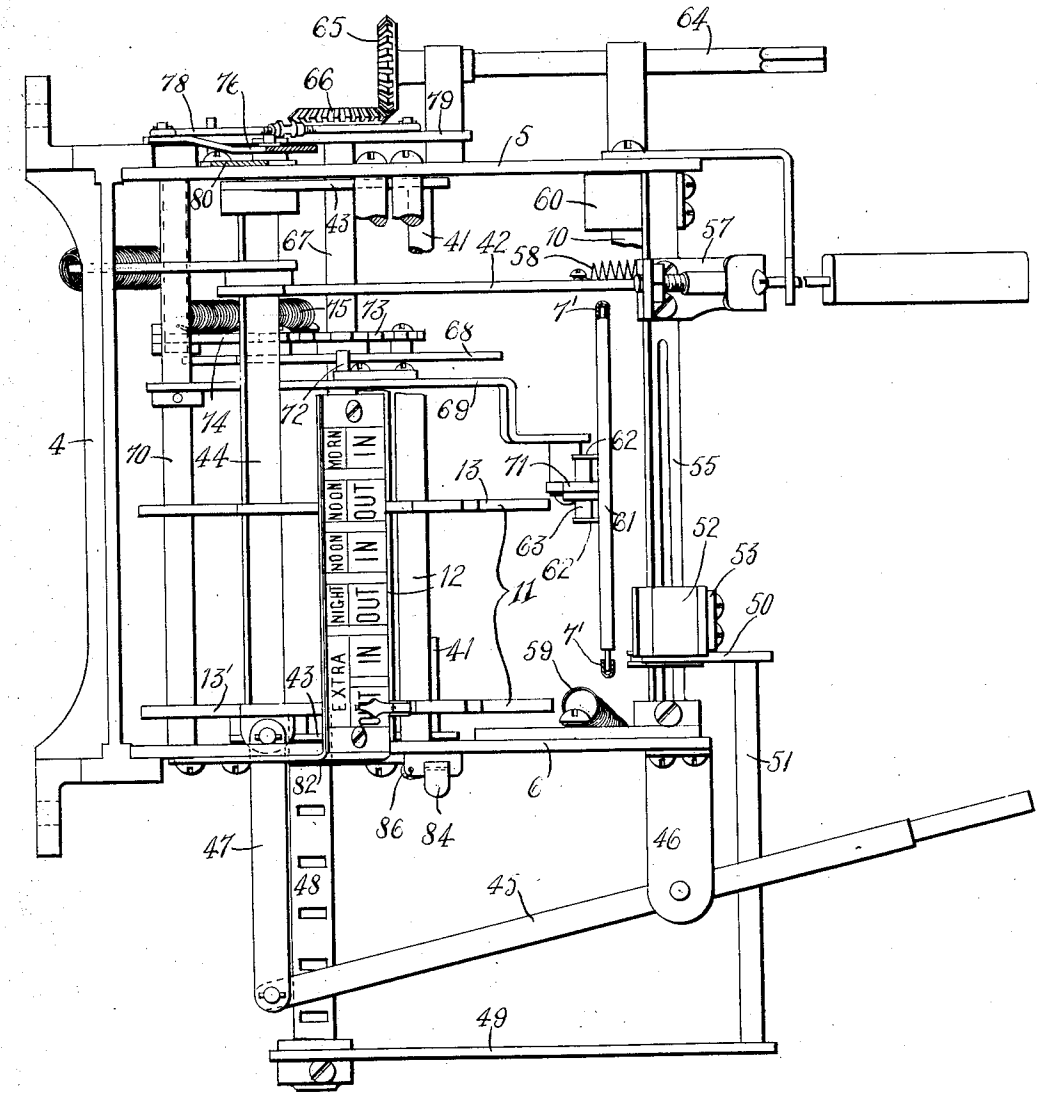

WITNESSES:

Chas. H. Young.

S. Davis.

INVENTOR

Willard H. Bundy

BY

Parsons Hall & Bodell

ATTORNEYS

W. H. BUNDY.

TIME RECORDER.

APPLICATION FILED MAR. 2, 1908. RENEWED DEC. 5, 1910.

1,082,008. Patented Dec. 23, 1913.

5 SHEETS—SHEET 5.

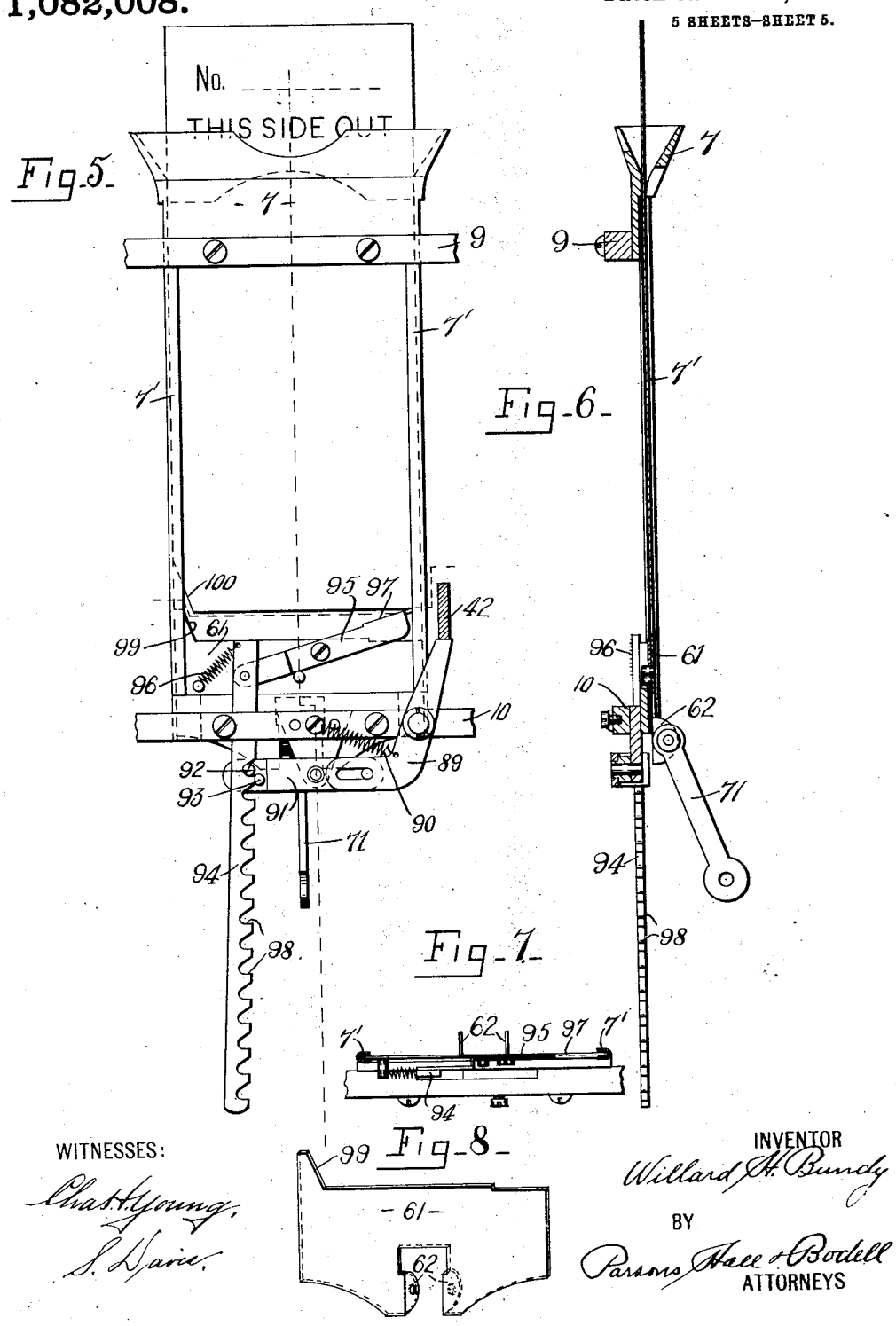

WITNESSES:

Chas. H. Young,

S. Daire.

INVENTOR

Willard H. Bundy

BY

Parsons Hall & Bodell

ATTORNEYS

UNITED STATES PATENT OFFICE.

WILLARD H. BUNDY, OF SYRACUSE, NEW YORK, ASSIGNOR TO W. H. BUNDY RECORDING COMPANY, OF SYRACUSE, NEW YORK, A CORPORATION OF NEW YORK.

TIME-RECORDER.

1,082,008. Specification of Letters Patent. Patented Dec. 23, 1913.

Application filed March 2, 1908, Serial No. 418,700. Renewed December 5, 1910. Serial No. 595,738.

To all whom it may concern:

Be it known that I, WILLARD H. BUNDY, of Syracuse, in the county of Onondaga and State of New York, have invented a certain new and useful Time-Recorder, of which the following is a specification.

My invention relates to workmen's time recorders, and the object thereof is to provide a machine which is particularly simple and durable in construction and highly efficient in use.

The invention includes the combination and arrangement of parts to be hereinafter described and particularly pointed out in the claims.

In the accompanying drawings which illustrate one exemplification of my invention; Figure 1 is a front elevation of the complete machine. Fig. 2 is a side elevation of the frame and parts carried thereby which are located in the lower part of the inclosing casing. Fig. 3 is an elevation of the side of the frame opposite to that illustrated in Fig. 2. Fig. 4 is a detail plan view, and Figs. 5, 6, 7 and 8 are detail views of the card-receiver and associated mechanism.

The machine includes, generally, an upright casing, a time movement in the upper part thereof, marking or printing mechanism in the lower part of the casing, which mechanism includes movable members operated from the time movement, a card-receiver in coöperative relation with the marking mechanism and having its upper end exposed through an opening in the lower part of the casing, means for shifting the marking or printing mechanism relatively to the card-guide or for shifting the latter relatively to the working mechanism for printing on the card in a plurality of vertical rows, or for effecting "In" and "Out" registrations, an abutment movable in the receiver for determining the position of the card placed therein relatively to the printing or marking point, a shaft movable at the will of the operator in a continuous direction by a series of impulses of substantially equal extent, and mechanism operated by said shaft for moving the abutment through a cycle comprising a plurality of short advancing steps, and a single reverse step equal in extent to all of the advancing steps of the cycle.

The machine further includes means for preventing accidental movement of the printing or marking mechanism relatively to the card-guide, and means for preventing a marking operation except when the card to be marked is placed in the correct position within the card-receiver.

In the accompanying drawings the inclosing case of the recorder is designated 1, the time mechanism in the upper part thereof 2, and the slot 3 in the case for the mouth of the card-guide or receiver. A suitable light metallic frame 4, secured in the lower part of the case 1 and including side plates 5 and 6, carries a card-guide or receiver 7, and marking, or printing mechanism, and associated parts to be hereinafter described in detail. The card-receiver 7, preferably comprises a light frame open through its front and rear faces to permit of the printing mechanism coöperating with the card held therein, and as illustrated this frame includes two vertically arranged strips 7′ spaced apart from each other and of substantially U-shape in cross-section. The upper end of the guide is provided with a flaring or funnel-shaped mouth-piece which is exposed through the opening 3 in the casing 1. As illustrated herein the card-guide is supported by means of two bars 9, 10, extending between and secured in the side plates 5, 6.

The marking or printing mechanism includes wheels having peripheral printing characters denoting divisions of time, a ribbon and ribbon mechanism, and a suitable hammer or platen. The marking wheels and ribbon are located on one side of the card-guide or receiver, and the hammer upon the opposite side thereof, and the card when inserted into the receiver is, consequently, interposed between the hammer and the other parts of the marking or printing mechanism. Upon operating the hammer it is thrown into contact with the rear face of the card in the receiver and forces the front face of the card against the registering characters on the marking wheels, with the printing ribbon interposed. In the illustrated exemplification of my invention the marking wheels 8 and the operating mechanism therefor, driven from the time movement, are mounted in the frame 11 slidably supported on rods 12 rigidly held in the frame 4, said frame 11 including parallel side plates 13 and 13′. The inking ribbon

is designated 14 and is guided and fed by mechanism mounted upon the frame 11, and constructed and arranged to hold the ribbon with its lengthwise edge parallel to the edges of the marking wheels and parallel to the direction of movement of the card in inserting and withdrawing the same from the receiver. As illustrated herein the marking wheels are so mounted relatively to the card-guide that the periphery of said wheels or the printing characters thereon, when at the printing point, are in a vertical plane in close juxtaposition to the plane of the rear face of the receiver 7, or face of the card held therein, and there is consequently very little space which may be occupied by the ribbon between said characters and the card-guide. A ribbon mechanism which holds the ribbon in the position before described, and feeds the same in the plane of movement of the marking wheels and card rather than at right angles to such movements, has marked advantages, inasmuch as in the latter construction the edge of the ribbon not infrequently interferes with the advancing edge of the card as the latter is being moved down into the receiver, and not infrequently the printing characters catch the selvage edge of the ribbon, especially when the latter is frayed, and thus the proper operation of the parts is seriously interfered with, all of which objections are avoided by my construction.

As illustrated herein, the ribbon 14 is carried by two spools 15 and 16 mounted, respectively, in the upper and lower parts of the frame 11, and the intermediate part of the ribbon is preferably guided by a ribbon-guide 17 to be hereinafter described in detail.

The illustrated mechanism for feeding the ribbon includes a ratchet-wheel 18, and companion gear wheels 19 and 20 associated with each spool, the said wheels 20 being rigidly secured to their respective spools. The ribbon-guide is preferably of substantially U-shape, the sides thereof being respectively pivoted and secured to the sides 13 and 13′ of the frame 11 and the intermediate portion thereof extending between said sides 13 and 13′ at the front of the frame 11 and being provided with an opening 13ᵃ in register with the marking wheels, and with suitable transverse guiding slots above and below said opening. A vertically movable and pivoted bar 21 is secured to the plate 13 between the adjacent side of the ribbon-guide, and stops 22 fixed in the plate 13, and is connected thereto by a pivot pin 23 which passes through a slot 24 in the intermediate part of the bar. A feeding pawl 25 is secured to each end of the bar 21, these pawls coacting with the adjacent ratchet-wheels 18, each pawl being under tension of a spring 26 and being arrested when at the limit of its movement in one direction by an associated stop 27 fixed in the bar 21. The ribbon-guide has a rocking movement on its pivot 17ᵃ and when shifted in one direction a nose 28 thereon forces the upper end of the bar 21 backwardly against the tension of a spring 29 and thus carries the upper pawl 25 out of engagement with the upper ratchet-wheel 18, and at the same time the lower end of the bar is moved toward the lower ratchet-wheel so as to engage the lower pawl 25 therewith. The movement of the ribbon-guide in an opposite direction brings a nose 28′ against the bar 21 at a point below its pivot and shifts the lower end of the bar 21 outwardly and its upper end back to initial position. The ribbon-guide is yieldingly restrained from movement by a pivoted arm 30 under tension of a spring 31, and provided with notches 32 designed to separately engage a pin 33 on the guide. The ribbon-guide is automatically shifted in reverse directions alternately by shoulders adjacent to opposite ends of the ribbon which respectively contact with the upper and lower edges of the ribbon-guide as the respective ends of the ribbon reach the guide in the feed of the ribbon. A detent 34, carried by the ribbon-guide, is associated with each ratchet-wheel 18 and is forced toward engaging position by a spring 35, and is arrested at one end of its path of movement by a stop 36 individual thereto. When the ribbon-guide is moved in a direction to disengage one of the feeding pawls 25 from one of the ratchet-wheels 18 the detent 34 associated therewith is also freed and the detent and pawl of the other ratchet-wheel are simultaneously engaged with the other ratchet-wheel 18. The bar 21 is reciprocated to effect the feeding of the ribbon by a link 37 connected at its upper end to the bar 21, guided intermediate of its length by a pin 38 working in the slot 39, and provided at its lower end with a nose 40 which projects beneath a rod 41 which is depressed each time a lever 42, to be hereinafter described in detail, is operated to effect a printing operation. The rod 41 is carried by arms 43 secured to a rock-shaft 44 upon which the lever 42 is mounted.

In the machine illustrated, the entire printing or marking mechanism is movable transversely of the card-guide for printing on the cards in a plurality of vertical rows, or to effect "In" and "Out" registrations. To obtain this movement the printing or marking mechanism is slidably mounted in the frame 4 and is connected to a lever 45 pivoted in a bracket 46 and having one end extending through the casing 1 and adapted to be grasped by the operator. The mechanism which is interposed between the lever 45 and the marking mechanism for

shifting the latter as said lever is shifted preferably includes a link 47 directly interposed between the rear end of the lever 45 and the side plate 13′ of the frame 11, a rigid bar 48 extending laterally from the plate 13′, an arm 49 extending forwardly from the outer end of the bar 48, a yoke 50 engaging a recessed hub or collar integral with the pivoted end of the hammer, and a connecting bar 51 between the yoke 50 and the outer end of the arm 49. The hammer as herein illustrated comprises a head 52, a yielding body portion 53, and an end 54 having a non-circular opening extending therethrough which receives a non-circular rocking shaft 55 upon which the hammer is mounted, this shaft being mounted in the sides 5, 6 of the frame 4. The lever 42 for operating the hammer is secured at its rear end to the rocking bar 44 mounted in the sides 5, 6, and its intermediate portion has pivoted thereto a catch 56 designed to engage a shoulder 57 on the shaft 55, the catch being normally drawn into engaging position by a spring 58, and being engaged by a stop 550 carried by the shaft 55. Upon depressing the lever 42 the shaft 55 is rocked against the tension of a spring 59 until the catch 56 rides off the shoulder 57, whereupon the spring 59 violently rocks the shaft 55 in a reverse direction until arrested by a spring plate 60, fixed at one end to said shaft, and striking against a suitable stop which, as herein illustrated, consists of the lower bar 10 for supporting the card-guide 7. The spring-plate 60 normally holds the head of the hammer in advance of the card-guide, but when the parts are operated as before described, the momentum acquired by the parts is sufficient to cause the plate 60 to yield sufficiently to permit the head of the hammer to strike the printing blow. As will be understood, the card-receiver 7 may be arranged to move transversely of the frame 4 and of the marking mechanism rather than as in the illustrated embodiment of my invention in which the card-guide 7 is fixed and the marking mechanism is transversely movable.

The abutment associated with the card-receiver is designated 61 and is adapted to have a cyclical movement and to occupy a plurality of stations in moving through said cycle corresponding in number to the number of divisions of time represented by the successive horizontal rows of registrations intended to be marked upon the cards employed with the machine. As herein shown the abutment comprises a flat sheet metal plate having a wide flat bearing surface at its upper edge, and ears 62 struck out laterally from its lower edge in which is secured a pivot pin 63. The side edges of the abutment are movable within the U-shaped sides of the card-receiver and are of sufficient extent, or length, to avoid any liability of the abutment becoming twisted in the receiver, or becoming disalined. As hereinbefore premised, mechanism is provided operated by a manually-operated and controlled shaft which is intended to be given successive movements of the same extent and in the same direction, for moving the abutment through its cycle. This shaft is designated 64 in the accompanying drawings, and is illustrated as a key-shaft having its front end, which is designed to receive an operating key, exposed through an opening in the front of the casing. The shaft 64 is rotatably mounted in lugs projecting from the side 5 of the frame 4 and the rear end thereof carries a bevel pinion 65 which intermeshes with a companion bevel pinion 66 carried by a shaft 67 to which is fixed a double cam 68 controlling a lever 69 which in turn controls the abutment. The lever 69, at its rear end is fixed to a shaft 70 journaled in the sides 5, 6, its front end is coupled by a link 71 to the pin 63 carried by the abutment and its intermediate portion is preferably provided with a laterally extending pin 72 which rides upon the periphery of the cam 68. The cam is held against rearward rotation by a suitable ratchet-wheel and detent. As shown herein the ratchet-wheel 73 is fixed to the side of the cam and the detent 74 is pivoted in the frame 4 and is yieldingly held in engagement with the ratchet by a spring 75.

As will be appreciated, the described mechanism interposed between the key-shaft and the abutment is such that as the shaft is given a series of successive turns or impulses in the same direction of substantially equal extent, the abutment will be given a series of advancing steps in one direction and a single step in a reverse direction equal in extent to all of the advancing steps, one step being imparted to the abutment for each impulse given to the key-shaft.

To denote to the person who is called upon to set the abutment through the key-shaft 64 what position said abutment occupies in reference to certain divisions of time, an indicator is preferably provided movable in synchronism with the abutment. The indicator illustrated herein includes a pivoted lever 76 carrying a chart 77 at one end and having its opposite end connected by a link 78 to an arm 79 fixed to an end of the rocking shaft 70. The chart 77 is covered by a plate 80 having a single sight opening 81 therein of a size to expose but a single one of the words or other characters used on the chart to indicate the divisions of time. If the abutment is arranged to complete a cycle of movements in a week

and is designed to occupy a new position each day, the chart will be provided with a row of names or characters denoting the several days of the week, and each of these will be brought into registration with the sight opening as the abutment is moved to the station in its cycle corresponding to that particular day of the week.

Means are preferably embodied in the machine for preventing the accidental transverse movement of the transversely movable part of the marking mechanism. The illustrated means includes a pivoted latch 82 designed to enter one of a series of notches in the bar 48, said notches corresponding in number and relative arrangement to the number and relative arrangement of the transverse positions designed to be occupied by the marking mechanism, and a finger-piece 84 for operating the latch. The finger-piece preferably comprises a laterally bent end of a link 85 which is connected at one end to the latch and is under tension of a spring 86 which tends to force the latch 82 into locking position. To hold this mechanism entirely out of operation a catch 87 is provided which coacts with a pin 88 on the link 85. The machine also preferably embodies means to prevent the actuation of the marking mechanism except when the card is placed in the receiver and forced down to its full extent therein and for preventing such actuation excepting when the card is properly faced in the receiver. This mechanism includes a pivoted locking lever 89 having an end normally held beneath the lever 42 by a spring 90 and an opposite end connected by a pin and slot connection to one end of a lever 91. The opposite end of the lever 91 is provided with a pair of pins 92 and 93 which coact with a link 94 which is pivotally connected near its upper end to a latch-piece 95 pivotally connected to the abutment 61 adjacent the upper edge of the same. The link 94 is under tension of a spring 96 which tends to normally hold one end of the latch-piece 95 slightly in advance of the edge of the abutment 61, this end of the latch-piece being provided with a laterally extending stop portion 97. The link 94 is provided with a series of shoulders or ratchet-teeth 98 which are designed to coact with the shoulder pins 92 and 93. Upon a card being placed in the receiver and pressed down to the full extent therein the end 97 of the latch 95 will be pressed down and said latch will lift the link 94 and thereby tilt the lever 91 which will rock the lever 89 to move the upper end thereof out of the path of movement of the lever 42. The teeth 98 of the link 94 interengage with the pin 92 for shifting the lever 91, but the extent of this engagement is so limited by the pin 93 that the teeth can ratchet by the pin 92 as the abutment is advanced. The upper edge of the abutment at one side thereof is provided with a projecting part 99 which prevents a card having a square corner from being pressed down a sufficient distance into the receiver to operate the latch 95. The cards intended to be used with this machine have one corner clipped as indicated at 100, and when this clipped corner is brought into registration with the projection 99, the card may be inserted the full depth of the receiver and will then trip the latch. This arrangement insures the cards being placed in the receiver right face about for the reason that should they be placed wrong face about the printing mechanism cannot be released.

What I claim is:—

1. In a workman's individual car time recorder and in combination, a casing, time mechanism in the casing, a frame in the casing, marking mechanism mounted in the frame and including type wheels movable in synchronism with the time movement, a card guide, a card abutment, means for shifting the abutment comprising a cam, an indicator for showing positions of the card abutment occupied during the different days of the week, the indicator including a movable member, connections operated by the cam for actuating the indicator member, and a key shaft for actuating the cam, the shaft having an end exposed through the casing, substantially as and for the purpose described.

2. In a workman's individual card time-recorder and in combination, a casing, time mechanism in the upper part of the casing, a frame in the lower part of the casing, marking mechanism mounted in the frame and including character-carrying wheels movable in synchronism with the time mechanism, a card-guide, a plate slidably mounted in the side walls of said guide and constituting a card abutment, and means for moving the abutment in a double cycle, said means comprising a key-shaft mounted in the frame and having an end exposed through the casing, a cam-shaft journaled in said frame, a double cam carried by said shaft, a lever controlled by said cam, a link connection between the lever and the abutment, and beveled gearing interposed between the key-shaft and said cam-shaft, substantially as and for the purpose described.

3. In a workman's card time-recorder, marking mechanism, means for actuating the same, a card guide, an abutment comprising a sheet metal plate guided in the side walls of the card guide, said plate having a relatively wide upper edge and ears struck out of the lower part thereof, and means for shifting the abutment including a part pivoted between the ears, substantially as and for the purpose specified.

4. In a workman's individual card time-recorder, marking mechanism, means for actuating the same, a card-guide, an abutment comprising a sheet-metal plate guided in the side walls of the card-guide, said plate having a relatively wide upper edge and ears struck out of the lower part thereof, a pin secured in said ears, a link connected at one end to said pin, a lever connected at one end to the other end of said link, a key-shaft, and means for operating the lever from said key-shaft, substantially as and for the purpose set forth.

5. In a workman's card time-recorder and in combination, an inclosing casing, time mechanism in the casing, a card receiver, marking mechanism including a part arranged in the rear of the receiver and a part in advance thereof, the first-named part including type wheels movable in synchronism with the time mechanism, a frame carrying the marking mechanism and the receiver, and a lever pivoted to the frame between its ends and having one end extending through the casing and its other end connected to the frame for the marking mechanism, substantially as and for the purpose described.

6. In a workman's individual card time-recorder and in combination, an inclosing casing, time mechanism in the upper part thereof, a card-receiver, marking mechanism including a part arranged in the rear of the receiver, and a part in advance thereof, the first-named part including marking wheels movable in synchronism with the time mechanism, a frame carrying the marking mechanism and the receiver, a lever pivoted to said frame having one end extending through the casing, the opposite end of the lever being connected to the first-named part of the marking mechanism for shifting the same transversely of the card-receiver, and a frame extending from said first-named part to the second-named part of the marking mechanism for moving the latter transversely simultaneously with the movement of said first part, substantially as and for the purpose specified.

7. In a workman's card time-recorder and in combination, an inclosing casing, time mechanism in the casing, a card guide or receiver, marking mechanism including a part arranged in the rear of the card receiver and a part in advance thereof, the first-named part including type wheels movable in synchronism with the time mechanism, and ribbon mechanism, a frame carrying the marking mechanism and the receiver, guides for the first-named part of the marking mechanism supported by the frame, a rocking shaft journaled in the frame parallel to the guides, and the second-named part of the mechanism including a hammer mounted on the rocking shaft and slidable along the same during the shifting of the first-named part, means for shifting the marking mechanism transversely of the card receiver and means for rocking said shaft, substantially as and for the purpose set forth.

8. In a workman's individual card time-recorder and in combination, an inclosing casing, time mechanism in the upper part thereof, a card-guide or receiver, marking mechanism including a part arranged in the rear of the card-receiver and a part arranged in advance thereof, the first-named part including marking wheels movable in synchronism with the time mechanism, and a ribbon, and ribbon mechanism, a frame carrying the marking mechanism and receiver, said frame including side plates, fixed guides for the first-named part of the marking mechanism supported in the frame, a rocking shaft journaled in the frame and providing a guide for the second-named part of the marking mechanism, means for moving the marking mechanism transversely of the card-receiver, including a lever pivoted to one side of said frame, a connection between the same and the part of the marking mechanism arranged in the rear of the card-receiver, and means extending from the last-named part of the marking mechanism around one of the sides of said frame and connected to the part of the marking mechanism in front of the card-receiver, and means for moving the last-named part of the marking mechanism in a direction at an angle to said transverse movement, substantially as and for the purpose described.

9. In a workman's individual card time recorder, and in combination, two elements, one a card guide and the other marking mechanism, one of said elements being shiftable transversely relatively to the other, means for shifting said transversely movable element including a member extending in a direction transversely thereof, and means for preventing accidental movement of the former means and for arresting the same in several predetermined positions to be occupied thereby, the latter means including a latch coöperating with said laterally extending member, substantially as and for the purpose set forth.

10. In a workman's individual card time recorder, and in combination, two elements, one a card guide and the other a marking mechanism, one of said elements being shiftable transversely relatively to the other, an inclosing case having an opening through which the mouth of the card guide projects, means for moving said transversely shiftable element including a member extending in a direction transversely of said element, and means for preventing accidental movement of the shiftable ele-

ment and for arresting the same in several predetermined positions, including a part coacting with said laterally extending member, and a manually operable part extending through the casing, substantially as and for the purpose described.

11. In a workman's individual card time recorder, and in combination, two elements, one a card guide and the other a marking mechanism, one of said elements being shiftable transversely relatively to the other, an inclosing case having an opening through which the mouth of the card guide projects, means for moving said transversely shiftable element including a member extending in a direction transversely of said element, and means for preventing accidental movement of the shiftable element and for arresting the same in several predetermined positions, including a part coacting with said laterally extending member, and a manually operable part extending through the casing, the outer end of said part being located near the mouth of the card guide, substantially as and for the purpose specified.

12. In a workman's individual card time recorder, and in combination, two elements, one a card guide and the other a marking mechanism, one of said elements being movable transversely relatively to the other, an inclosing case having an opening through which the mouth of the card guide projects, means for moving said transversely shiftable element including a member extending in a direction transversely of said element, means for preventing accidental movement of the shiftable element and for arresting the same in several predetermined positions, including a part coacting with said laterally extending member, and a manually operable part extending through the casing, and means for holding the last-mentioned means out of its operative position, substantially as and for the purpose set forth.

13. In a workman's individual card time-recorder and in combination, two elements, one a card-guide and the other marking mechanism, one of said parts being movable transversely in reference to the other, means for moving said transversely movable part including a member extending in a direction transversely thereof, and means for preventing accidental movement of said part and for arresting the same at the several predetermined positions to be occupied thereby including a latch coöperating with said laterally extending member, substantially as and for the purpose described.

14. In a workman's individual card time-recorder and in combination, two elements, one a card-guide and the other marking mechanism, one of said parts being movable transversely in reference to the other, means for moving said transversely movable part including a member extending in a direction transversely thereof, and means for preventing accidental movement of said part and for arresting the same at the several predetermined positions to be occupied thereby, said means including notches arranged in the laterally extending member, a latch coöperating with the notches, and means for actuating the latch, substantially as and for the purpose set forth.

15. In a workman's time-recorder and in combination, two elements, one a card-guide and the other a marking mechanism, one of said parts being movable transversely relatively to the other, means for moving the transversely movable part including a member extending in a direction transversely thereof, and means for preventing accidental movement of said part and for arresting the same at a predetermined position to be occupied thereby, the arresting means including a latch coöperating with said transversely extending member, and means for holding the latch in inoperative position, substantially as and for the purpose described.

16. In a workman's individual card time-recorder and in combination, two elements, one a card-guide and the other marking mechanism, one of said parts being movable transversely in reference to the other, means for moving said transversely movable part including a member extending in a direction transversely thereof, and means for preventing accidental movement of said part and for arresting the same at the several predetermined positions to be occupied thereby, said means including notches in the laterally extending member, a latch pivoted intermediate of its length and adapted to have one of its ends coact with said notches, a finger-piece, a part extending from the finger-piece and pivotally connected to the other end of the latch, and a spring tending to normally hold the latch in locking position, substantially as and for the purpose specified.

17. In a workman's individual card time-recorder and in combination, two elements, one a card-guide and the other marking mechanism, one of said parts being movable transversely in reference to the other, means for moving said transversely movable part including a member extending in a direction transversely thereof, means for preventing accidental movement of said part and for arresting the same at the several predetermined positions to be occupied thereby, said means including notches in the laterally extending member, a latch pivoted intermediate of its length and adapted to have one of its ends coact with said notches, a finger-piece, a part extending from the finger-piece and pivotally connected to the other end of the latch, and a spring tending

to normally hold the latch in locking position, and means for holding the latch in inoperative position, substantially as and for the purpose described.

18. In a workman's individual card time-recorder and in combination, two elements, one a card-guide and the other marking mechanism, one of said parts being movable transversely in reference to the other, means for moving said transversely movable part including a member extending in a direction transversely thereof, means for preventing accidental movement of said part and for arresting the same at the several predetermined positions to be occupied thereby, said means including notches in the laterally extending member, a latch pivoted intermediate of its length and adapted to have one of its ends enter said notches, a finger-piece, a part extending from the finger-piece and pivotally connected to the other end of the latch, and a spring coacting with said part and tending to normally hold the latch in locking position, and means for holding the latch in inoperative position, said means comprising a hook and a coacting pin on the link, substantially as and for the purpose set forth.

19. In a workman's individual card time-recorder and in combination, marking mechanism, a card-receiver, an abutment slidably mounted in the card-receiver, a hand-operated shaft, means interposed between said shaft and the abutment and actuated from the shaft for moving the abutment in a cycle comprising a series of advancing steps and a reverse step, said means including a pivoted lever and a rock-shaft carrying the same, and means for indicating the position of the abutment comprising a pivoted lever, a chart at one end thereof, an arm secured to said rock-shaft, a connection between the latter arm and the opposite end of the pivoted lever, and a cover for the chart having a sight opening therein, substantially as and for the purpose specified.

20. In a workman's individual card time recorder, marking mechanism, a card receiver, a movable abutment for the card, means for actuating the abutment, an operating element for effecting the marking of the card, a movable stop member normally arranged in the path of said element, an actuating member for the stop member, the actuating member being arranged in the path of the card and being movable with the card abutment as the abutment is shifted in the card receiver, and power-transmitting means between the actuating member and the stop member, substantially as and for the purpose specified.

21. In a workman's individual card time recorder, marking mechanism, a card receiver, a movable abutment for the card, means for actuating the abutment, an operating element for effecting the marking of the card, a movable stop member normally arranged in the path of said element, an actuating member for the stop member, the actuating member being arranged in the path of the card and being movable with the card abutment as the abutment is shifted in the card receiver, and power-transmitting connections between the actuating member and the stop member, the power-transmitting connections including parts automatically shiftable to adjust the connections to the change of position of the actuating member, substantially as and for the purpose set forth.

22. In a workman's individual card time-recorder, marking mechanism, a card-receiver, a movable abutment for the card, means for actuating the abutment, an operating element for effecting the marking of the card, a movable stop member normally arranged in the path of said element, an actuating member for said stop member arranged in the path of the card, said actuating member being carried by the abutment and movable relatively thereto, and power-transmitting connections between said members, substantially as and for the purpose described.

23. In a workman's individual card time-recorder, marking mechanism, a card-receiver, a movable abutment for the card, means for actuating the abutment, an operating element for effecting the marking of the card, a movable stop member normally arranged in the path of said element, an actuating member for said stop member arranged in the path of the card, said actuating member being pivoted to the abutment, and power-transmitting means connecting said members, substantially as and for the purpose set forth.

24. In a workman's individual card time-recorder, marking mechanism, a card-receiver, a movable abutment for the card, means for actuating the abutment, an operating element for effecting the marking of the card, a movable stop member normally arranged in the path of said element, an actuating member for said stop member arranged in the path of the card, and carried by the abutment, and power-transmitting means connecting said members, comprising a part having a series of shoulders, a lever connected to the stop member and having a shoulder associated therewith and coacting with said series of shoulders on said part, means tending to hold the shoulder in engaging position, and means for limiting the said engagement, substantially as and for the purpose specified.

25. In a workman's individual card time-recorder, marking mechanism, a card-receiver, a movable abutment for the card, means for actuating the abutment, an op-

erating element for effecting the marking of the card, a movable stop member normally arranged in the path of said element, an actuating member arranged in the path of the card to receive motion therefrom, and movable with the abutment, a link connected to the actuating member and provided with a series of shoulders or ratchet-teeth, a lever pivoted intermediate of its ends and having one end connected to the stop member, a pair of shoulders disposed at the other end of the lever, one of said shoulders coöperating with the series of shoulders on said link or the upper surfaces of the ratchet-teeth thereof, and the other shoulder on the lever coöperating with the surfaces of the teeth arranged at an angle to the first-named surfaces of the teeth, substantially as and for the purpose described.

26. In a workman's individual card time-recorder, marking mechanism, a card-receiver, a movable abutment for the card, means for actuating the abutment, an actuating member on the abutment, an operating element for effecting the marking of the card, a projection carried by the abutment for preventing a card having a non-registering recess from moving into engagement with said actuating member, and locking means for said operating element, said locking means being released upon said actuating member being shifted by the card, substantially as and for the purpose set forth.

In testimony whereof, I have hereunto signed my name in the presence of two attesting witnesses, at Syracuse, in the county of Onondaga, in the State of New York, this 25th day of February, 1908.

WILLARD H. BUNDY.

Witnesses:
S. Davis,
E. K. Seemiller.