Dec. 7, 1965 J. B. GORMLEY 3,222,451

IMPLEMENT SUPPORTING DEVICE WITH A STANDARD SUPPORTED IMPLEMENT

Filed April 23, 1963 3 Sheets-Sheet 1

Fig. 1.

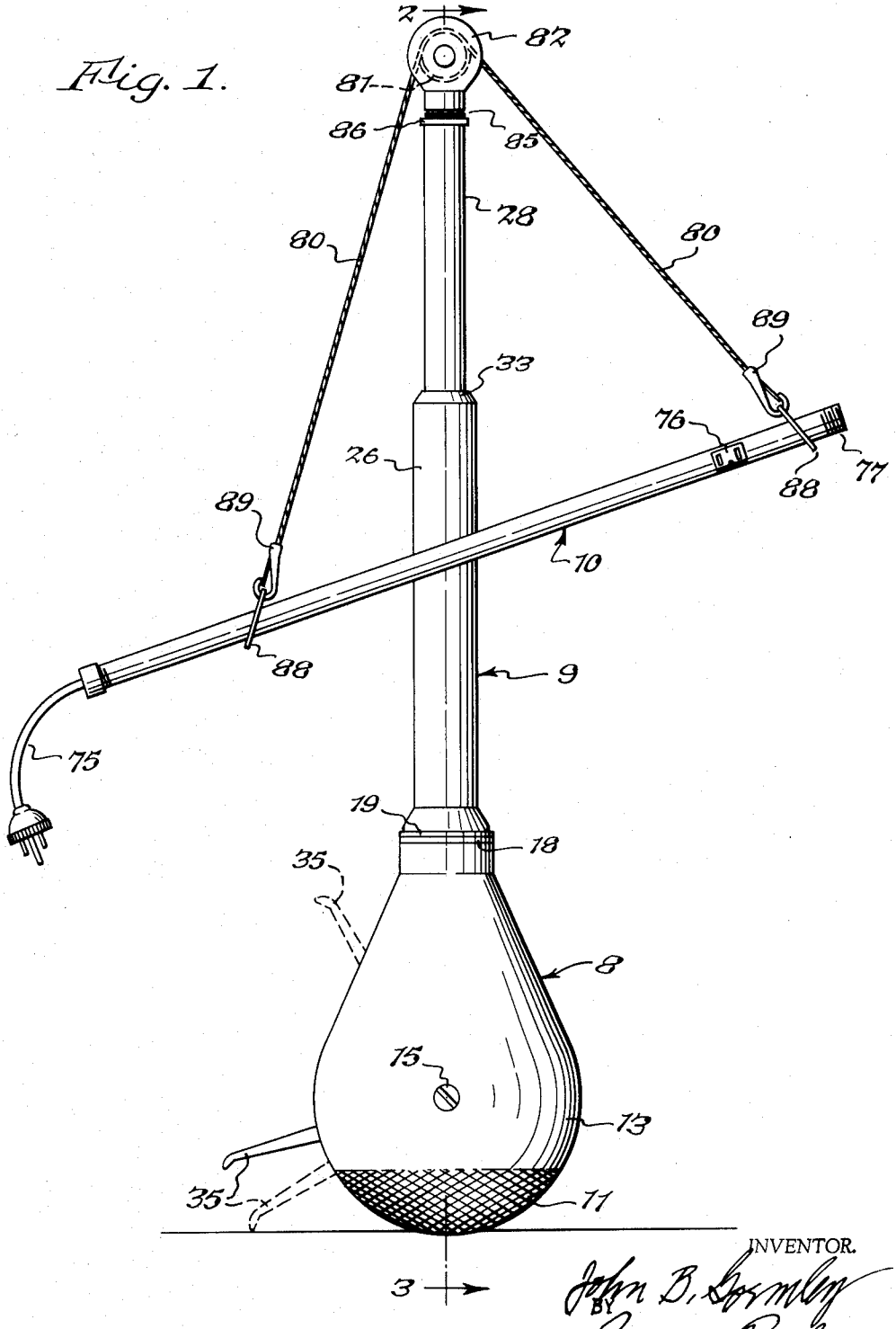

INVENTOR.

John B. Gormley

BY

Parker & Rodman

ATTORNEYS.

Dec. 7, 1965 J. B. GORMLEY 3,222,451

IMPLEMENT SUPPORTING DEVICE WITH A STANDARD SUPPORTED IMPLEMENT

Filed April 23, 1963 3 Sheets-Sheet 2

Fig. 2.

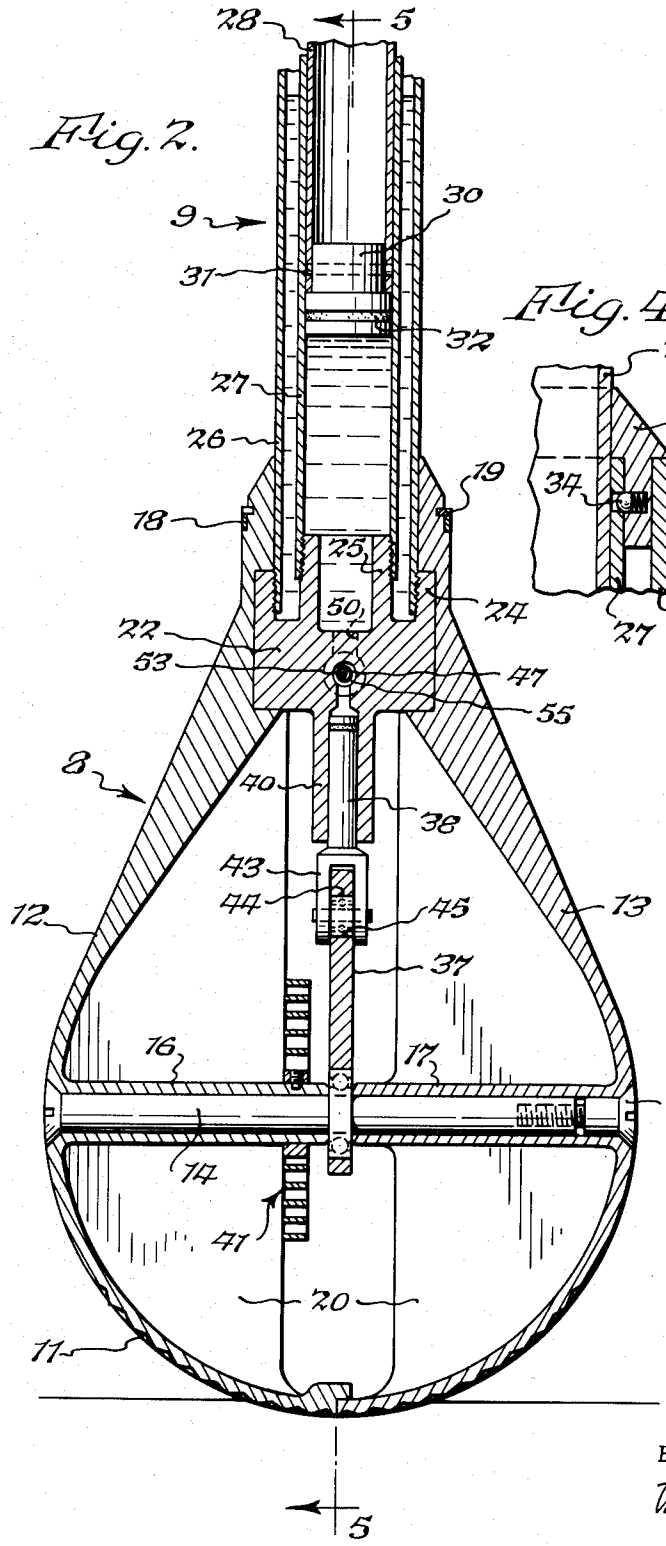

Fig. 4.

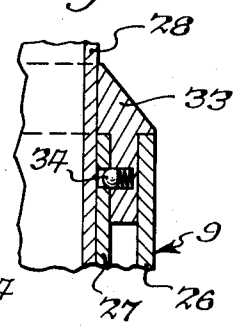

Fig. 3.

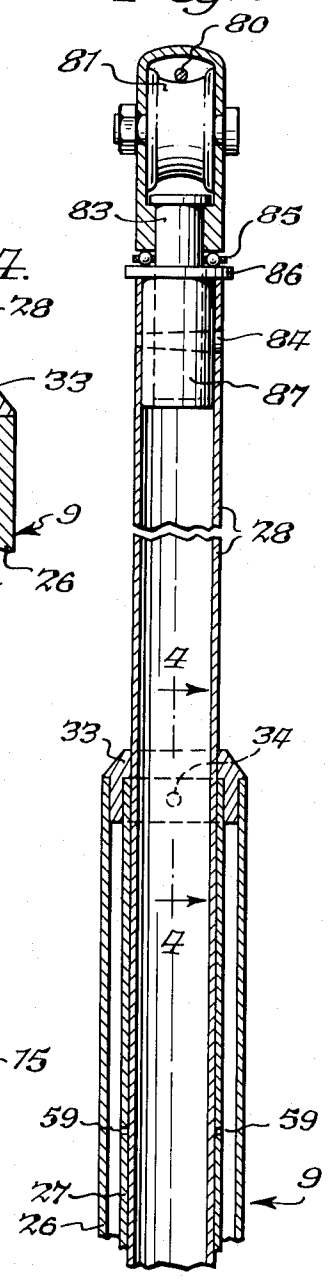

INVENTOR.

John B. Gormley

BY Parker & Prochnow

ATTORNEYS.

Dec. 7, 1965 J. B. GORMLEY 3,222,451

IMPLEMENT SUPPORTING DEVICE WITH A STANDARD SUPPORTED IMPLEMENT

Filed April 23, 1963 3 Sheets-Sheet 3

Fig. 5.

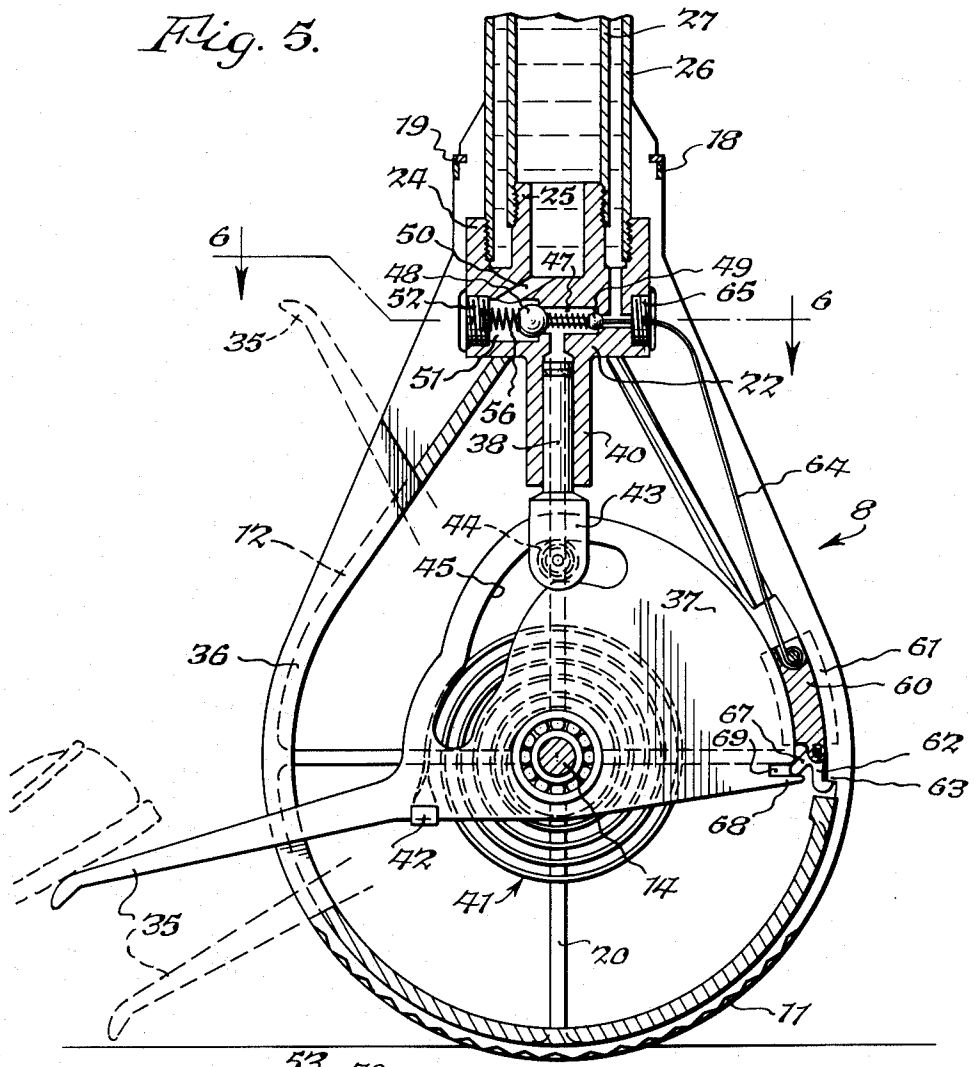

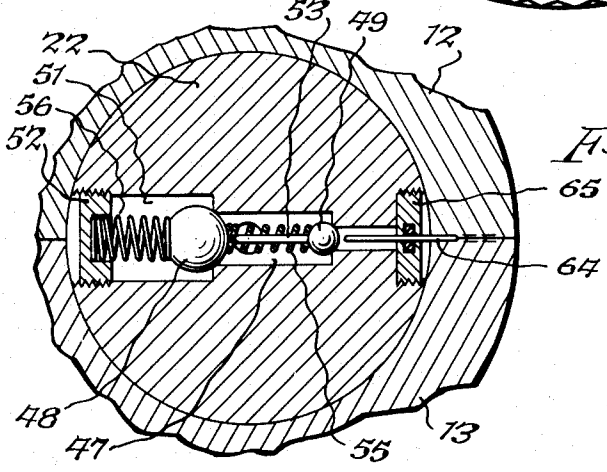

Fig. 6.

INVENTOR.
John B. Gormley
BY
Parker & Prochnow
ATTORNEYS.

United States Patent Office

3,222,451

Patented Dec. 7, 1965

3,222,451

IMPLEMENT SUPPORTING DEVICE WITH A STANDARD SUPPORTED IMPLEMENT

John B. Gormley, 60 McLellan Circle, Buffalo, N.Y.

Filed Apr. 23, 1963, Ser. No. 275,101
13 Claims. (Cl. 174—70)

This invention relates to improvements in lifting and supporting devices or jacks by means of which an implement, tool or weight may be supported to be movable in all directions and at different distances above the ground or a floor to facilitate manipulating the weight or implement.

In various types of work in which an implement or other weight must be held and moved about to different positions, the weight of the instrument is tiring to the user of the same and reduces the amount of work which he is capable of doing. For example, in trimming a hedge an electrically operated shearing or cutting implement is commonly employed which must of course be moved around to trim the top as well as the sides of the hedge, and it is desirable to provide some means for partly supporting the trimming implement in such manner that it may be freely moved into various positions.

It is consequently an object of this invention to provide a lifting and supporting device on which the implement or other weight is readily movable into different locations as the work progresses and which supporting device is mounted so as to be easily moved into different positions and elevations.

A further object is to provide an improved mounting of an actuating rod on which a weight may be mounted and moved to different positions.

A still further object is to provide foot-operated means for raising and lowering the actuating rod.

In the accompanying drawings:

FIG. 1 is an elevation of a supporting and lifting device embodying this invention.

FIG. 2 is a central, sectional elevation on an enlarged scale of the lower part of the device.

FIG. 3 is a central, sectional elevation of the upper part thereof.

FIG. 4 is a sectional elevation thereof on line 4—4, FIG. 3, on an enlarged scale.

FIG. 5 is a fragmentary, sectional elevation of the lower part thereof on line 5—5, FIG. 2.

FIG. 6 is a transverse, sectional elevation thereof on an enlarged scale on line 6—6, FIG. 5.

The supporting device shown in the drawings and constituting one embodiment of my invention has a base **8** of any suitable type, such as a bulb-like part which may rest on the ground or floor and which has a column or standard **9** mounted thereon and extending upwardly, the standard being made in two parts adjustable relatively to each other for varying the height of the same, and the upper part of the standard is provided for supporting a readily movable, manipulating rod **10** which can be grasped by the operator for moving the implement into various positions while in operation.

The base is hollow and the lower part **11** thereof may be roughened or knurled on the exterior to enable it to rest on the ground without slipping. The base **8** is preferably formed in two parts **12** and **13** secured together in any suitable manner, for example, by means of a bolt **14** to which force may be applied by means of a screw **15** to clamp the two parts of the base together. The bolt **14** is preferably arranged within two tubular projections or sleeves **16** and **17** each formed integral with one of the two parts **12** and **13** of the base, these sleeves having their inner ends extending into close proximity to each other. In addition to the bolt **14**, the two halves of the base are also secured together by means of a clamping band **18**

of any usual or suitable construction extending about the reduced upper part of the base and a split ring **19** extending into semi-circular and registering grooves in the two halves secures the two parts of the base rigidly in correct relation to each other and locks the clamping ring **18** in place. These securing means also snugly lock a fitting **22** in correct position in the base. The base also has internal reinforcing ribs or webs **20** formed integral with the walls of the base.

The raising and lowering of the standard may be effected in any suitable or desired manner such, for example, as by means of mechanism actuated by foot power. In the particular construction illustrated by way of example, I have provided hydraulic means for effecting the variations in the height of the standard, and for this purpose the base is provided at its upper portion with the fitting **22** for supporting the parts of the standard **9**, this fitting **22** having two upwardly extending flanges of annular walls **24** and **25** both of which are threaded to cooperate with the threaded lower ends of a pair of tubular members **26** and **27** which are arranged one within the other and spaced apart to form between them a reservoir for the fluid used for adjusting the elevation of a third tubular member **28**. The outer tubular member **26** is also securely clamped to the base by the snug fitting of the two halves **12** and **13** thereof. This inner, tubular member herein referred to as the plunger or ram is guided in the tubular member **27** herein also referred to as the cylinder tube, is for vertical movement. The lower part of the plunger or ram **28** is provided with a liquid-tight packing which may be of any suitable construction, for example, comprising a plug **30** suitably secured to the lower end of the plunger, for example, by means of a pin **31**. This plug supports a gasket or packing ring **32** forming a substantially fluid-tight fit with the cylinder tube. Consequently when fluid under pressure is applied to the interior of the cylinder tube **27**, the plunger tube **28** will be raised, and similarly by the discharge of fluid from the lower part of the cylinder tube **27**, the plunger tube **28** may be lowered, in which case the fluid discharged from the interior of the cylinder tube **27** will pass into the reservoir formed by the two concentric tubes **26** and **27**.

The upper portions of the tubes may be held in concentric relation to each other in any suitable manner, for example, by means of an annular bushing **33** which rests on the upper ends of the tubes **26** and **27**, and a part of which extends between the upper ends of these tubes and releasably held in place therein by a spring pressed ball **34** positioned to enter a hole or recess in the tube **27**. The upper part of the bushing **33** extends inwardly into contact with the plunger or ram tube **28**.

The means for pumping fluid from the reservoir into the cylinder tube **27** for raising the plunger tube **28** preferably includes a foot pedal **35** pivoted on the bolt **14** and extending through a slot **36** in the base **8**. This pedal is secured or formed integral with a cam plate **37** which actuates a piston **38** reciprocable in a cylinder **40** which is preferably formed integral with the fitting **22**. This piston supplies fluid from the reservoir between the tubes **26** and **27** to the interior of the cylinder tube **27**.

The cam **37** is moved in a counter-clockwise direction in FIG. 5 by depressing the foot pedal **35** and movement of the cam and foot pedal in the opposite direction is effected by means of a spring **41**, one end of which is secured to the sleeve **16** and the other end of which is secured at **42** to the foot pedal **35**.

The piston **40** has an enlarged, lower, bifurcated end **43** which straddles the cam plate **37** and has a roller **44** which rides within a cam slot **45** in the cam plate **37**. The cam slot is so formed that depression of the foot pedal from the upper position shown in broken lines in

FIG. 1 to the full line position, moves the roller 44 upwardly, thus moving the piston 38 upwardly in the cylinder 40.

Assuming that the cylinder above the piston is filled with fluid, the upward movement of the piston will force fluid into a connecting chamber or passage 47 formed in the fitting 22. This chamber 47 is closed at one end by means of a ball valve 48 and at the other end by means of another considerably smaller ball valve 49. Consequently, when fluid under pressure is forced into the connecting chamber between the two ball valves, the larger ball will be moved to the left in FIG. 5, thus admitting fluid under pressure through a valve chamber 51 to passage 50 into the space within the wall 25 and thus into the cylinder tube 27. The pressure acting on the lower end of the plunger or ram tube 28 forces the same upwardly. Upon release of pressure on the foot pedal 35 the piston moves downwardly so that the larger valve 48 will be seated and the smaller valve 49 will be opened to permit fluid from the reservoir between the tubes 26 and 27 to enter into the piston. The larger valve 48, located in the valve chamber 51 is pressed into closed position by means of the pressure of fluid in the cylinder tube 27 and by means of a spring 56 bearing at one end on this valve and at its other end on a plug 52 which closes the valve chamber 51. The smaller valve 49 is spaced from the larger valve 48 by means of a rod or stem 53 which is normally out of contact with the valve 48, thus permitting the small valve 49 which operates on the low pressure end of the device to move into its opening position without movement of the larger valve 48. A spring 55 normally urges the small valve into its closed position. This spring bears against both of the ball valves but is prevented from urging the larger valve 48 into open position by means of the larger and stronger spring 56. The pumping of additional fluid into the cylinder tube 27 may be effected by repeated strokes of the foot pedal 35 to raise the plunger or ram 28 to the desired height.

The admission and discharge of air from the upper end of the reservoir is made possible by providing holes or openings 59 in the cylinder tube 27. This tube does not have an air-tight fit with the plunger tube 38 so that air can readily pass to and from the vent opening between these two tubes. Also the vent opening can be employed to indicate the upper level of liquid to be initially placed into the device.

When it is desired to lower the piston tube or ram 28, this can be done by moving the foot pedal 35 into its lowest position, as shown in broken lines in FIGS. 1 and 5. For this purpose the cam plate 37 is provided with means for cooperating with the smaller ball valve to open the same when the foot pedal is in its lowest position. This is accomplished in the construction shown by providing a slidable member or shoe 60 mounted on a fin or track 61 of the base member and also having flanges engaging the edges of the cam plate 37. This slidable shoe 60 is normally held in its lowest position by means of a hook 62 pivoted thereto and engaging a projection 63 on the base member. The slidable shoe 60 is connected by means of a wire or other actuating means 64 having one end secured to the slidable shoe and the other end extending through an aperture in a plug 65 in the low pressure chamber of the device into proximity to the smaller valve 49. During the actuation of the foot pedal to pump fluid from the reservoir into the cylinder tube 27, the sliding member 60 and the wire 64 have no effect on the position of the wire 64 which, for example, may be supported against flexing in a lubricated groove formed in the edge of a side wall of the base. The hook 62 has an arm 67 which bears against the outer surface of the cam plate 37 during the pumping movement of the foot pedal so that the hook 62 is securely held in engagement with the stop 63. However, if the foot pedal is moved to its lowest position, the hook is swung about its pivotal connection with the sliding shoe

60 by means of an extension or finger 68 on the cam plate, which disengages the hook from its stop 63, and moves the hook arm 67 into a slot 69 in the cam plate and thus lets the further downward movement of the foot pedal cause the sliding shoe 60 to be moved upwardly. This moves the end of the wire 64 into engagement with the small valve 49, urging the same to the left in FIGS. 5 and 6, so that the rod 53 will move the large valve 48 into open position. Fluid is then free to flow from the cylinder tube 27 into the reservoir between the tubes 26 and 27, thus permitting the plunger or ram tube 28 to move downwardly, and this downward movement can be immediately stopped in any position by removing downward pressure on the foot pedal so that the spring 41 can return the foot pedal to the upper position shown in broken lines in FIGS. 1 and 5. Consequently the position of the ram tube 28 can be easily controlled by raising this tube by pressing the foot pedal downwardly as many times as is necessary, and downward movement of the ram tube is effected by gravity or manually upon moving the foot pedal to its lowest position. The standard tubes also serve as a handle by means of which the support may be moved from place to place as may be desired.

Fluid can be readily injected into the hydraulic mechanism by first removing the ram 28 upwardly out of the cylinder tube 27 and then pouring the fluid into the cylinder tube up to approximately the level of the vent holes 59. The ram tube 28 is then replaced into the cylinder tube and pressed down while holding the foot pedal at the bottom of its stroke whereupon the fluid will pass into the reservoir between the tubes 26 and 27. It is also possible to fill the reservoir with fluid to the desired extent by removing the bushing 33 and pouring the fluid directly into the space between the tubes 26 and 27. The ram can also be readily raised or lowered manually when the foot pedal is in its lowest position.

The cam slot 45, the foot pedal 35 and the slot 12 in the base are so formed as to accomplish a number of features. In the first place, the foot pedal 35 may be moved by the spring 41 into an upper position shown in broken lines in FIG. 5, in which the foot pedal is out of the way so as not to interfere with the use of the device. During this movement of the foot pedal into its upper, inoperative position, no functioning of the device results. The cam slot 45 also provides a pumping stroke for the greater portion of the movement of the foot pedal. Then at the bottom of the pumping stroke, there is a limited movement downward of the foot pedal as permitted by the upper concentric end of the cam slot, during which time the finger 68 of the cam plate moves the lever 62 into a releasing position, without however producing any function of the hydraulic mechanism. This consequently provides a safety angle between the end of the pumping stroke and the start of the valve opening stroke. Upon further downward movement of the foot pedal the valves 48 and 49 are moved into open position to permit lowering of the tube 28, and in this position the plunger tube 28 may also be raised and lowered manually.

The manipulating rod 10 is preferably in the form of a tube into which an electrical conductor 75 extends to an outlet 76 to which an implement may be electrically connected. The outer end of this rod 10 is preferably provided with means for securing to an implement, such for example as screw threads 77 on the end of the rod.

I have provided a universal adjustment for the manipulating rod, that shown being in the form of a cord 80 having the opposite ends thereof connected to the rod 10 and passing intermediate of its ends over a pulley 81 on the top of the ram tube 28. The pulley 81 is journalled in a bracket 82, FIG. 3, which has the lower end thereof rotatably mounted on a stud or part 83 secured to the upper end of the ram tube in any suitable manner, for example, by means of a pin 84. The bracket 82 is mounted in any suitable manner to swing about

the axis of the ram tube **28**, ball bearings **85** being shown in the construction illustrated which ride on an annular shoulder **86** of a tubular plug **87** also secured on the ram tube **28** by means of the pin **84**.

The cord may be adjustably secured to the manipulating rod **10** in any desired manner, for example, by attaching the ends thereof to hangers **88** through which the rod extends and which have holes through them of slightly larger diameter than the diameter of the rod so that when these hangers are arranged in planes perpendicular to the rod they can be readily moved lengthwise of the rod but when moved into inclined positions as shown in FIG. 1, the hangers will grip the rod. The cord may be secured to these hangers in any suitable manner, for example, by means of snap hook **89**.

The shoulder **86** extends slightly beyond the outer surface of the ram tube **28** and when the tube is in its lowest position, the edge of the shoulder **86** will rest upon the upper end of the bushing **33**, the upper conical end of which may be slightly flattened, as shown.

By means of the construction described, it will be obvious that the manipulating rod **10** may be moved in any direction relatively to the standard. It may be moved forwardly and rearwardly or at different inclinations, in which case the cord **80** will run over the pulley **81** to support the rod in any desired position. Also the rod may be moved completely around the standard, in which case the pulley will assume the correct position by rotating on the bearing **85**. The raising or lowering of the implement may be effected by the user's foot, so that he need not release his grip on the manipulating rod. Also the rod **10** may be lifted over the standard so as to be on the opposite side thereof, which position may be more convenient for some persons or for certain operations.

By making the hangers **88** adjustable lengthwise of the rod **10**, the leverage acting on the weight supported on the end of this rod may be varied as desired. By attaching the hanger **88** nearer to the weight supporting end **77**, a greater leverage for raising the weight can be obtained. By mounting the hanger **88** farther from the end **77**, a lesser leverage results but greater movement of the weight supported on the end **77**.

It will be understood that various changes in the details, materials and arrangements of parts which have been herein described and illustrated in order to explain the nature of the invention may be made by those skilled in the art within the principle and scope of the invention as expressed in the appended claims.

I claim:

1. A supporting device including a base,
an upright standard comprising two members one of which is mounted on said base and the other of which is adjustable lengthwise of said first mentioned member,
means for adjusting said other standard member and supporting it in adjusted position,
a cord supported intermediate of its ends on the upper end of said other standard member to slide in the direction of its length crosswise thereof,
and an adjustable rod extending crosswise of said standard for supporting a weight on one end thereof,
the ends of said cord being secured to said adjustable rod at opposite sides of said standard, whereby sliding of said cord relatively to said standard enables said rod to be moved into different angular relations to said standard.

2. A supporting device according to claim **1** and including means for adjusting an end of said cord in different locations lengthwise of said rod.

3. A supporting device according to claim **1** in which said rod is of tubular form,
and an electric conductor arranged within said tubular rod and having a terminal at one end thereof to which an implement may be electrically connected.

4. A supporting device according to claim **1** in which said other standard member has a pulley mounted on the upper end thereof over which said cord passes for adjusting said rod into different angular relations to said upright standard.

5. A weight supporting device according to claim **4** and including a support for said pulley pivotally connected on said other standard member to swing about an axis extending lengthwise of said standard to enable said supporting rod and said cord to swing about said standard.

6. An implement-supporting device including a base,
an upright standard formed of telescopically arranged tubes one of which is secured to said base and another of which is slidable within said first mentioned tube, said first tube constituting a cylinder and said other tube having a fluid-tight lower end constituting a piston,
a maneuverable weight-supporting rod mounted on said other tube,
a flexible cord supported intermediate of its ends on said other tube and adjustable in the direction of its length on said other tube and having its ends secured to said rod,
and hydraulic means for supplying fluid under pressure to said first tube for moving said other tube relatively to said first mentioned member.

7. An implement-supporting device including a base,
an upright standard including
a cylinder tube secured to said base and
a piston tube slidable within the cylinder tube and movable vertically into different positions,
a reservoir for hydraulic fluid,
a pump for supplying fluid from said reservoir to said cylinder tube for raising the piston tube,
valve means controlling the passage of fluid to and from said cylinder tube,
a foot operated mechanism in said base for actuating said pump,
a valve actuating device forming a connection between said foot-operated mechanism and said valve means for moving said valve means into a position for discharging fluid from said cylinder tube to said reservoir to lower said piston tube,
and means for holding said valve actuating device against movement during pump actuating movement of said foot-operated mechanism and for releasing said valve actuating device when said foot-operated mechanism is moved to a position other than that employed for actuating said pump.

8. An implement-supporting device according to claim **7** in which said valve actuating device includes
a shoe slidably mounted on said base and held against movement relatively to said base when said pump is actuated by said foot-operated mechanism,
and means associated with said foot-operated mechanism for disconnecting said shoe from said base and moving the same into position to actuate said valve.

9. An implement-supporting device including a base,
an upright standard including
a cylinder tube secured to said base and
a piston tube slidable within the cylinder tube and movable vertically into different positions,
a reservoir for hydraulic fluid,
a pump for supplying fluid from said reservoir to said cylinder tube for raising the piston tube,
valve means controlling the passage of fluid to and from said cylinder tube,
a foot pedal having a cam plate connected therewith, said cam plate having a cam slot therein,
said pump including a plunger with a part cooperating with said cam slot for reciprocating said plunger,
spring means urging said foot pedal upwardly,
said slot having a part moving said plunger through a pumping stroke when said pedal is moved downwardly through a portion of its stroke,

said slot also having a part permitting said pedal to move into its lowest position to move said valve means into open position in which fluid can pass from said piston tube to said reservoir to permit said piston tube to move downwardly,

locking means which hold said valve means against movement,

and a part on said cam plate for unlocking said locking means during a part of its movement into valve-actuating position,

said unlocking movement of said pedal constituting a safety interval between the pumping stroke and the valve opening stroke.

10. A supporting device according to claim **6** and including a grooved pulley mounted on the upper end of said other tube to rotate about a substantially horizontal axis and over which said cord passes.

11. An implement-supporting device including a base,

an upright standard formed of telescopically arranged tubes one of which is secured to said base and another of which is slidable within said first mentioned tube, said first tube constituting a cylinder and said other tube having a fluid-tight lower end constituting a piston,

a maneuverable weight-supporting rod mounted on said other tube,

a grooved pulley mounted to swing about a horizontal axis,

a stud mounted on said other tube to swing coaxially therewith and on which said pulley is mounted,

and a flexible cord cooperating with said pulley and adjustable thereon in the direction of its length and having the opposite ends thereof secured to said rod in spaced relation to each other.

12. A weight-supporting device including a base,

an upright standard formed of telescopically arranged tubes one of which is secured to and supported on said base and the other of which is slidable within said first mentioned tube,

means for adjusting said other tube vertically and supporting the same in adjusted position,

a movable rod extending crosswise of said standard and having means at one end thereof for supporting a weight and counterbalanced by an operator at the other end thereof,

a pulley on the upper end of said standard having its sheave rotatable about a substantially horizontal axis,

and a cord operating with said pulley and adjustable thereon in the direction of its length and having its opposite ends secured to said rod in spaced relation to each other and at opposite sides of said standard.

13. A weight-supporting device according to claim **12** and including a support for said pulley pivoted on said standard to swing about an upright axis to permit said rod to be positioned at different sides of said standard.

References Cited by the Examiner

UNITED STATES PATENTS

538,465	3/1895	Peyton	254—93
990,570	4/1911	Lavery	254—93
1,723,131	8/1929	Burkholder et al.	60—52
2,089,868	8/1937	Williams	248—61 X
2,231,631	2/1941	Maina	248—161
3,160,755	12/1964	Wolfe	250—92

JOHN F. BURNS, *Primary Examiner.*

DARRELL L. CLAY, *Examiner.*