US 20060196394A1

(19) United States

(12) Patent Application Publication (10) Pub. No.: US 2006/0196394 A1

Bailey (43) Pub. Date: Sep. 7, 2006

(54) PALLET

(76) Inventor: **Alexander W. M. Bailey**, Burrawang, NSW (AU)

Correspondence Address:
TOWNSEND AND TOWNSEND AND CREW, LLP
TWO EMBARCADERO CENTER
EIGHTH FLOOR
SAN FRANCISCO, CA 94111-3834 (US)

(21) Appl. No.: **10/550,239**

(22) PCT Filed: **Oct. 13, 2004**

(86) PCT No.: **PCT/AU04/01397**

(30) **Foreign Application Priority Data**

Oct. 15, 2003 (AU) 2003905661

Publication Classification

(51) **Int. Cl.**
B65D 19/16 (2006.01)

(52) **U.S. Cl.** **108/56.1**

(57) **ABSTRACT**

A metal pallet (**1**) having: a top deck (**5**), a bottom deck (**10**) and at least two elongate bearers (**15**) securing the decks (**5, 10**) together. Each bearer (**15**) having a first portion (**16**) and a second portion (**17**), each portion (**16, 17**) extends separately between the decks (**5, 10**) and has a top web (**20**) and a bottom web (**25**) connected to a central web (**30**) by inclined portions (**35**).

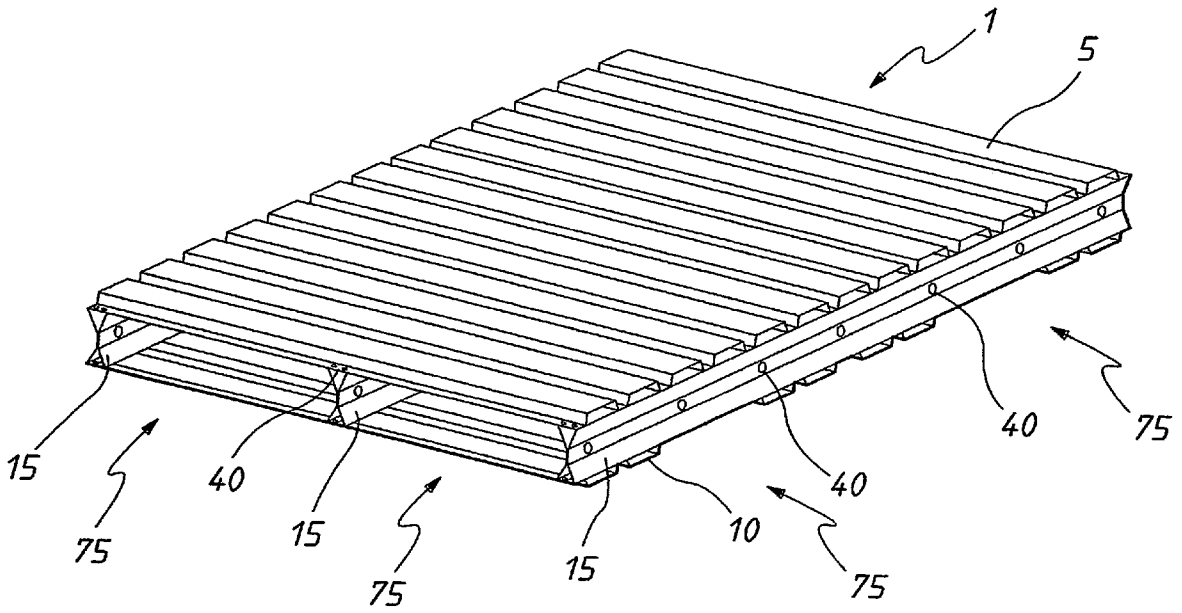

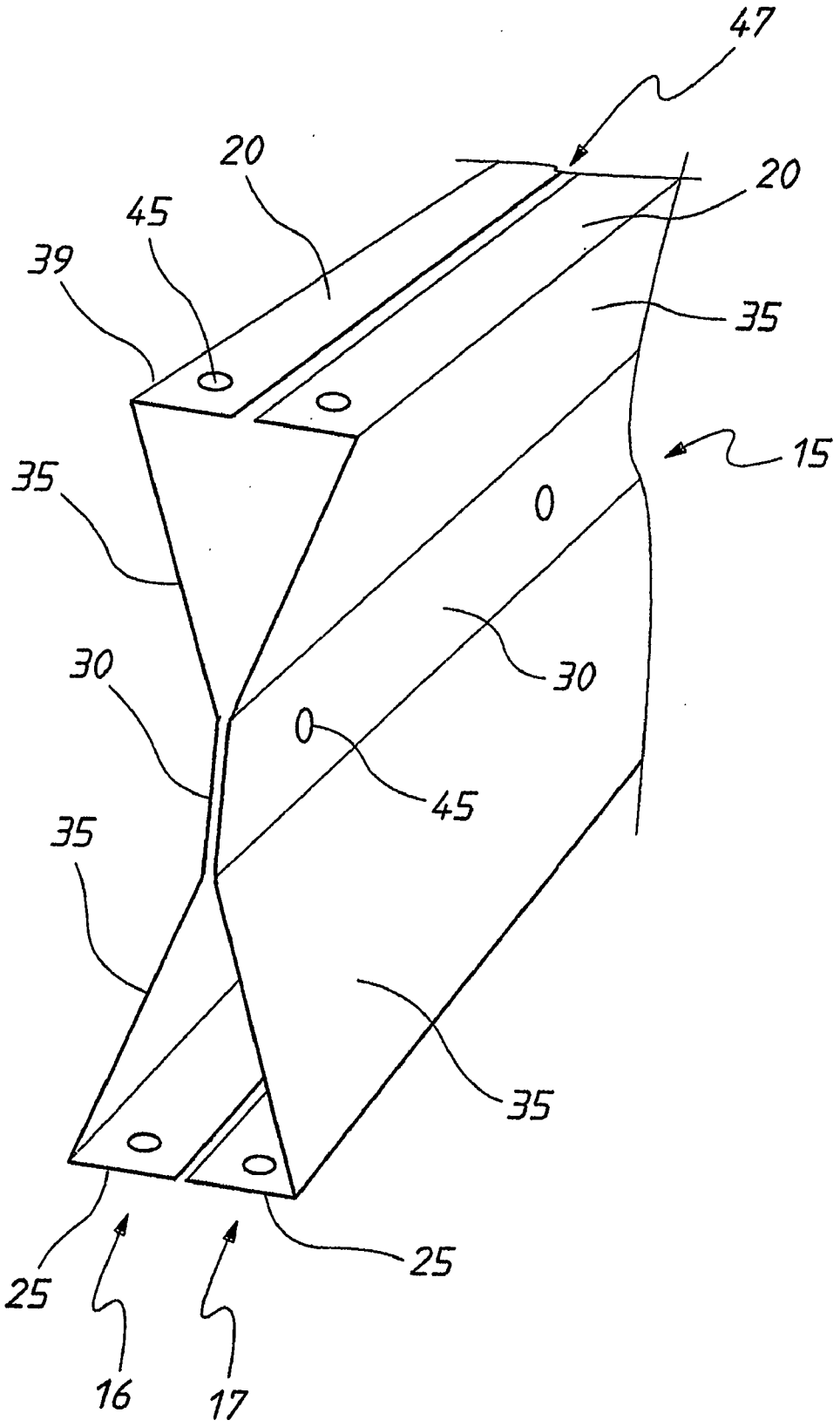

FIG. 1

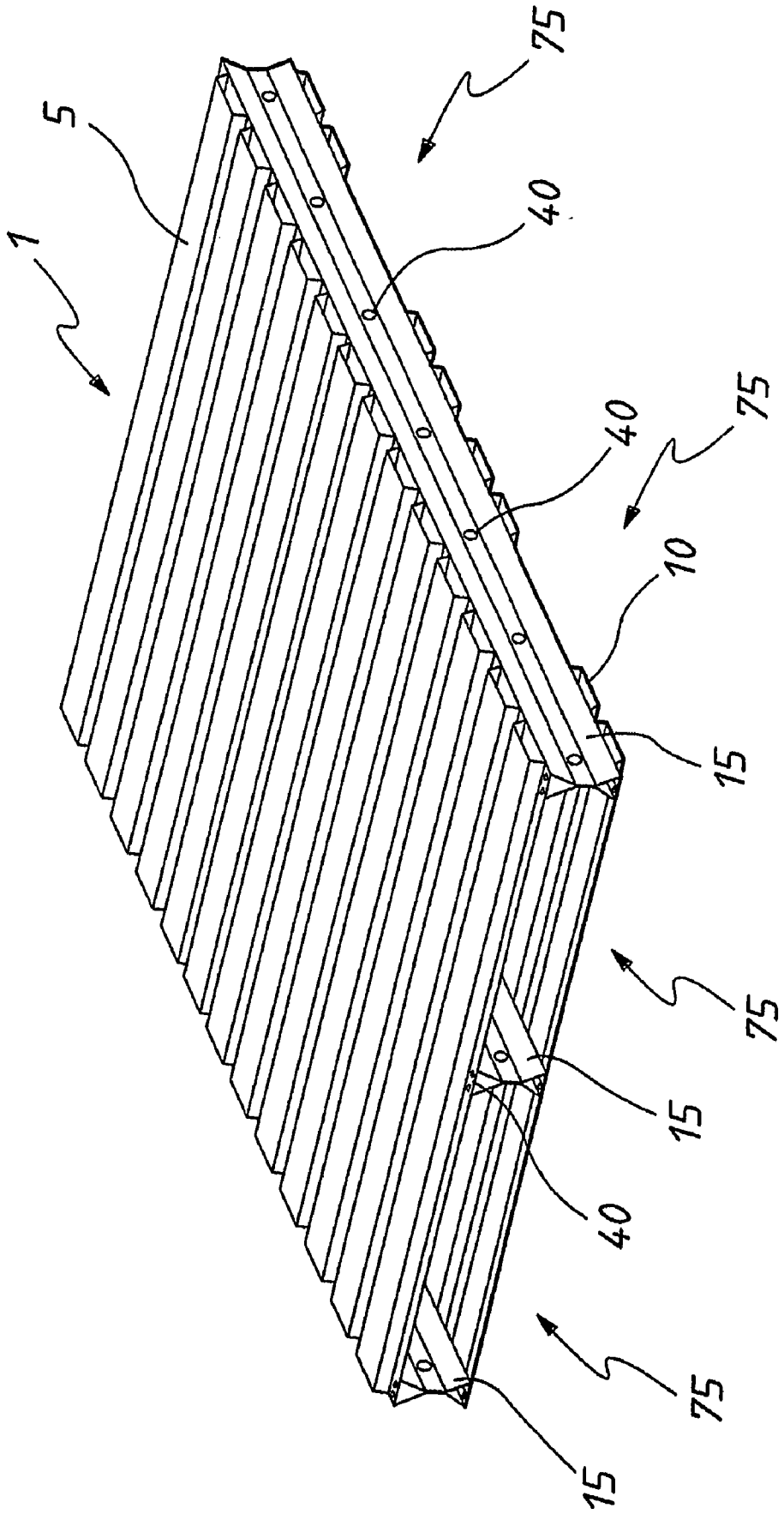

FIG.2

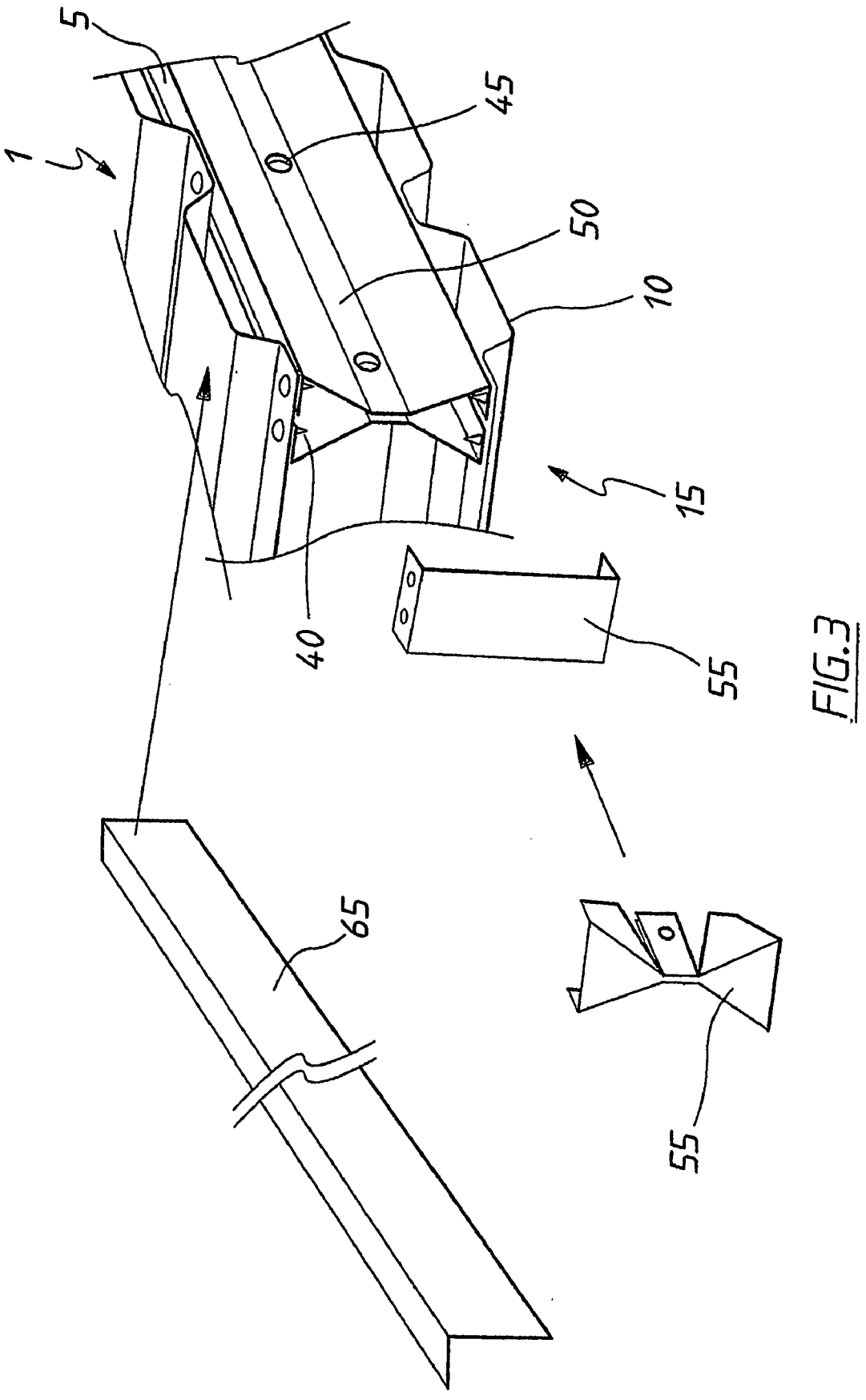

FIG.3

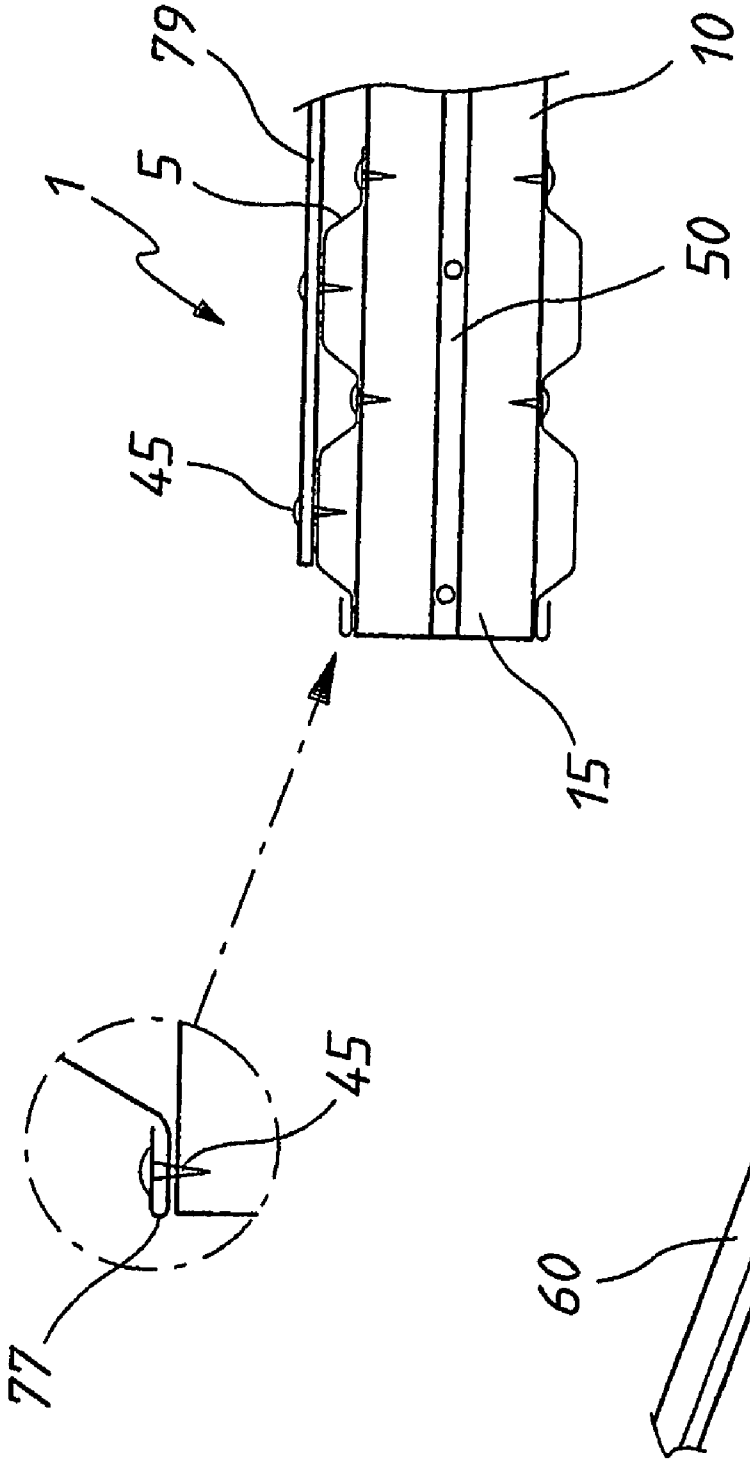

FIG.4

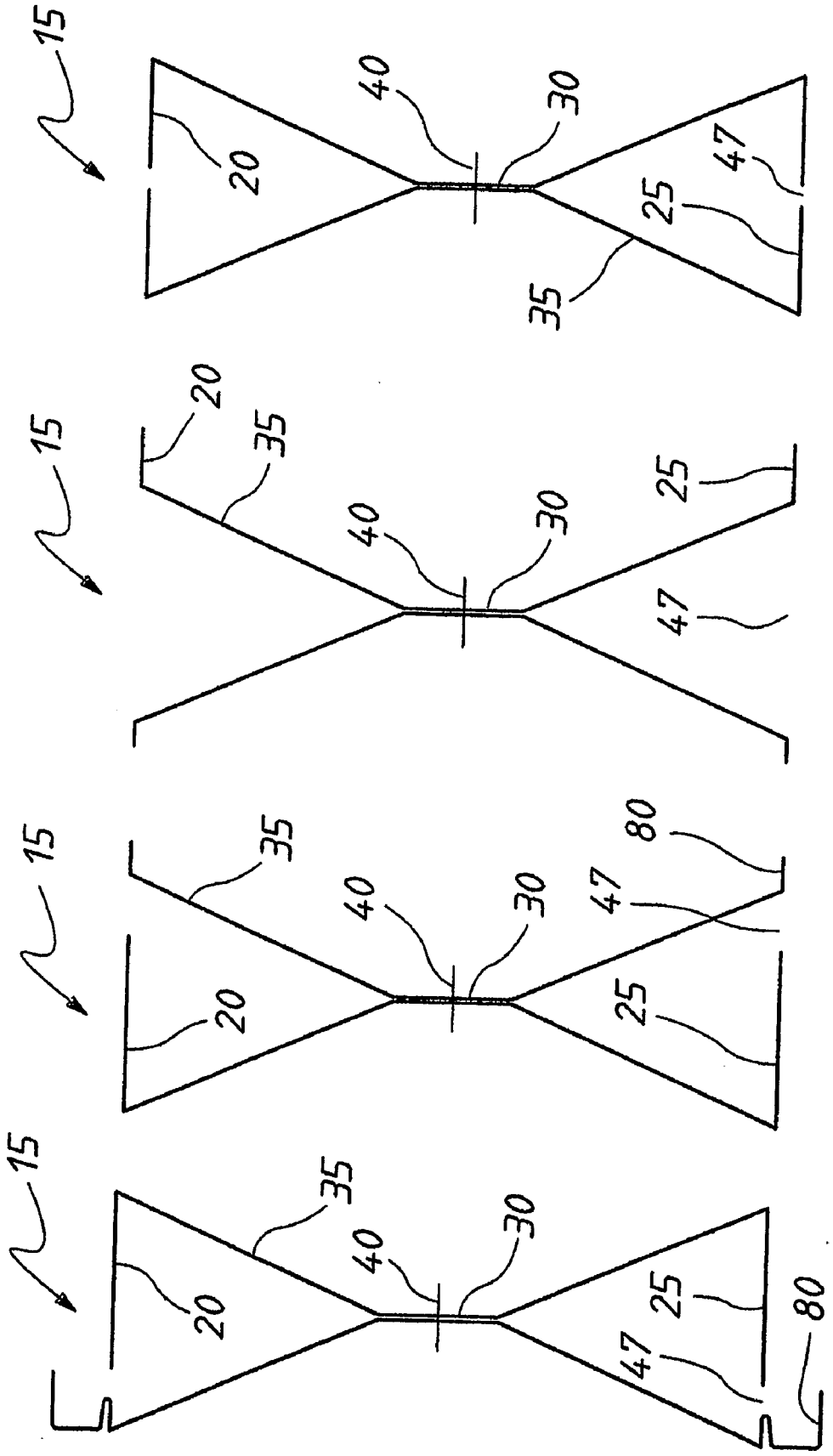

FIG.5d

FIG.5c

FIG.5b

FIG.5a

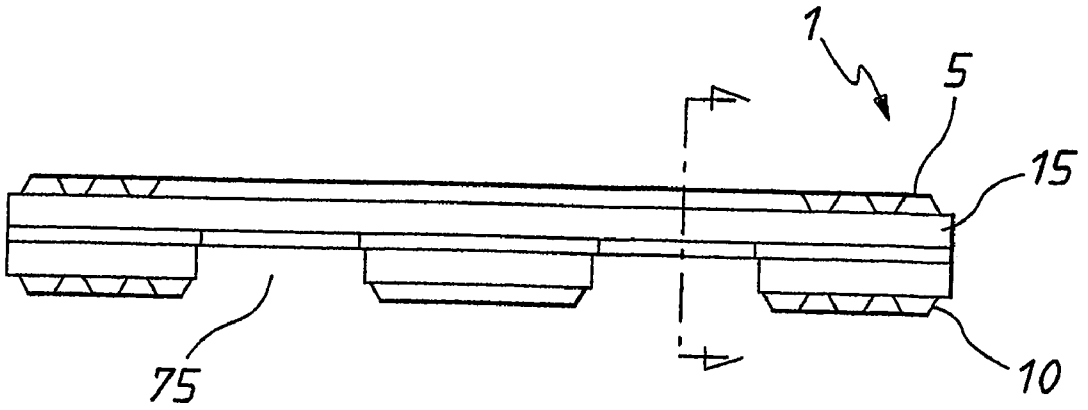

FIG.6a

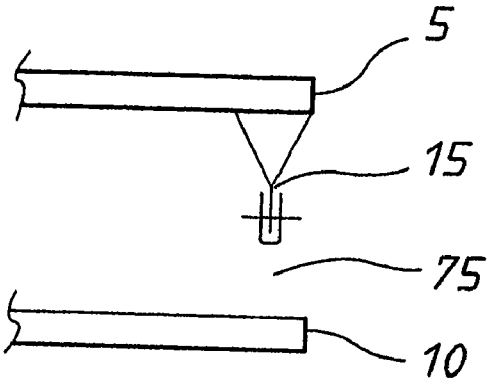

FIG.6b

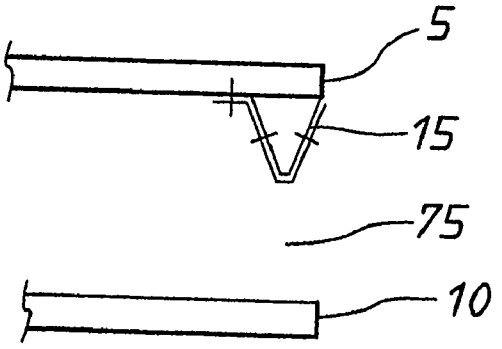

FIG.6c

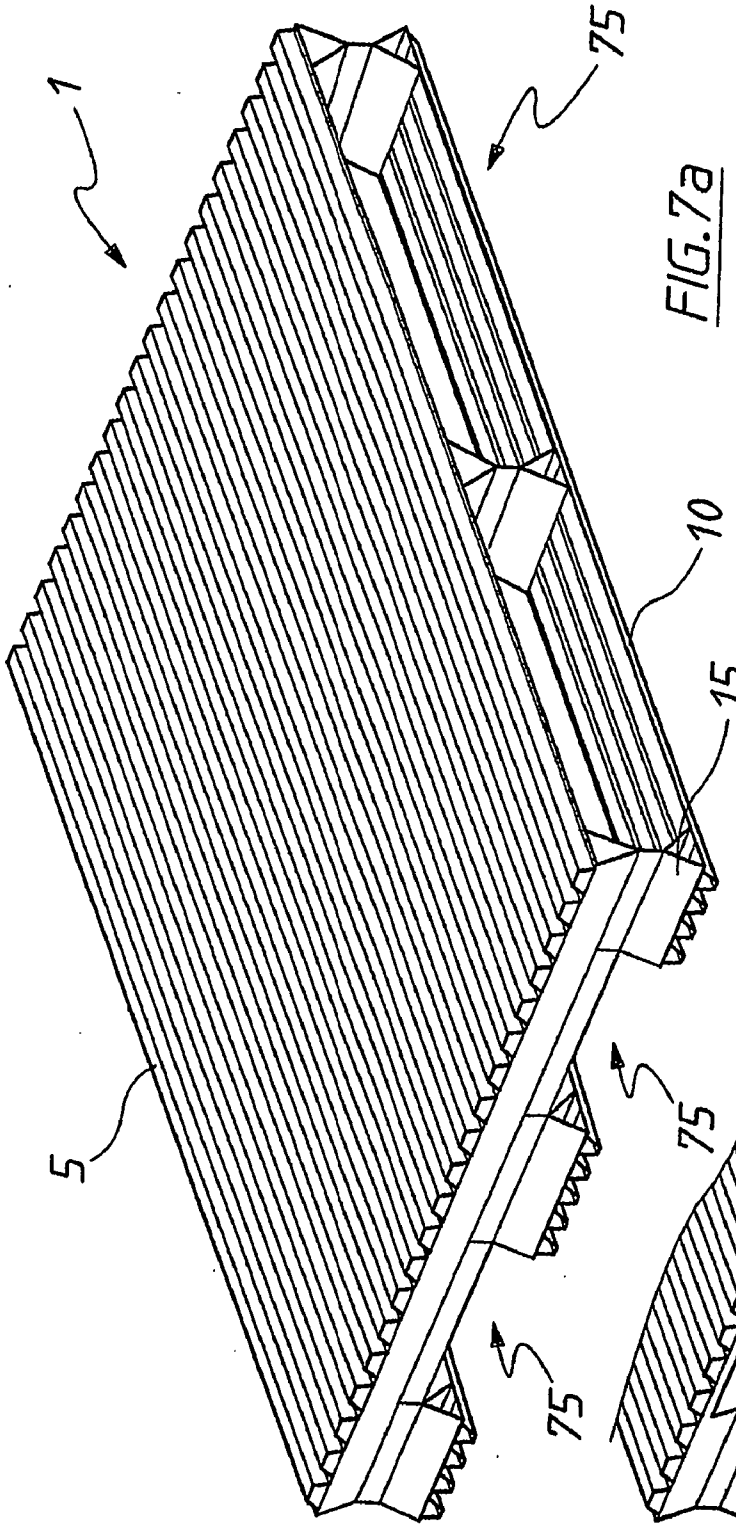

FIG.7a

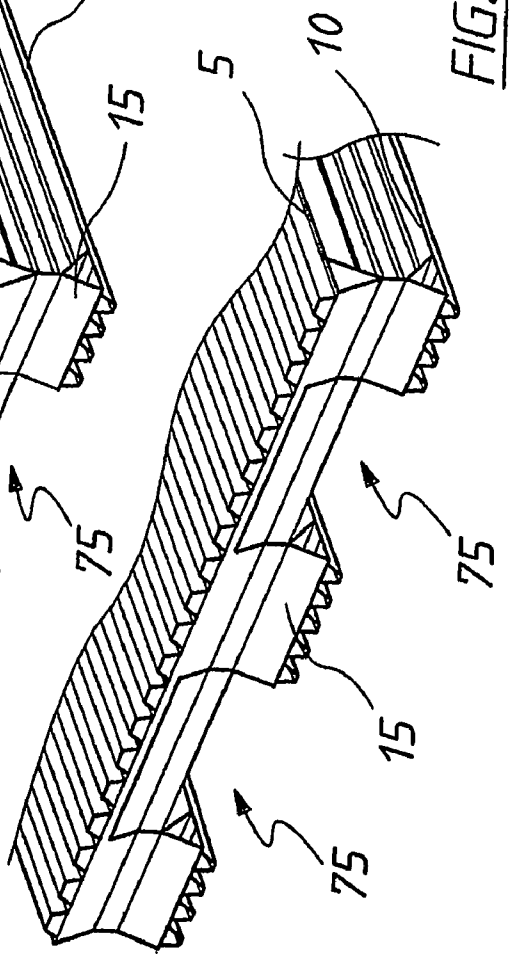

FIG.7b

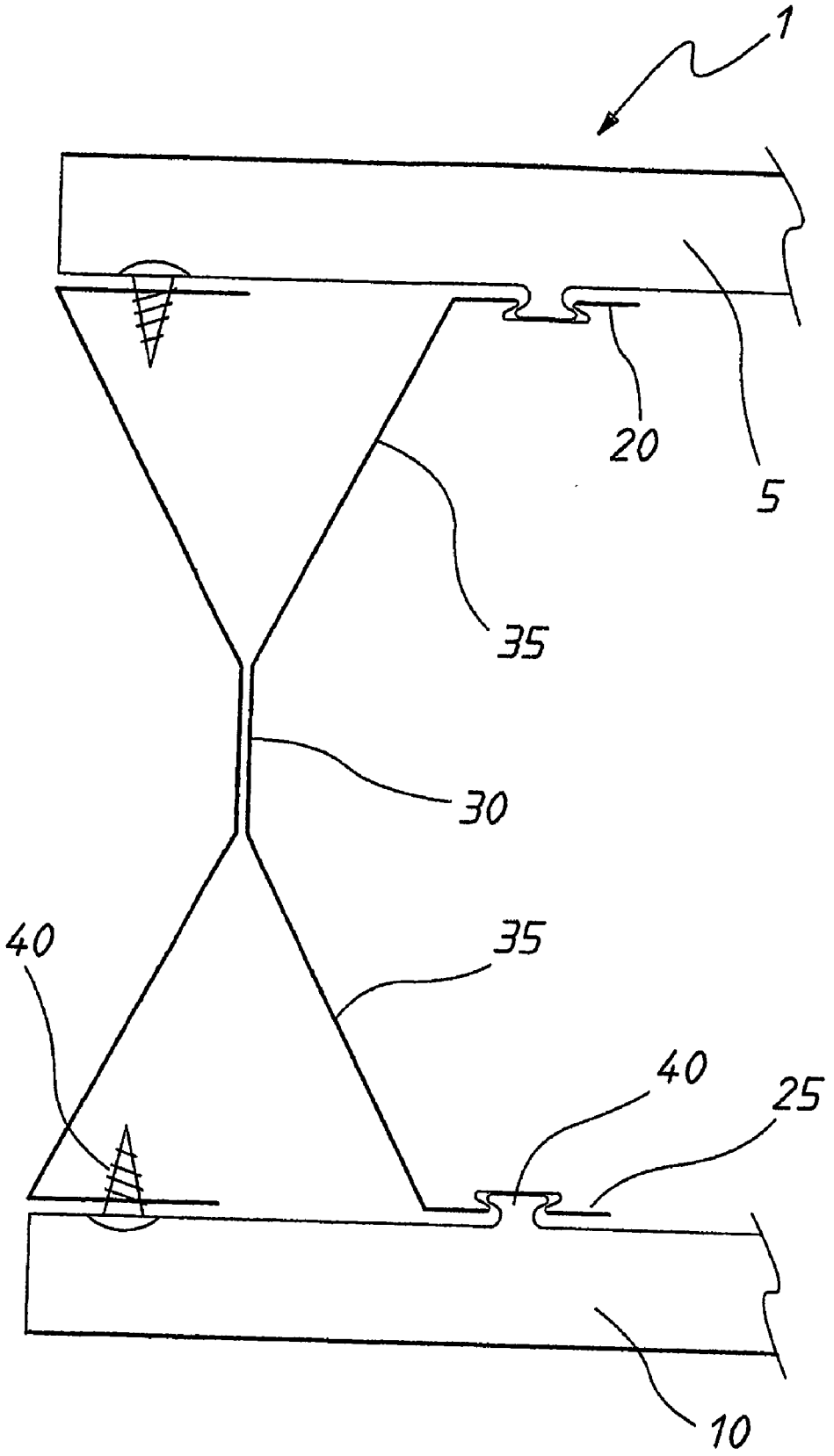

FIG.8

PALLET

FIELD OF THE INVENTION

[0001] The present invention relates to pallets and in particular to a multi-purpose pallet having detachable components.

BACKGROUND OF THE INVENTION

[0002] Pallets made of wood are typically used throughout the world for easy storing and transporting of goods. These pallets are generally of a square shape having an upper and lower deck made of a series of wooden planks and at least two solid wooden beams therebetween. The pallet is normally nailed together and includes slots within which a forklift's tines or other material handling devices can be located for lifting and moving the pallet.

[0003] Known pallets suffer from many disadvantages. For example; they are expensive to manufacture; require repeated repair; are limited to standard sizes; have protruding fixings or connections; are limited in the amount they can carry; are easy to damage or break; are heavy; difficult to attach additional components when required; absorb moisture, liquids and odours; are a fire risk; can have termite and insect contamination; splinter easily; the nails can loosen; have a short life span and the timber used is generally from hardwood forests. Of particular concern is that wood pallets damaged easily and the repair or replacement of the pallet is expensive, time consuming and it is usually easier to just discard the pallet. Further, wood pallets retain dirt and other undesirable substances which minimises their use in contamination or hygienic areas such as the food or medical industries.

[0004] Metal and plastic pallets have also been developed. These types of pallets have many disadvantages similar to wood pallets.

[0005] Accordingly, there is a need for a lightweight metal pallet that has releasably connectable parts for easy maintenance and repair, overcomes debris and contamination problems and includes no sharp edges.

OBJECT OF THE INVENTION

[0006] It is an object of the present invention to overcome or ameliorate some of the disadvantages of the prior art, or at least to provide a useful alternative.

SUMMARY OF THE INVENTION

[0007] There is firstly disclosed herein a metal pallet having:

[0008] a top deck;

[0009] a bottom deck; and

[0010] at least two elongate bearers securing said decks together;

[0011] each bearer having a first portion and second portion, each portion extends separately between said decks and has a top web and a bottom web connected to a central web by inclined portions.

[0012] Preferably, said central webs of said first and second portions are releasably securable together.

[0013] Preferably, said central webs are substantially normal to said decks.

[0014] Preferably, said top and bottom webs are releasably securable to said decks.

[0015] Preferably, said webs are releasably securable to said decks and/or each other by fastening means.

[0016] Preferably, said fastening means are threaded fasteners.

[0017] Preferably, said pallet includes a plurality of holes for receiving each said fastening means.

[0018] Preferably, said fastening means are welds or rivets.

[0019] Preferably, said pallet is of a generally rectangular configuration having a front edge, a rear edge and two side edges.

[0020] Preferably, at least one edge includes a cover plate.

[0021] Preferably, at least one elongate bearer includes a stiffener.

[0022] Preferably, at least one bearer includes an end cap.

[0023] Preferably, said top and/or bottom deck is of a profiled configuration.

[0024] Preferably, said profiled configuration are corrugations.

[0025] Preferably, said pallet includes sheet material secured to at least one said deck.

[0026] Preferably, said pallet includes cavities for receipt of tines of a forklift or other handling equipment.

[0027] Preferably, said cavities are located on all sides of said pallet.

BRIEF DESCRIPTION OF THE DRAWINGS

[0028] A preferred form of the present invention will now be described, by way of example only, with reference to the accompanying drawings wherein:

[0029] **FIG. 1** is a partial perspective view of a bearer for a pallet of an embodiment of the present invention;

[0030] **FIG. 2** is a perspective view of a pallet of an embodiment of the present invention;

[0031] **FIG. 3** is a partial perspective view of the pallet of **FIG. 2** with attachments;

[0032] **FIG. 4** is a partial side view of the pallet of **FIG. 2** with attachments.

[0033] **FIGS. 5***a* to **5***d* are cross-sectional views of bearer embodiments for a pallet of the present invention;

[0034] **FIGS. 6***a* to **6***c* are partial side views of embodiments of the invention showing recesses for tines of a forklift;

[0035] **FIGS. 7***a* and **7***b* are perspective views showing the four way openings of **FIGS. 6***a* to **6***c;* and

[0036] **FIG. 8** shows a cross-sectional view of an alternate embodiment of the pallet of **FIG. 1**.

DETAILED DESCRIPTION OF THE PREFERRED EMBODIMENTS

[0037] There is disclosed herein a pallet I manufactured of metal typically galvanised steel or aluminium. The pallet **1** includes a top deck **5**, a bottom deck **10** and at least two elongate bearers **15** securing the decks **5**, **10** together. As best seen in **FIGS. 1, 5***a* to **5***d* and **8** each bearer **15** has a first portion **16** and a second portion **17** extending separately between the decks **5**, **10** and having a top web **20** and a bottom web **25** connected to a central web **30** by inclined portions **35**. In use, the webs **20**, **25**, **30** of the first and second portions **16**, **17** are releasably securable to each other and the decks **5**, **10** by fastening means **40** such as a threaded fastener which is typically located in holes **45**. In the preferred form the central webs **30** are substantially vertical or normal to the decks **5**, **10**. Alternatively, the fastening means **40** could be a weld or rivet, the pallet **1** easily being repaired by drilling out the weld or rivet, replacing the part and re-welding or riveting.

[0038] Typically, the portions **16**, **17** of the bearers **15** are positioned abutting each other and fastening means **40** in the form of a threaded fastener, spot welds, blind rivet or the like secure the two central webs **30** together. The pallet **1** can also include a counter-sunk bore or aperture in the holes **45** for hiding the fastening means **40** below the plane of the adjacent surfaces. This will ensure no sharp objects, such as the end of a bolt, protrude above the adjacent surface of the deck **5**, **10**. As best seen in **FIG. 3**, the elongate bearer **15** can also include a stiffener strip **50** to provide further support to the bearer **15** when the pallet **1** is required for heavy loads. The stiffener strip **50** is merely attached along the central web **30** at the holes **45** for the fastening means **40**. The pallet **1** can also include many additional components to provide a more profiled pallet **1**. For example, the top or bottom decks **5**, **10** can include profiled configurations such as corrugations as best seen in **FIGS. 2 and 7***a*, **7***b*. Cover plates and end caps **55** or the like as seen in **FIGS. 3 and 4** could also be utilised.

[0039] Referring specifically to **FIGS. 1, 5***a* to **5***c* and **8**, the top and bottom webs **20**, **25** are load support flanges providing an opening **47** therebetween allowing access for spot welding or attaching threaded fasteners such as screws or bolts or the like. The separator of the portions **16**, **17** also allows for only one side of the bearer **15** to be replaced if required. In a preferred form, the webs **20**, **25** are abutting. A rounded non-sharp edge is preferably provided between the webs **20**, **25** and inclined portions **35**. The overall dimensions of all components can change depending upon the required pallet **1**.

[0040] In **FIG. 2 a** standard 1000×1200 cm pallet **1** is shown. The pallet **1** dimensions can vary to suit particular industry requirements such as, 1165×1165 cm, for example. The decks **5**, **10** can be in varying configurations, such as corrugations, flat panels, curves or the like. The corrugations for example, can be in any direction, non-uniform, and/or a combination of directions or shapes depending on the load to be lifted and moved. In the embodiment shown, galvanised steel corrugations are shown providing superior strength and durability. The corrugations also provide maximum surface contact while retaining structural adequacy. However, a 100% flat surface **79** can be provided in place of the corrugations or affixed to the top of the corrugations (see **FIG. 4**) or a combination of surfaces can be provided.

[0041] The advantages of the pallet **1** as shown herein is that all components can be disassembled and reassembled or damaged components easily replaced, if required. Shaped sleeves **60** (as best seen in **FIG. 4**) made of any material could also be added to cover edges and increase strength. End caps **55** could also be added to provide a more aesthetically looking pallet **1**, provide impact resistance, cover apertures and edges at the ends of the bearers **15**. If corrugations are used an edge strip **65** could also be provided to seal in any openings for hygiene requirements. There is also shown in **FIGS. 2, 6***a* to **6***c*, **7***a* and **7***b*, openings **75** for the tines or wheels of forklifts and pallet trucks. The pallet **1** could also include a cross member (not shown) between the bearers **15** or inside the corrugations to provide additional support for very heavy loads.

[0042] **FIG. 4** also shows additional componentary including a lip **77** formed in the corrugations to ensure no sharp edges and to stiffen against impact from a forklift. A separate U-shaped cover **60** could also be provided as mentioned above. The lip **77** also provides an increase in the horizontal strength of the pallet **1**. This embodiment also shows a further sheet material **79** across the top of the corrugations and a stiffener strip **50**. The sheet material **79** could be galvanised steel, timber, plastic or any other material, if required.

[0043] **FIGS. 5***a* to **5***d* and **8** show different embodiments of the bearer **15**. These embodiments are utilised for different fastener combinations allowing easy access to the bearer **15**. As seen in **FIGS. 5***a* and **5***b* additional members **80** can be included to receive the decks **5**, **10**.

[0044] **FIGS. 6***a* to **6***c*, **7***a* and **7***b* show further embodiments of the invention, detailing openings **75** in the pallet **1** for allowing four way entry for a lifting device.

[0045] **FIG. 8**, shows a further embodiment of the invention having fastening means **40** in the form of a screw and rivet. The webs **20** and **25** are turned inward to reduce sharp edges.

[0046] The pallet **1** disclosed herein can be completely disassembled as all components can be replaced individually quickly and inexpensively. Pallet **1** has extremely strong load bearing capacity due to the angles of the members making up the portions **16**, **17**; has structural adequacy and load distribution for rotational movements; the shape can be altered in all dimensions and angles for various purposes; smooth non sharp surfaces on each bearer **15** horizontal side surfaces; small cross sectional area of end maximises width of openings **75** for fork lift tines; allows for bolted, riveted, screwed or welded fixings **40** for joins and decks **5**, **10** to bearers **15**; holes or apertures **45** are recessed allowing for non protruding fixings/connections; external side has no visible joins, resists dirt collection; interior space is minimised to reduce contamination area; interior space small to enhance any cleaning pressure hose effect; the bearers **15** could be galvanised steel or aluminium.

[0047] The deck **5**, **10** and the additional sheet material layer **79** could be steel, timber, plastic, paperboard, composites or fibres. The steel bearers **15** for example could support timber decking and be secured by a threaded nail, bolt or the like. The bearer **15** shape allows for mid height horizontal stiffener **50** attachment for extra heavy loads; bearer shape can be segmented to allow for **4** way pallet

option; deck **5**, **10** can be adapted to 100% coverage if pallet **1** purpose requires; one or more additional decks **5**, **10** could be added; allows hygienic adaptability for food industry requirements; deck board profile can have edge returns **77** roll formed to avoid sharp edges; deck board edge return **60** to stiffen end against fork lift and pallet truck impact; bearer **15** shape allows for timber deck boards if necessary; deck board shape can have steel strip attached to cover cavities; deck board profile can have 45-60 degree folded ends to eliminate sharp edges; and alternatively deck boards can have horizontal angle cover attachment.

[**0048**] Although the invention has been described with reference to specific examples, it will be appreciated by those skilled in the art that the invention may be embodied in many other forms and other structures.

1. A metal pallet having:

a top deck;

a bottom deck; and

at least two elongate bearers securing said decks together;

each bearer having a first portion and second portion, each portion extends separately between said decks and has a top web and a bottom web connected to a central web by inclined portions.

2. The pallet according to claim 1, wherein said central webs of said first and second portions are releasably securable together.

3. The pallet according to claim 1, wherein said central webs are substantially normal to said decks.

4. The pallet according to claim 1, wherein said top and bottom webs are releasably securable to said decks.

5. The pallet according to claim 1, wherein said webs are releasably securable to said decks and/or each other by fastening means.

6. The pallet according to claim 5, wherein said fastening means are threaded fasteners.

7. The pallet according to claim 5, wherein said pallet includes a plurality of holes for receiving each said fastening means.

8. The pallet according to claim 5, wherein said fastening means are welds or rivets.

9. The pallet according to claim 1, wherein said pallet is of a generally rectangular configuration having a front edge, a rear edge and two side edges.

10. The pallet according to claim 9, wherein at least one edge includes a cover plate.

11. The pallet according to claim 1, wherein at least one elongate bearer includes a stiffener.

12. The pallet according to claim 1, wherein at least one bearer includes an end cap.

13. The pallet according to claim 1, wherein said top and/or bottom deck is of a profiled configuration.

14. The pallet according to claim 13, wherein said profiled configuration are corrugations.

15. The pallet according to claim 1, wherein said pallet includes sheet material secured to at least one said deck.

16. The pallet according to claim 1 wherein said pallet includes cavities for receipt of tines of a forklift or other handling equipment.

17. The pallet according to claim 16, wherein said cavities are located on all sides of said pallet.

* * * * *