US 20110005706A1

(19) United States

(12) Patent Application Publication

Thomas et al.

(10) Pub. No.: US 2011/0005706 A1

(43) Pub. Date: Jan. 13, 2011

(54) METHOD FOR ONLINE CLEANING OF AIR PREHEATERS

(75) Inventors: **Scott Thomas**, Kernersville, NC (US); **Charles A. Lockert**, Chagrin Falls, OH (US)

Correspondence Address:
BUCHANAN INGERSOLL & ROONEY PC
P.O. BOX 1404
ALEXANDRIA, VA 22313-1404 (US)

(73) Assignee: **Breen Energy Solutions**, Camegie, PA (US)

(21) Appl. No.: **12/499,314**

(22) Filed: **Jul. 8, 2009**

Publication Classification

(51) **Int. Cl.**
F28D 17/00 (2006.01)

(52) **U.S. Cl.** **165/5**

(57) **ABSTRACT**

A method of cleaning air preheaters of the type having a rotor which passes through a stream of flue gas and a stream of intake combustion air is disclosed. A soot blower is operated in step-wise fashion to blow a soot blowing medium through passageways in the rotor. The passageways are arranged in concentric rings and move at a tangential velocity which depends on the speed of the rotor and the location of the passageway relative to the center of the rotor. In the present method the speed of the rotor is adjusted in accordance with the position of the soot blower so that every passageway moves over the soot blower at the same or substantially the same tangential velocity.

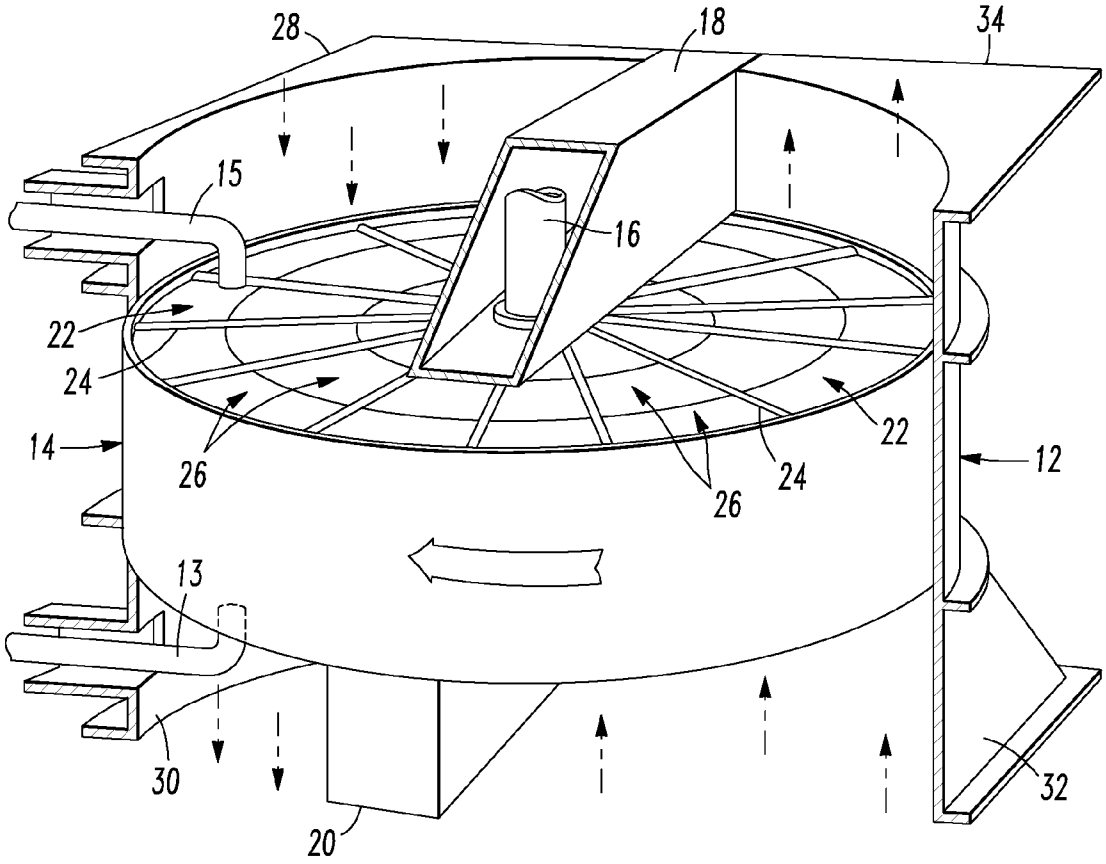

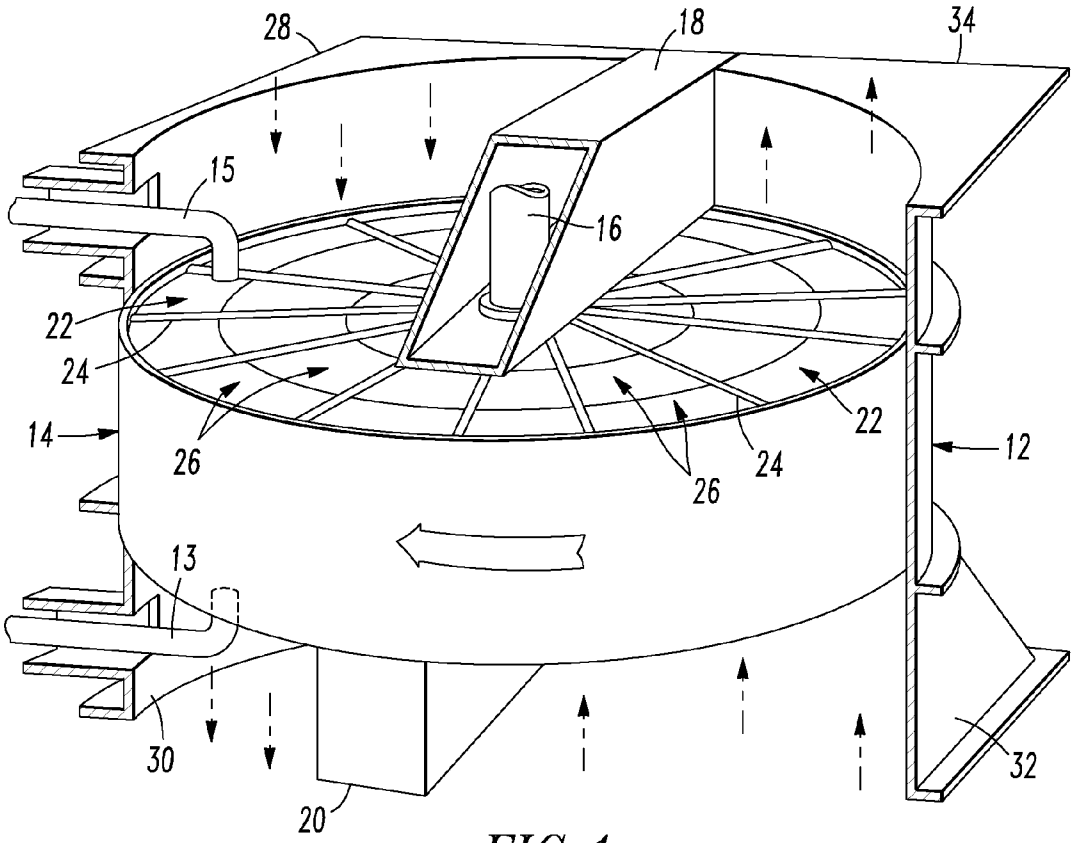
28
18
34
15
16
22
24
14
26
22
24
26
12
13
30
32
20

FIG. 1

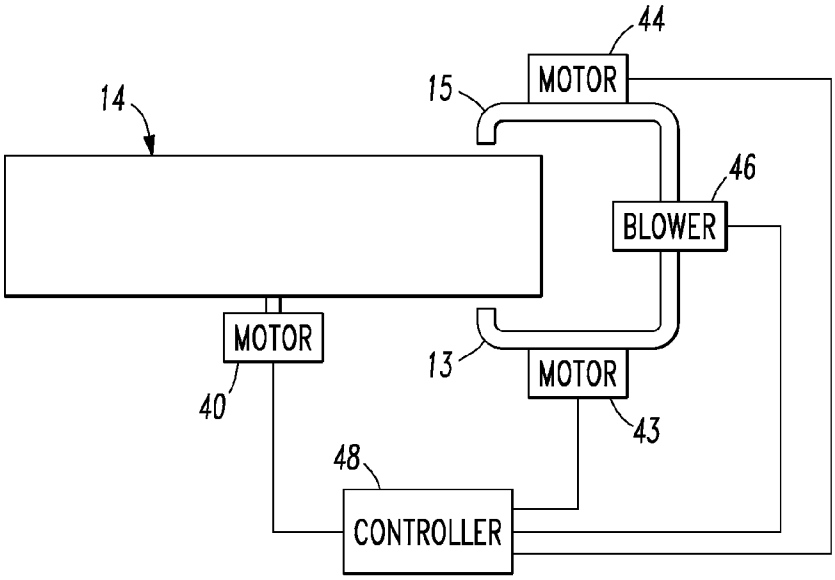
44
MOTOR
15
14
46
BLOWER
MOTOR
13
MOTOR
40
43
48
CONTROLLER

FIG. 2

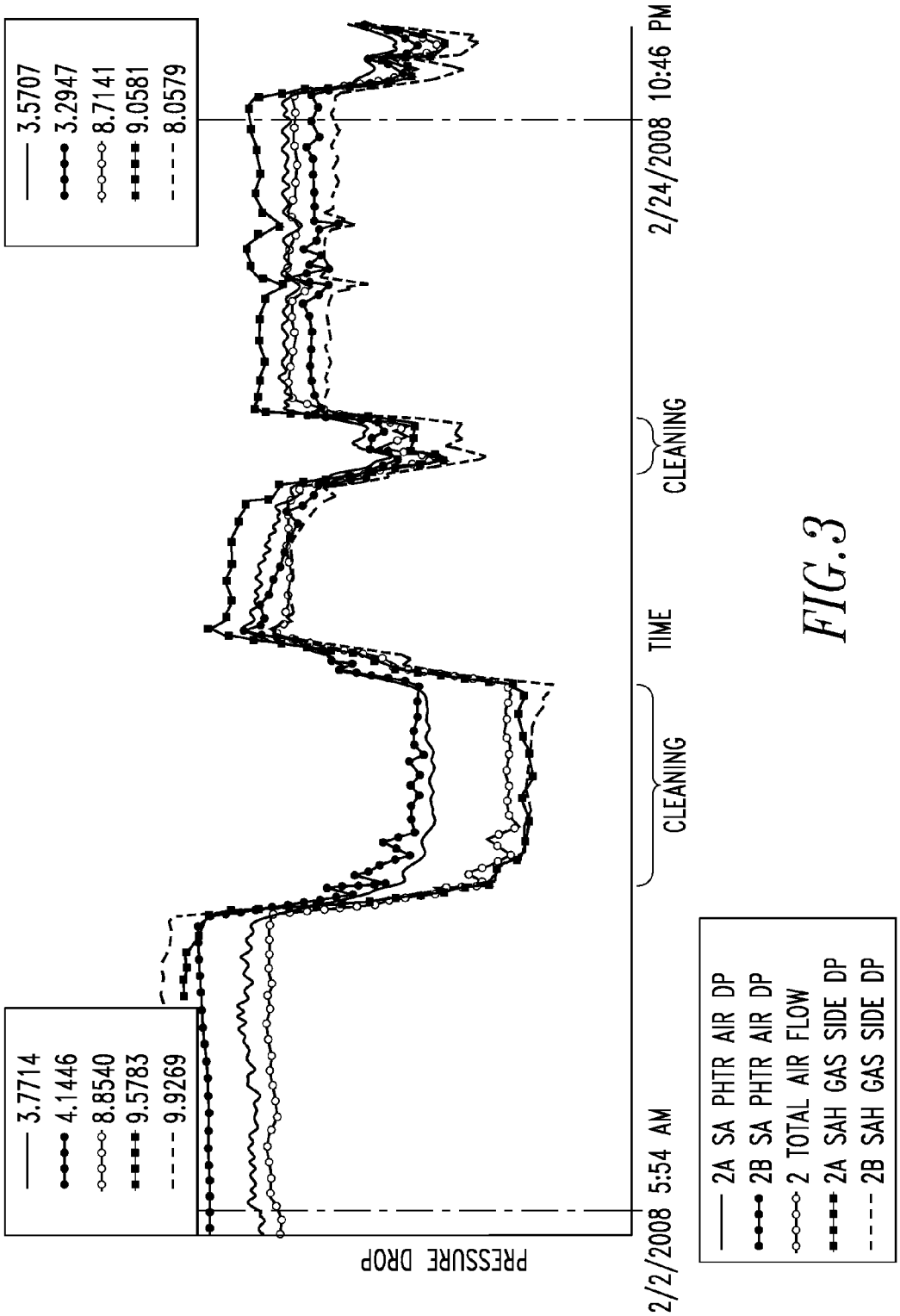
3.7714
4.1446
8.8540
9.5783
9.9269
3.5707
3.2947
8.7141
9.0581
8.0579
PRESSURE DROP
2/2/2008 5:54 AM
CLEANING
TIME
CLEANING
2/24/2008 10:46 PM
2A SA PHTR AIR DP
2B SA PHTR AIR DP
2 TOTAL AIR FLOW
2A SAH GAS SIDE DP
2B SAH GAS SIDE DP

FIG. 3

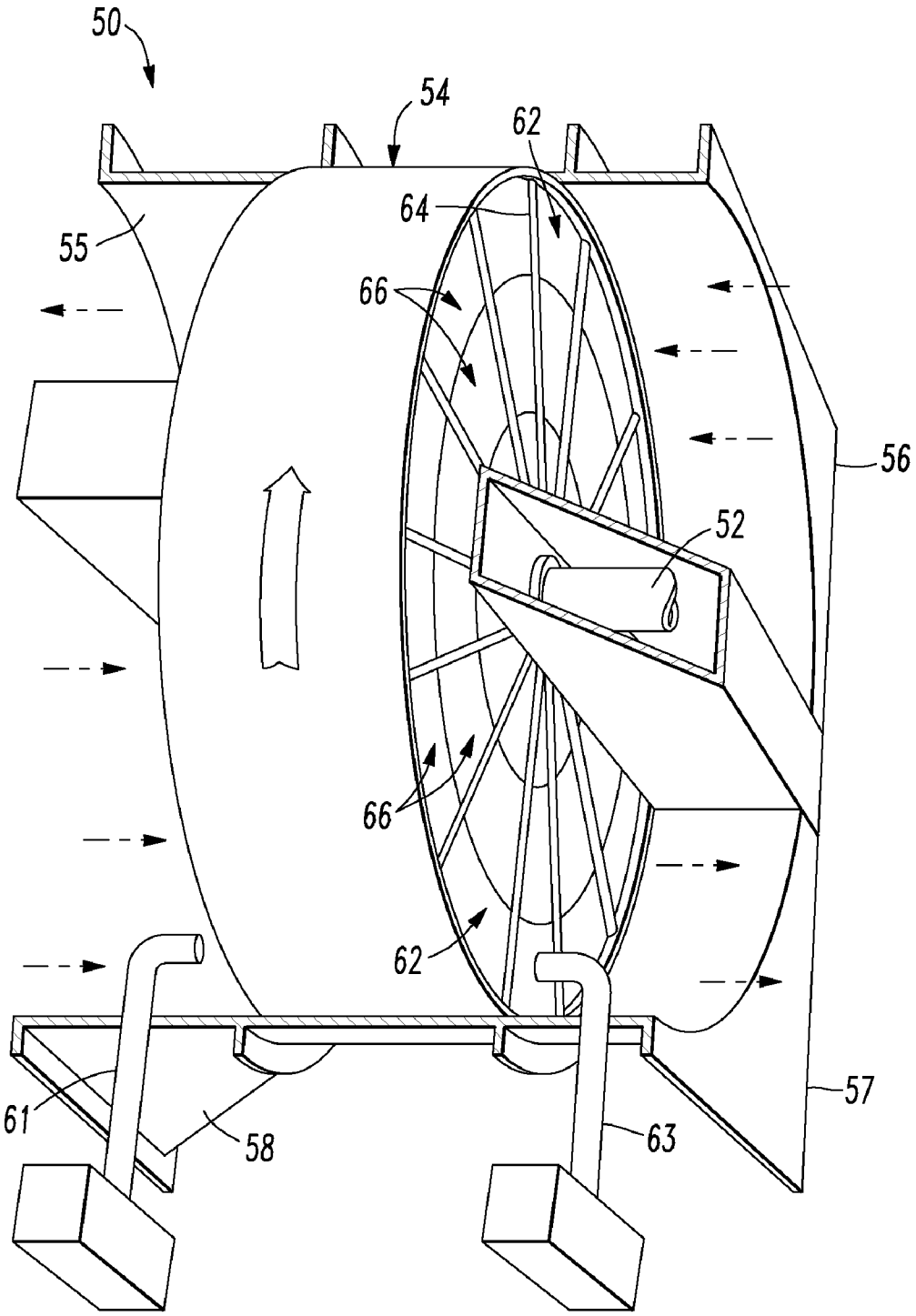

FIG. 4

METHOD FOR ONLINE CLEANING OF AIR PREHEATERS

FIELD OF THE INVENTION

[0001] The present invention is directed toward a method for cleaning rotating regenerative air heaters used in coal-fired electricity generating plants.

BACKGROUND

[0002] Techniques for preheating of air have been known and used for many years in connection with boilers to improve combustion and boiler efficiency. One such preheating technique employs a Ljungstrom air preheater. This air preheater has two side-by-side ducts with flue gas flowing through one duct while an inflow of combustion air is passed through the other duct, the two gas flows being in opposite directions. A rotor is positioned to rotate through both ducts about an axis between the two ducts, transferring heat from the flue gas to the combustion air. Air preheaters, are normally operated at sufficiently high temperatures to inhibit condensation inside the heat exchanger of pollutants such as sulfuric acid vapor present in the flue gas. For example, in typical published temperature guide lines for Ljungstrom air preheaters, the outlet flue gas temperature is maintained at least above 300 degrees F (149 degrees C), and as high as 350 degrees F (177 degrees C). At these temperatures, aerosol condensation of gaseous sulfuric acid and the associated corrosive effects on the preheater are minimized.

[0003] At lower temperatures, condensate, ash or other related materials from flue gases tend to deposit over a period of time on the heat transfer surfaces known in the industry as "baskets". As these deposits build up, the flow paths for the air and flue gas become blocked and the heat transfer capacity is reduced. Therefore, it is common for these air preheaters to include devices for blowing air or steam at high velocities into the rotor to dislodge the deposits. The industry refers to these devices as sootblowers.

[0004] Sootblowers for cleaning air heaters are generally of the "retractable" style or the "swing-arm" style. Advantages and disadvantages are found in both styles.

[0005] Swing arm style soot blowers for cleaning rotary regenerative air preheaters employ a swing-arm mounted for rotation through a set angle or arc with one or more nozzles at the end that blow the soot blowing medium (steam, air or water) onto the rotor as the rotor turns and as the swing-arm rotates through the arc. The soot blower is normally mounted on the cold end of the rotor which is the outlet end for the flue gas.

[0006] These soot blowers typically employ a drive mechanism which includes a worm gear and a worm wheel or chain drive which rotates a lever throw arm. A connecting link attaches the lever throw arm to a lever attached to the soot blower arm mounting plate. This linkage arrangement causes the lever and the soot blower mounting plate to reciprocate back and forth through an arc. This type of mechanism is disclosed in U.S. Pat. No. 6,065,528 to Fierle et al. In these systems, the swing-arm soot blower constantly changes speed or angular velocity as it sweeps across the rotor. At the beginning and end of its sweep, the velocity is zero with the maximum velocity being at the center of the sweep. Between the center of the sweep and the beginning and end, the velocity is constantly speeding up or slowing down due to the linkage arrangement. Therefore, the energy of the soot blowing medium is concentrated towards the two ends of the nozzle travel. This causes a more rapid deterioration of the heat exchange elements in the rotor usually toward the center and outside periphery of the rotor.

[0007] Retractable style sootblowers have found more common application in recent years due to their similarity to sootblowers used in other portions of the furnace and due to an improved ability to control their position in the cleaning process. Retractable sootblowers consist of two concentric tubes, one fixed in position and attached to a media source (air, steam, water, etc.) and the other capable of controlled movement into and out of the boiler ducts laterally along the same axis as the fixed tube. A packing material is placed between the inside surface of the outer tube and the outside surface of the inner tube at a the end of the movable tube closest to the media supply line. The end of the inner tube not connected to the cleaning media is open. The end of the outer tube furthest from the cleaning media line is enclosed by a rounded cap containing one or more outlet holes (or nozzles).

[0008] Cleaning media is introduced into the stationary tube from the media source line through a device called a popet valve. When the valve is opened, the cleaning media is introduced under pressure into the inside of the fixed tube allowing it to travel out the open outer end and into the volume of the outer tube. The packing material prohibits the media from exiting the assembly at the joining point and forces all of the media to travel the length of the outer tube to exit through the cleaning nozzle at the far end of the movable tube. By controlling the insertion depth of the movable tube, direct control of the cleaning point within the air heater surface if achieved.

[0009] Techniques for cleaning rotary heat exchangers have been described in the art. For example, Schoenherr, et al (U.S. Pat. No. 2,812,923) describe an apparatus which applies a cleaning liquid through ports in a sector plate above the heat exchanger and withdraws the liquid through slots in a sector plate located below the heat exchanger. Such devices have proven to be adequate for air preheater cleaning until recently.

[0010] In recent years, coal-fired power plants have been forced to install tail end systems to further reduce nitrogen oxides emissions. These processes inject ammonia or urea as the reducing agent. In one example of these emission control systems, the ammonia, which is introduced into the flue gas upstream of a catalytic reactor, reacts with nitrogen oxides in a catalytic reactor to form nitrogen (N_2) and water (H_2O). A small proportion of the ammonia which has been injected or introduced often remains in the flue gas downstream of the catalytic reactor. This effect is termed ammonia slippage. Ammonia slippage is essentially a function of the required degree of removal of nitrogen oxide, of the activity of the catalyst, and of the quality of mixing of the injected ammonia with the flue gas. It is also important for the flow through the reactor to be uniform by means of an even flue gas velocity at all locations of the reactor cross section and for it to be possible for all the catalytic converter material to be reached without obstacle.

[0011] On an industrial scale, these requirements can only be achieved to a limited extent with acceptable capital outlay. Consequently, it is inevitable that ammonia slippage may occur distributed unevenly across the cross-section of the reactor. On average, ammonia slippage amounts to only a few ppm. However, at some locations, levels which are a multiple

of this average may occur. This ammonia as well as sulfuric acid vapor will be contained in the flue gas entering the air preheater.

[0012] The temperature of the flue gas entering the air preheater is typically in the range of 600 to 750 degrees F (315 to 371 degrees C). In that temperature range, the sulfur oxides react with the ammonia from the ammonia slippage in accordance with the following equation: $NH_3+H_2O+SO_3 \rightarrow NH_4HSO_4$, i.e., to form ammonium bisulfate, or according to the equation: $2NH_3+SO_3+H_2O \rightarrow (NH_4)_2SO_4$, i.e., to form ammonium sulfate.

[0013] Inside the air preheater, the gas cools to the range of 230 to 350 degrees F (110 to 177 degrees C). In this temperature range, ammonium bisulfate, in addition to sulfuric acid, condenses as a sticky liquid on the air preheater baskets.

[0014] Because ammonium bisulfate is so sticky, it captures ash particles and rapidly plugs the gas passages of the device. These deposits may also cause corrosion. Hitherto, this problem has been counteracted by limiting the ammonia slippage to less than 5 ppm, and in some installations even to less than 2 ppm. This entails a correspondingly high outlay for the required catalytic reactor volume. Nevertheless, it is impossible to rule out the possibility of a higher level of ammonia slippage than the mean occurring at some locations over the reactor cross section. Therefore, in some cases a relatively high—even excessively high—ammonia concentration may occur, so that the air preheater is damaged in this area by the above-mentioned processes.

[0015] Soot blowers as mentioned above are seldom effective in removing ammonium bisulfate deposits. The deposits typically occur in the middle sections of the rotor where soot blower energy has dissipated before the deposit can be reached. The presence of deposits is evidenced by an increased pressure drop across the air preheater on both the air and the gas sides. When this occurs, the power generating unit must be shut down and the air preheater washed with high-pressure water.

SUMMARY OF THE INVENTION

[0016] The present invention is directed toward a method of cleaning those sticky deposits, including ammonium bisulfate, sulfuric acid and other materials, from a rotary air preheater without shutting down the steam generating system. Further, this method can be used to mitigate the accumulation of deposits to the point of pluggage by changing the operating strategy of conventional soot blowers. This method is particularly effective when used with the type of rotary air preheater shown in FIG. **1**. This type of preheater has a heat exchange rotor containing adjacent passageways through which air and flue gas are directed and which is rotated about an axis. A soot blower is capable of being positioned adjacent any selected depth from the outer circumference of the rotor such that a soot blowing medium can be blown from the soot blower into passageways at the selected depth as the rotor is rotated.

[0017] In a conventional preheater the rotor is rotated at a constant angular velocity. In the present method, the angular velocity of the rotor is changed during soot blowing according to the depth of the soot blower nozzle from the outer circumference of the rotor. Specifically the angular velocity is adjusted so that all of the passageways pass over the soot blower at the same or substantially the same tangential velocity.

BRIEF DESCRIPTION OF THE DRAWINGS

[0018] FIG. **1** is a perspective view showing the general arrangement of one type of air preheater with which the present invention may be used.

[0019] FIG. **2** is diagram of the air preheater and soot blower arrangement of FIG. **1** showing the motors and controller required to practice the present invention.

[0020] FIG. **3** is a graph showing the pressure drop (ΔP) across the air preheater on the air side and gas side before, during and after cleaning using high pressure water media.

[0021] FIG. **4** is a perspective view showing the general arrangement of a second type of air preheater with which the present invention may be used.

DESCRIPTION OF THE PREFERRED EMBODIMENTS

[0022] FIG. **1** is a perspective view of a typical air preheater in which flue gas travels in a vertical, up or down direction and is intended to illustrate one type of air preheater in which the present invention is used. The present invention may be applied to horizontal, vertical (cold end on the top) and vertical inverted (cold end on the bottom) air preheaters. FIG. **1** depicts a vertical air preheater with the cold end on the bottom. The air preheater comprises a rotor housing **12** in which is mounted the heat exchange rotor **14**. The rotor is mounted for rotation on the shaft **16** which extends between the upper center section **18** and the lower center section **20**. The rotor is divided into sectors or passageways **22** by the diaphragm plates **24** and heat exchange baskets **26** are stacked into these sectors **22**. Located at the top and bottom of the air preheater and attached to the rotor housing **12** and to the top and bottom center sections **18** and **20**, are the transition duct assemblies identified as **28**, **30**, **32** and **34**. These transition duct assemblies attach the air preheater to the ducting for the air supply to and the flue gas from a steam generator or other combustion equipment. For example, the flue gas may enter the air preheater through transition duct **28**, transfer the heat to the revolving rotor **14**, and exit through transition duct **30**. The combustion air enters through transition duct **32**, picks up the heat from the rotor **14** and exits through transition duct **34**. These transition ducts are constructed to make the transition between the generally circular air preheater and the rectangular power plant ducts.

[0023] One problem that is encountered with air preheaters is that the flue gas which is flowing through the rotor often contains particulate material and/or condensable substances which can be deposited on the heat transfer surfaces in the baskets **26**. This tends to clog up the air preheater, reduces the heat transfer efficiency and increases the demand on the induced draft fan. This problem is usually handled by providing soot blowing devices **13**, **15** which travel across the face of the rotor as it is revolving and blow steam, air or water onto the rotor and into the flow channels through the heat transfer surface to dislodge the deposits. Typically, there are two soot blowers, one located on the top (or hot end) of the air heater and the other located at the bottom (or cold end) as shown on FIG. **1**. If only one soot blower is used the soot blower is normally located at the cold end (the lower end of FIG. **1**) because most of the deposits occur at the cold end (exit of the flue gas).

[0024] Typically, the air preheater rotates in the range of ¾ to 4.0 revolutions per minute (RPM). When the boiler operator wants to clean the air heater, the soot blowers are inserted from the outer edge and slowly progress toward the center of the rotor. This procedure works with dust accumulations but often fails to dislodge all of the sticky liquid deposits.

[0025] The current invention allows complete cleaning regardless of the nature of the deposits. In the favored appli-

cation, the soot blower is fully inserted to the middle of the rotor with the air preheater rotating at its normal speed. Then the soot blower is retracted in a stepwise fashion. Each step can be any convenient measure, but the greatest success has been achieved with steps of 15 to 60 millimeters. At each step, the air preheater rotor RPM is adjusted such that the tangential velocity of the portion of the rotor which passes over the end of the soot blower is constant. When one complete revolution of the rotor at a specific sootblower position is complete, the sootblower steps (or indexes) to another location, stops, rotor speed is adjusted to match the new insertion depth and a complete rotor cycle is executed. Complete cleaning at any step may be evidenced by the high pressure spray from the bottom penetrating all the way to the top of the air heater when high pressure water is used as the cleaning media. The size of each step should be chosen according to visual observation or other means.

[0026] In a further advancement of this invention, a variable speed drive motor **40** (shown in FIG. **2**) controls rotor RPM and is programmed through the use of a controller **48** to automatically set the rotor RPM in proportion to the soot blower insertion distance. The controls would also specify a minimum RPM (typically 0.2 to 0.5 RPM) to prevent stalling the motor that drives the RPM. The minimum RPM can be different for each air heater, depending on whether it is rotating vertically or horizontally, the style and effectiveness of the support bearings and on the tightness in the sealing mechanisms. The controller may also control the motors **43**, **44** that advance and retract the soot blowers and may control the blower motor **46**.

[0027] Further, although two soot blowers (top and bottom) are normally required for complete cleaning, we have shown that only the bottom soot blower is needed when applying this method. Using only the bottom soot blower saves considerable cleaning time and also causes less wear and tear on the hot end basket material. In this manner the number of daily cleans has been shown to be reduced from 4 times per day to 1 or 2 times per day.

[0028] The benefits of the method are shown in the following example. The air preheater at a North Carolina electric generating station had fouled with ammonium bisulfate deposits to a point where the steam media blowers could not maintain acceptable pressure drop (ΔP) across the rotor. The boiler had to be removed from service every few months to water-wash the air preheaters. The hot end (top section) of these air preheaters is 29-inches thick, while the cold end (bottom section) is 41-inches thick. There are 10-inches of spacing above and below these sections where the soot blowers operate.

[0029] The power station has two air preheaters of the same size and construction that operate under substantially the same conditions. One preheater was cleaned using the present method while the other preheater was not cleaned. The rotor in the air preheater that was cleaned was modified to permit changes in the rotational speed of the rotor as directed by a controller. We programmed the controller to adjust the speed of the rotor in accordance with the present method. A soot blower was positioned opposite the innermost ring of passageways or sectors in the rotor and was activated to blow steam through the passageways as they moved over the soot blower. At this time, each rotor was turning at normal operating speed. The soot blower was then moved in step-wise fashion toward the outer ring of sectors or passageways. As the soot blower reached each successive depth, the speed of the rotor was slowed such that the angular velocity of the sectors was the same as the angular velocity of the sectors in the innermost depth when the process began. After all depths had been cleaned by the soot blower, the rotor speed was increased back to the normal operating speed at which the process began. Throughout the process the power station continued to operate normally. The speed of the rotor was 1.5 RPM when the process began and 0.33 RPM when the last ring was cleaned. The cleaning process took between 3 and 4 hours.

[0030] During the testing period the pressure drop across the rotor in the preheater being cleaned, which we identify as **2**B, was measured by a sensor on the flue gas side and a sensor on the combustion air side of the rotor. Sensors were similarly positioned on the rotor not being cleaned which we identify as **2**A. FIG. **3** shows the pressure drop (ΔP) across the air preheater on the air and gas sides before, during and after cleaning using high pressure water media. Steady operation with partially fouled air heaters is shown on the left side of this figure on Feb. 22, 2008. The air preheater was cleaned on line using this method twice during the period beginning on February 22 and ending on Feb. 24, 2008. During cleaning the boiler output was reduced which reduced the air flow through the preheaters.

[0031] FIG. **3** is a graph reporting the pressure drop across the combustion air side and the flue gas side of the air preheaters and the total airflow through the preheaters during a period from February 22 through 24, 2008. The legend in the lower right that identifies the location of the sensors. **2**A indicates an air preheater, the air preheater that was not cleaned. **2**B identifies a preheater that was cleaned. The pressure drop across the input air side of the preheater is identified as SH PHTR AIR DP. The pressure drop across the flue gas side of the preheater is identified as SAH GAS SIDE DP. During the cleaning periods the boiler load was reduced which lowered the total air flow through the preheaters. Consequently, total air flow is also shown in FIG. **3**. The actual pressure drop at each of the four sensor locations on Feb. 2, 2008 at 5:54 A.M. is given in the box at the upper left of FIG. **3**. The box in the upper right in FIG. **3** reports the pressure drop values at these same locations on Feb. 24, 2008 at 10:46 P.M. The significant information on the graph is not the peaks and valleys in the curve which correspond to boiler load and air flow, but the difference in pressure drop across the preheater which was cleaned the preheater which was not cleaned. Cleaning reduced the pressure drop from 4.1-inches of water to 3.3 inches of water, while the pressure drop on the uncleaned air preheater remained at 3.6-3.8 inches of water. Similarly, effective cleaning using this invention reduced the gas-side ΔP from 9.9 to 8.0 inches of water. The air preheater not cleaned maintained a ΔP of 9.0-9.6 inches of water.

[0032] The resulting benefits of implementing this invention at the reference station over the two years during which the present method was tested include elimination of two scheduled 36-hour outages per year for air heater washing. Inspections showed no damage to hot end surfaces. Ammonia reagent was increased to lower NO_x, emissions because more ammonia slip could be tolerated. Air preheater outlet gas temperature was reduced by minimizing the need for a bypass, thereby increasing boiler efficiency and reducing CO_2 emissions.

[0033] Although the present method was tested using a preheater of the type shown in FIG. **1** in which the gasses flow in a vertical direction, the method could also be used in a

horizontal flow preheater. Such a preheater is shown in FIG. **4**. In this type of preheater **50** the rotor **54** turns in a vertical plane on shaft **52** while the flue gas and the intake air flow in a horizontal direction through transition ducts **55**, **56**, **57** and **58**. The rotor is divided into sectors **62** by the diaphragm plates **64** and heat exchange baskets **66** are stacked into these sectors **62**. Soot blowers **61** and **63** are provided on the flue gas side of the preheater. The rotor **64** and soot blower or soot blowers **61** and/or **63** are operated so that all of the passageways pass over the soot blower at the same or substantially the same angular velocity.

[0034] We prefer that the passageways all travel at the same tangential velocity during cleaning. However, this may be difficult to achieve in some systems. The operator may find it easier to clean two or more adjacent depths without changing the speed of the rotor. This can be done and still achieve the benefits of our cleaning method. Therefore, a variance in tangential velocity of as much as fifteen percent is acceptable. If such a variance exists we would consider all the passageways to be traveling at substantially the same angular velocity.

[0035] While it may be preferable to clean every depth of passageways in the rotor, the present method does not require cleaning of every sector. For some installations it may be satisfactory to clean some but not all sectors in one pass of the soot blower. Then in another pass or at another time other sectors or passageways can be cleaned. Indeed, there may be some preheaters in which certain passageways are rarely or never cleaned.

[0036] Although we have described and illustrated certain present preferred embodiments of our method for online cleaning of air preheaters, our invention is not limited thereto, but can be variously embodied within the scope of the following claims.

We claim:

1. A method of cleaning air preheaters of the type comprised of a heat exchange rotor containing adjacent passageways of selected depths from an outer circumference of the rotor through which air and flue gas are directed and which is rotated about an axis and a soot blower capable of being positioned adjacent any selected depth such that a soot blowing medium can be blown from the soot blower into passageways of the selected ring as the rotor is rotated, the method comprised of:

positioning the soot blower adjacent passageways at a first depth;

rotating the rotor at a first selected speed so that each passageway at the first depth passes over the soot blower;

blowing a soot blowing medium through the passageways at the first depth while the rotor is being rotated at the first selected speed;

positioning the soot blower adjacent passageways at a second depth;

rotating the rotor at a second selected speed so that each passageway at the second depth passes over the soot blower;

blowing a soot blowing medium through the passageways at the second depth while the rotor is being rotated at the second selected speed; and

selecting the first speed and the second speed so that all of the passageways pass over the soot blower at a substantially same tangential velocity.

2. The method of claim **1** wherein the rotor contains at least one additional set of passageways at another selected depth and further comprising:

sequentially positioning the soot blower adjacent the passageways at another selected depth;

rotating the rotor at a selected speed for each additional set of passageways so that each passageway of that set passes over the soot blower;

blowing a soot blowing medium through the passageways in that additional set while the rotor is being rotated at the selected speed for that set of passageways; and

selecting all of the speeds so that all of the passageways pass over the soot blower at a substantially same tangential velocity.

3. The method of claim **1** wherein the soot blowing medium is air, water or steam.

4. The method of claim **1** wherein some, but not all passageways in the rotor are blown with soot blowing medium.

5. The method of claim **1** wherein the soot blower first blows soot blowing medium through an innermost depth of passageways.

6. The method of claim **1** wherein the soot blower first blows soot blowing medium through an outermost depth of passageways.

7. The method of claim **1** wherein passageways at two adjacent depths are blown with a soot blowing medium and the rotor turns at a same rotations per minute while all passageways are being blown.

* * * * *