Feb. 23, 1943. H. M. WARREN 2,311,717

DEVICE FOR HOLDING MULTIPLE-PART FORMS

Filed March 7, 1942

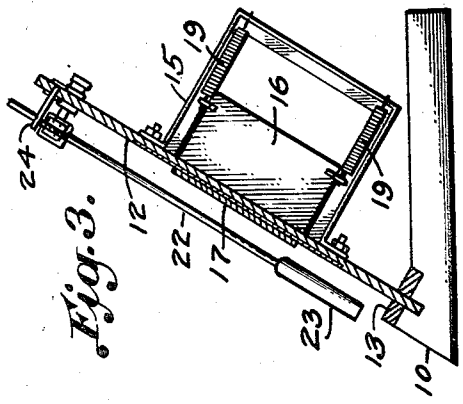

Fig. 3.

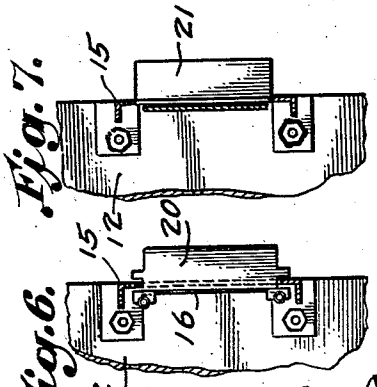

Fig. 7.

Fig. 6.

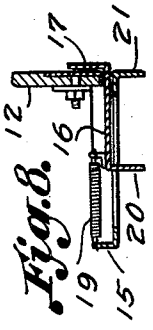

Fig. 8.

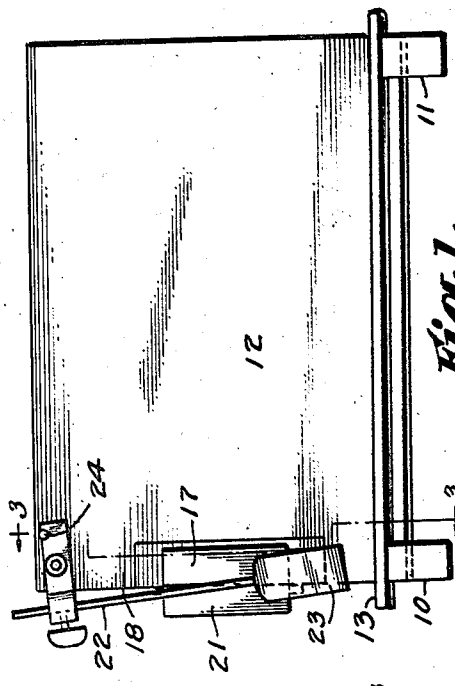

Fig. 1.

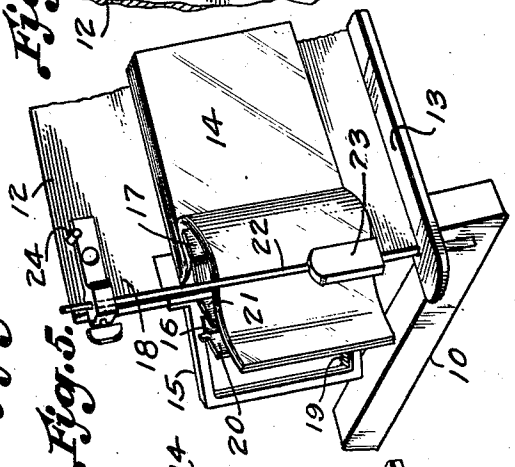

Fig. 5.

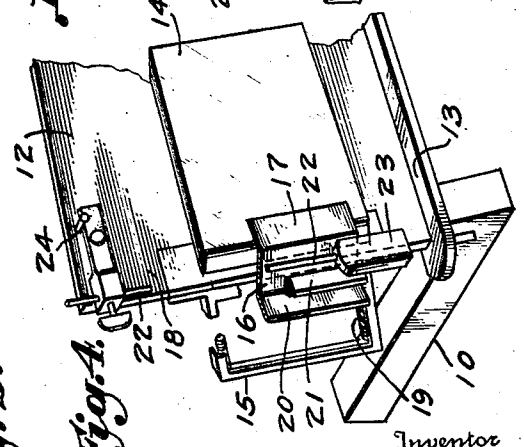

Fig. 4.

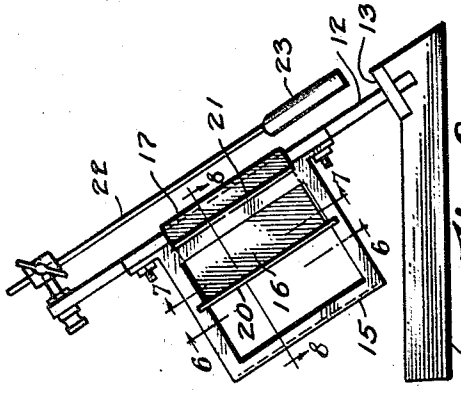

Fig. 2.

Inventor

Harold M. Warren

By J. J. Mothershead

Attorney

Patented Feb. 23, 1943

2,311,717

UNITED STATES PATENT OFFICE

2,311,717

DEVICE FOR HOLDING MULTIPLE-PART FORMS

Harold M. Warren, Salt Lake City, Utah

Application March 7, 1942, Serial No. 433,706

1 Claim. (Cl. 120—28)

(Granted under the act of March 3, 1883, as amended April 30, 1928; 370 O. G. 757)

The invention described herein may be manufactured and used by or for the Government of the United States for governmental purposes without the payment to me of any royalty thereon in accordance with the provisions of the act of April 30, 1928 (Ch. 460, 46 St. L. 467).

This invention relates to improvements in copy holders and aims to provide means whereby one or a plurality of superimposed sheets or pages may be secured in an upright manner and whereby one or a plurality of the secured sheets or pages may be held in an overturned position for the exposition of desired or successive sheets. The device is adapted for holding sheets or pages in bound-book form and is particularly suitable for securely holding a plurality of loose sheets in prearranged superimposed relation for reading, reference and copying purposes.

The foregoing and other objects of the invention will be apparent from a reading of the following specification and appended claim. An embodiment having the characteristics of the invention and by which the same may be practiced is illustrated in the accompanying drawing in which:

Figure 1 is a front elevational view of the assembly;

Figure 2, an end elevation thereof;

Figure 3, a cross sectional view taken at line 3—3 of Figure 1; and

Figure 4, a partial perspective of the assembly illustrating a stack or book of work clamped in original position, some of the elements being sectionalized to illustrate their formation and operative relationship.

Figure 5 is a view similar to that of Fgure 4 but llustrative of the operative position of the holding means; and

Figures 6, 7 and 8, sectionalized views taken on lines 6—6, 7—7 and 8—8 of the clamping means of the assembly as illustrated in Figure 2.

The embodiment illustrated in the drawing for the purpose of explaining the invention includes a pair of base members 10 and 11 upon which a workrest 12 is mounted, preferably with its face surface on an angle less than ninety degrees with respect to the bottom surfaces of the base members. Near the bottom of the workrest 12 there is provided a worksupport 13 which may suitably consist of a ledge or shelf-like member, projecting from the face of the workrest at substantially a right angle thereto. At one edge of the workrest, preferably the left, means are provided for releasably engaging an edge or end portion of the work 14 and clamping the same against the workrest.

In the embodiment illustrated the clamping means includes a guideway 15 secured to the workrest 12 at the left edge thereof and a guide 16 slidably carried by the guideway. The forward end of the guide 16 is provided with a compressor member 17 which projects over a left end marginal portion 18 of the face surface of the workrest. The compressor member 17 is constantly urged toward the face surface of the marginal portion 18 by means of a pair of springs 19 secured under constant tension between the guideway 15 and the guide 16. The slidable guide 16 is provided with a projecting member 20 and the fixed guideway is provided with a similar projecting member 21 intermediately of the projecting member 20 and the compressor member 17. The slidable and fixed projecting members 20 and 21 are adapted to be engaged between an operator's fingers and when manually compressed, the compressor member 17 is urged forward away from the face surface of the marginal portion 18 of the workrest 12 for the insertion or removal of work 14 between the compressor member 17 and surface 18, see Figure 4.

In order to hold a portion of the sheets of engaged work in overturned position, as shown in Figure 5, without removing or releasing the same from the clamp and in order to hold the work in open position to expose an intermediate page or sheet, I provide a fingerlike member 22 which is pivotally mounted above the work engaging surface of the workrest 12. The fingerlike member 22 is pivotally movable from a substantially vertical position in a clockwise direction sufficiently far as to clear the top of the work, for the turning of pages, and returnable to a substantially vertical position to hold overturned pages. The fingerlike member 22 is advantageously provided with a weight 23 which will automatically return the member into a page-holding position when released after having been manually lifted or brushed aside as the page is turned. To prevent the latter members from swinging as a pendulum and obstructing the view of the exposed page of the work, a stop 24 is provided to block the counterclockwise movement of the page holding means beyond a substantially vertical position.

In the operation of the device the projection 20 on guide 16 is urged toward the projection 21 on the guideway 15 by compressing the one toward the other and since the compressor member 17 is carried by the guide 16, it is freed from

contact with the surface of the marginal portion 18 for the insertion of work which will be engaged by the compressor member upon releasing the compression placed upon the projecting members 20 and 21. As a page of the work is turned, the pendulum may be brushed clockwise out of the way sufficiently for an overturning of the page and then allowed to swing back into holding position, as illustrated in Figure 5.

Having described my invention and illustrated an embodiment whereby the same may be practiced, what I claim is:

A copy holder comprising a tilted workrest as a back support for a plurality of bound or loose superimposed sheets or pages, a worksupport projecting shelflike from the face of said workrest as a support for work of the character named, work engaging means projecting over a marginal portion of said workrest, means normally urging said work engaging means toward said workrest marginal portion, means for manually moving said work engaging means reversely of its normally urged direction, and pivoted work holding means manually movable and pendulously returnable for the receipt, holding and removal of partially overturned portions of said work while engaged by said work engaging means.

HAROLD M. WARREN.