(19) Europäisches Patentamt
European Patent Office
Office européen des brevets

(11) **EP 4 582 757 A1**

(12) **EUROPEAN PATENT APPLICATION**

(43) Date of publication:
09.07.2025 Bulletin 2025/28

(21) Application number: **24150515.5**

(22) Date of filing: **05.01.2024**

(51) International Patent Classification (IPC):
F26B 21/00 *(2006.01)* ***F26B 21/14*** *(2006.01)*

(52) Cooperative Patent Classification (CPC):
F26B 21/14; F26B 21/001; F26B 21/004

(84) Designated Contracting States:
AL AT BE BG CH CY CZ DE DK EE ES FI FR GB GR HR HU IE IS IT LI LT LU LV MC ME MK MT NL NO PL PT RO RS SE SI SK SM TR
Designated Extension States:
BA
Designated Validation States:
KH MA MD TN

(71) Applicant: **Basell Polyolefine GmbH**
50389 Wesseling (DE)

(72) Inventors:
- **HERRMANN, Thomas**
  Frankfurt/M. 65926 (DE)
- **CHATTERJEE, Michael**
  65926 Frankfurt/M. (DE)
- **SEIFERT, Alexander**
  65926 Frankfurt/M. (DE)
- **JAFELD, Marco**
  65926 Frankfurt/M. (DE)
- **FELLMANN, Stefan**
  65926 Frankfurt/M. (DE)

(74) Representative: **LyondellBasell**
c/o Basell Polyolefine GmbH
Industriepark Hoechst, Bldg. E413
65926 Frankfurt am Main (DE)

(54) PROCESS FOR THE PREPARATION OF A DRIED POWDER WITH REDUCED PLUGGING

(57) A method for the preparation of a dried powder in a fluidized bed dryer is disclosed. The method is characterized by periodically carrying out a level decrease in which the height of the fluidized bed within the fluidized bed dryer is reduced to a basic height which is from 30% to less than 95%, preferably from 50% to 75% of the setpoint height. It has been surprisingly found that by periodically carrying out the level decrease, plugging and a reduction of heat transfer over time may be mitigated or even avoided.

EP 4 582 757 A1

Description

FIELD OF THE DISCLOSURE

[0001] In general, the present disclosure relates to field of chemistry. More specifically, the present disclosure relates to powders. In particular, the present disclosure relates to a method for preparing a dried powder from a mixture of diluent and powder.

BACKGROUND OF THE DISCLOSURE

[0002] Drying methods for powders include tray drying and fluidized bed drying. Fluidized bed drying has gained dominance in the field of powder drying due to an increased drying speed. In particular, fluidized bed drying provides controlled and uniform drying conditions.

[0003] Fluidized bed drying may have limitations. For example, a wet cake or slurry may not be readily fluidizable. In some instances and even when fluid consistency is achieved, the wet cake may not be fluidized entirely. As an associated problem, portions of the cake may plug openings or apertures in grids, thereby resulting in a built-up of wet material. Additionally, the non-fluidized portions may cover heating elements, thereby decreasing heating efficiency. Moreover, these problems can require system stoppages and cleaning. Also depending on the composition of the powder, cleanup may include treating elements of the system to render the surfaces inert. Furthermore, high temperatures may not be suitable for various powders. For example, if the powder to be dried comprises significant amounts of low molecular weight polyolefin species, which usually have a waxy consistency, fouling and ultimately thermal blocking of the heating panels may occur requiring inertizing and cleaning of the dryer, in particular the heating panel.

[0004] Thus, there is a constant need to find fast drying methods that require less cleaning cycles and to reduce costs.

SUMMARY OF THE DISCLOSURE

[0005] The present disclosure provides a continuous method for the preparation of a dried powder in a fluidized bed dryer, wherein the fluidized bed dryer comprises:

- At least one powder inlet for introducing a mixture of a powder to be dried and a liquid to be removed from the powder into the fluidized bed dryer,
- a perforated bottom for introducing a drying gas into the fluidized bed dryer;
- a powder outlet for discharging a dried powder from the fluidized bed dryer into a discharge line, the powder outlet being arranged at a predetermined height distanced from the perforated bottom at a downstream end of the fluidized bed dryer; and
- a lump outlet for removing powder agglomerates and lumps from the fluidized bed dryer, wherein the method comprises the following steps:
- introducing the mixture of the powder to be dried and the liquid to be removed from the powder through the at least one powder inlet into the fluidized bed dryer, thereby forming a fluidized powder bed within the fluidized bed dryer having a setpoint height;
- passing, within the fluidized bed dryer, the powder from the at least one powder inlet to the powder outlet and continuously or discontinuously discharging fluidized bed dryer powder agglomerates and lumps through the lump outlet, thereby maintaining the height of the fluidized bed within the fluidized bed dryer within a predetermined range of the setpoint height; and
- periodically carrying out a level decrease in which the height of the fluidized bed within the fluidized bed dryer is reduced to a basic height, which is lower than a lower limit of the setpoint height.

[0006] It has been surprisingly found that with the present method, decrease of the dryer performance over time can be significantly reduced. Consequently, shutdowns of the dryer for cleaning or replacing components of the dryer may be avoided and throughput of the dryer may be increased. The new operating mode is characterized by periodically lowering the height of the fluidized powder bed in the dryer. By lowering the height of the fluidized bed, lumps are accelerated and pushed towards the outlet. Thus, accumulation of lumps within the fluidized bed dryer is prevented.

[0007] Hereinafter, further developments are specified which are each themselves advantageous per se and can be combined with one independently from one another.

[0008] For example, in some embodiments, a closable discharge opening may be provided, the closable discharge opening leading into the discharge line. During the level decrease, the closable discharge opening may at least partially be opened during the level decrease. A pivotable flap or slider may be provided for closing the discharge opening. In normal operation the discharge opening may preferably be completely closed. For starting the level decrease, the discharge opening may gradually or stepwise be opened, allowing the lumps and powder to be pushed through the discharge opening into the discharge line.

[0009] In some embodiments, the powder outlet and the lump outlet may be the same entity. In such cases, the flow through the powder outlet/lump outlet may be determined by an adjustable closure, which may periodically increase and/or decrease the size of opening of the powder outlet/lump outlet. Preferably, the powder outlet and the lump outlet are two different entities.

[0010] In some embodiments, the lump outlet may be closed during the level decrease, allowing for a greater control. Preferably, the level decrease is performed by at least partially opening the discharge opening and keeping the lump outlet closed.

[0011] In some embodiments, the lump outlet is periodically opened during operation within 95 % of the setpoint height. The lump outlet may be constructed to collect lumps and periodically discharge the collected lumps by opening the lump outlet. For this, the lump outlet may comprise a flap or slider, which may be configured to open and close the lump outlet in a gradual, abrupt or stepwise manner.

[0012] The predetermined range may particularly be from 90% to 100% of the setpoint height, preferably from 93% to 100% of the setpoint height, more preferably from 95% to 100% of the setpoint height. Consequently, during "regular operation" low fluctuations occur and the dryer is operated at the setpoint height or close to the setpoint height. The fluctuations may be periodically opened during the "regular operation". "regular operation" within the meaning of this description refers to the operation within the first predetermined range. The periodical opening of the lump outlet as well as the manner how it is opened as well to which extend it is opened is well defined. Thus, the range to which the bed height drops relative to the setpoint height is predetermined during "normal operation".

[0013] In some embodiments, the material discharged via the discharge outlet and the material discharged via the lump outlet are combined together downstream of the fluidized bed dryer. Consequently, loss of material, i.e. the material which will be further processed for example in an extruder device, can be further minimized. In order to separate out lumps exceeding a predetermined size, a screen, such as a vibrating screen, may be provided downstream of the merging point between the lump outlet and the discharge line.

[0014] In some embodiments, the height of the fluidized bed powder bed within the fluidized bed dryer may be determined by measuring the pressure drop across the fluidized powder bed. For example, a pressure sensor may be provided right above the fluidization grid and the other pressure sensor may be installed in the gas space in the upper part of the dryer. The measured pressure drop is proportional to the bed height, allowing an exact control in a relative simple manner. Furthermore, an automatic control can be set up with respect to the measured pressure values.

[0015] During level decrease, the bed height may be reduced to from 30% to less than 95% of the setpoint height, preferably from 50% to 75% of the setpoint height. In some embodiments, the bed height may be reduced to from 75% to less than 95% of the setpoint height.

[0016] The level decrease interrupts the "normal operation" by reducing the bed height to a basic height which is lower than in the predetermined range, in particular lower than the lower limit of the predetermined range. Preferably the basic height is may be from 30% of the setpoint height to lower than 95% of the setpoint height, in particular from 50% to 75% of the setpoint height. By lowering the height of the fluidized bed, lumps are accelerated and pushed towards the outlet. Thus, accumulation of lumps within the fluidized bed dryer is prevented. However, if the height of the fluidized bed dryer is reduced too drastically, e.g. below 30 % of the setpoint height or even completely emptying the dryer, plugging of the dryer may occur leading to a shutdown of the plant.

[0017] In some embodiments, the level decrease may be initiated after a certain event occurs. The level decrease may for example be initiated manually or automatically. The powder dryer may for example comprise a window allowing an operator to see inside the powder dryer. If the operator identifies lumps through the window, the level decrease may be initiated. However, it has been found that a particularly stable operation may be achieved, if the level decrease is initiated regularly, in particular at a frequency of from two to 24 decreases per 24 hours.

[0018] In some embodiments, the level decrease may be carried out every two to four hours. The level decrease may be manually or preferably automatically initiated. The level decrease may particularly be computer implemented. For this a computer may be provided, the computer may comprise a detection unit, for detecting a signal received from the fluidized bed dryer. The signal may for example represent the pressure drop in the fluidized bed dryer. The signal unit may be connected to a computing unit, which converts the signal into a readable output. The output may be the value of the pressure drop which can be correlated to the bed height, or the computing unit may already correlate the pressure drop and directly output the bed height. The computer may further comprise a control unit, which controls the fluidized bed dryer, in particular the discharge opening and/or the lump outlet. The control unit may comprise a trigger for starting the level decrease. The trigger may be actuated manually upon command or may be set up to be activated at a predetermined interval.

[0019] In some embodiments, the level decrease may be carried out every two to four hours.

[0020] In some embodiments, the fluidized bed dryer may be divided into at least two subsequent dryer chambers, wherein the subsequent dryer chambers comprises a conveying device and a recirculation portion of the dried powder is transferred from the subsequent dryer chamber to the previous dryer chamber using said conveyor device and optionally a recirculation powder passage.

[0021] In some embodiments, the lump outlet may be formed as a chute extending from the bottom of the fluidized bed dryer. The chute may be arranged at the end of the fluidized bed dryer close to the powder outlet, i.e. adjacent to the downstream end of the fluidized bed dryer. In case the fluidized bed dryer comprises multiple dryer chambers, the chute may be arranged in the final dryer chamber.

[0022] The chute may particularly extend out of the fluidized bed dryer and may further comprise a flap or slider, which is configured to block the path of the powder particles through the chute. The flap or slider may particularly be configured to completely cover the inner area of the chute allowing a complete closure of the lump outlet. Preferably, the flap or slider is arranged in the chute at a portion, which is located outside the fluidized bed dryer. The flap or slider may be arranged to at least partially open the pathway through the chute at intervals, in particular regular intervals during regular operation within the predetermined range of the fluidized bed.

[0023] In some embodiments, the lump outlet may be opened during regular operation within the predetermined range of the setpoint height of the fluidized bed at regular intervals of every 5 to 50 minutes, preferably every 8 to 40 minutes, more preferably every 10 to 30 minutes.

[0024] In some embodiments, the time for reducing the height of the fluidized bed to the basic height may be shorter than the time for increasing the height of the fluidized bed from the basic height to at least the lower limit of the predetermined range.

[0025] The present disclosure further provides a process for the preparation of a polyolefin comprising the steps of

a) continuously polymerizing one or more olefin monomers in a diluent at temperatures of from 20°C to 200°C and pressures of from 0.1 to 20 MPa in the presence of a polymerization catalyst in one or more polymerization reactors,

b) yielding a slurry comprising solid polyolefin particles and a diluent,

c) mechanically separating the polyolefin particles from some of the diluent resulting in a mixture of polyolefin powder and diluent having a lower content of diluent than the slurry yielded in step b),

d) drying the mixture of polyolefin powder and diluent obtained in step c) by embodiments of the methods for the preparation of a dried powder.

BRIEF DESCRIPTION OF THE DRAWINGS

[0026] To assist those of ordinary skill in the relevant art in making and using the subject matter hereof, reference is made to the appended drawings, wherein:

Fig. 1 shows a schematic view of a method for preparing a polymer powder prior to the drying stage;

Fig. 2 shows an exemplary embodiment of a setup of a fluidized bed dryer for the preparation of a dried powder in accordance with the method of the present disclosure; and

Fig. 3 shows a plot of the specific vapor pressure in the heating panels of the first dryer chamber in mbar h/t is shown over time in months.

DETAILED DESCRIPTION OF THE DISCLOSURE

[0027] The fluidized bed dryer may particularly comprise at least two dryer chambers. For the preparation of a dried powder, a two chamber system is known in the art having a first and a separated second drying stage. Such a fluidized bed dryer is for example disclosed in WO 2017/140648 A1. The whole system is designed to prevent a mixing of powder from the first and second chamber. Therefore usually only a small opening is used to transfer a limited amount of comparatively wet powder from the first chamber to the second chamber comprising powder that is comparatively dry. The purpose of a two chamber system is to provide two stages of drying, e.g. a pre-drying stage and a final drying stage, which overall improves the drying efficiency. However, such a powder drier faces severe plugging resulting in substantial unplanned downtime. The plugging of the powder dryer may be caused by nuggets and/or lumps in the powder which accumulate at the bottom. and/or settle on the heating panels of the powder dryer. The accumulated nuggets and/or lumps may thus block the perforations and disturb the gas flow of the drying gas.

[0028] It should be understood that the use of "and/or" is defined inclusively, such that the term "a and/or b" should be read to include the sets "a and b", "a or b", "a", "b". Preferably and in most cases "a and/or b" relates to two entities "a" and "b", wherein at least one of said entities is present in the embodiments described.

[0029] It should be understood that the term powder relates to a multitude of solid particles that are capable of flowing in a dried state. However, the term does not necessarily relate to a specific consistency if powder is mixed with a diluent. If very little liquid is used, this will barely affect the properties of the powder. If more liquid is combined with the powder, a cake may be formed that is solid to some degree. If even more diluent is used, a slurry or suspension is formed. Preferably powder relates to a particulate material having a mean particle diameter of from 50 μm to 3000 μm.

[0030] It should be understood that the term "dried" or "drying" refers to the thermally assisted removal of a diluent, which may be any liquid, such as a hydrocarbon liquid or water. Preferably, the liquid is a hydrocarbon liquid.

[0031] It should be understood that the term "normal operation" or "regular operation" refers to the operation of the fluidized bed dryer within the predetermined range of the setpoint height. In particular, the predetermined range may be from 95% to 100% of the setpoint height.

[0032] It should be noted that "upper", "top" or "above" as well as "lower", "bottom" or "below" refers to the

arrangement of elements in the facility as assembled and as used and in accordance with the gravitational force of earth. Thus a bottom section is closer to the center of earth than a top section. This does not preclude a non-usable stage, wherein the arrangement deviates, e.g. during transportation of a disassembled facility to the installation site.

[0033] It should be understood that "fluidized" within the meaning of this disclosure refers to a regime, in which powder particles are carried above the perforated bottom in the upper section of the dryer by a fluidizing gas. As the skilled person in the art understands, fluidization includes four different regimes based on the transition velocity: single bubble, slugging bed, turbulent flow and fast fluidization regime.

[0034] It should be understood that the terms "lump", "nugget" and/or "powder agglomerates" referrer to powder particles having a relatively large diameter of from about 1 cm to about 20 cm, or between 2 cm to 12 cm, particularly between 3 cm and 8 cm.

[0035] The dryer chambers of the fluidized bed dryer comprise various inlets and outlets for feeding and withdrawing powder and gas to and from the respective dryer chamber. Each of these inlets and outlets can be a single inlet or outlet. It is however also possible that these inlets or outlets are constructed as a plurality of inlets and outlets. That means each of these inlets and outlets can be a combination of two, three, four or more of these inlets and outlets. In a preferred embodiment of the method of the present disclosure, the powder inlet is a combination of from two to eight powder inlets, more preferably from two to six powder inlets and especially from two to four powder inlets.

[0036] The first powder passage for transferring powder from the first into the second dryer chamber preferably is or comprises an aperture in a first wall of the first chamber. The first wall may be a mutual wall separating the first and second chamber, the first powder passage may be identical with the second powder inlet, i.e. relate to the very same aperture that functions as powder passage or part of the powder passage. However, it is also possible in one embodiment according to the present disclosure that the powder passage is formed by a tube or pipe having two endings that are forming the first powder outlet and second powder inlet. The powder passage can further also be formed by an intermediate chamber which is connected to the first powder inlet and the second powder outlet.

[0037] A number of heating panels are mounted in each dryer chamber for controlling the temperature in the fluidized bed dryer. Preferably 1 to 10, more preferably 3 to 7 heating panels may be mounted in each dryer chamber. The first dryer chamber may comprise less heating panels than the second dryer chamber. For example, the first dryer chamber may comprise 3 heating panels and the second dryer chamber may comprise 5 heating panels. In another exemplary embodiment, the first dryer chamber may comprise 6 heating panels and the second dryer chamber may comprise 7 heating panels.

[0038] The heating panels may for example comprise multiple lamellas or tubes which are heated by a heating fluid flowing through the tubes or are electrically heated. The tubes or lamellas may be packed in a regular distance from each other in the panel allowing the fluidizing gas and/or the wet powder to effectively come in contact with the surface of the tubes or lamellas for an effective heat transmission. However, it has been found that the gaps in the heating panels are susceptible to plugging , i.e. lumps and/or nuggets getting stuck in these gaps, which results in a reduction of the heat transfer efficiency. Furthermore, the polymeric material may cover the surface of the heating panels thus further reducing the heat transfer efficiency. The heating panels may for example be supplied with reduced steam. The heat fed to the panels may be controlled via the pressure of that steam which for example ranges from 0.05 to 0.9 barg. In order to maintain a constant temperature, of the gaseous stream leaving the dryer, the steam pressure should be increased over time to compensate for the loss of heat transfer efficiency. Once the maximum pressure is reached, the plant is shutdown, in order to clean the dryer and possibly replace the heating panels.

[0039] In the method of the present disclosure, the mixture of the powder to be dried and the liquid to be removed from the powder is introduced through the at least one powder inlet into the fluidized bed. Drying gas is further introduced through the perforated bottom into the fluidized bed dryer thereby forming a fluidized powder bed within the fluidized bed dryer, in particular the chambers of the fluidized bed dryer, the fluidized powder bed having a setpoint height. The powder is then passed within the fluidized bed dryer from the at least one powder inlet to the powder outlet, in particular the at least one powder inlet of the first chamber and the at least one powder outlet of the last chamber in a series of interconnected chambers. Powder is continuously or discontinuously discharged from the fluidized bed dryer from the at least one powder outlet, in particular the at least one powder outlet of the final chamber, while powder agglomerates and lumps are discharged through the lump outlet, thereby maintaining a height of the fluidized bed within the fluidized bed dryer within a first predetermined range of the setpoint height, in particularly within 95% to 100% of the setpoint height. In order to remove lumps or powder agglomerates, which have settled on the bottom or between lamellas of the heating panels, the present disclosure proposes to perform a level decrease.

[0040] It has been found that by periodically lowering the height of the fluidized powder bed in the dryer, lumps which have settled on the heating panels or which are accumulated on the bottom, were carried out of the dryer. However, if the bed is lowered too drastically, e.g. if the bed is lowered to a bed height of between 0 % to 30 % of the setpoint height, the dryer plugged and the plant might need to be shut down. With the process of the present

disclosure, the heat transfer ability keeps constant over a long time, which has not been observed before in the past. Consequently, the amount of shutdowns for cleaning the dryer or replacing the heating panels can be reduced, which results in an increase of production rate.

[0041] Preferably, the powder is a polymer powder. In particular polyolefins were found to be dried efficiently using the above method. In particularly preferred embodiments, the mixture of powder and liquid is a mixture of polyethylene and a hydrocarbon diluent or a mixture of polypropylene and a hydrocarbon diluent.

[0042] The method may be particularly preferred for drying bimodal or multimodal polyolefins whereby the terms bimodal and multimodal refer to the modality of the polymer composition, and thereby frequently to the modality of the molecular weight distribution. Such polymers can be obtained from polymerizing olefins in a cascade of two or more polymerization reactors under different reaction conditions. Thus, the "modality" indicates how many different polymerization conditions were utilized to prepare the polyolefin, independently whether this modality of the molecular weight distribution can be recognized as separated maxima in a gel permeation chromatography (GPC) curve or not. Frequently used in the art, and also used herein, the term multimodal can include bimodal. It was found that such bimodal or multimodal polyolefins usually require frequent cleanings of the facility and respond particularly well to the described procedure, i.e. the frequency of cleanings can be reduced to a greater degree than expected.

[0043] The average combined residence time of powder in the first and second dryer chamber may be less than 60 min, in particular less than 30 min. The required average combined residence time among other influences is affected by the temperatures of the heating panels, the speed of the gas flow and the type of the diluent.

[0044] The at least one powder outlet of the fluidized bed dryer may be arranged at a predetermined height away from the perforated bottom. For instance, the at least one powder outlet may be arranged at an upper half, upper third, upper quarter of the fluidized bed dryer. Thus, in normal operation, the setpoint height may be defined by the height of the at least one powder outlet.

[0045] For initiating the level decrease, a closable discharge opening may be provided, which is preferably closed during normal operation and at least partially opened during the level decrease. The closable discharge opening may be closed by a lid, flap or slider, which is configured to gradually or stepwise close and open the discharge opening. The discharge opening may open into the same discharge line into which the powder outlet discharges the powder, preventing loss of material during the level decrease. The discharge line may comprise a sieving unit, such as a vibrational screen, for separating the lumps from the dried powder.

[0046] The powder dryer further comprises a lump outlet for removing powder agglomerates and lumps from the fluidized bed dryer. The lump outlet may particularly be formed as a chute arranged at the downstream end of the fluidized bed dryer and extending out of the fluidized bed dryer. The chute may particularly collect lumps that form during operation and are no longer fluidized. The lumps fall into the chute, which may further downstream open into the discharge line combining the lumps with the dried powder from the powder outlet. However, the chute may comprise a closure such as a lid, flap or slider, which is configured to close the chute, preventing constant discharge into the discharge line and loss of pressure inside the fluidized bed dryer. The closure may preferably be arranged outside the inner volume of the fluidized bed dryer and upstream of the point at which the chute merges into the discharge line.

[0047] The lump outlet is implemented to remove lumps from the fluidized bed dryer during normal operation. For this, the closure may be opened at predetermined intervals such as every 5 to 50 minutes, preferably every 8 to 40 minutes, more preferably every 10 to 30 minutes which would lead to a drop of the setpoint height within the predetermined range, e.g. from 100 % to around 95 %. However, during the level decrease, it is preferred that the lump outlet remains closed.

[0048] The present disclosure further provides a process for the preparation of a polyolefin comprising the steps of

a) continuously polymerizing one or more olefin monomers in a diluent at temperatures of from 20°C to 200°C and pressures of from 0.1 to 20 MPa in the presence of a polymerization catalyst in one or more polymerization reactors,

b) yielding a slurry comprising solid polyolefin particles and a diluent,

c) mechanically separating the polyolefin particles from some of the diluent resulting in a mixture of polyolefin powder and diluent having a lower content of diluent than the slurry yielded in step b),

d) drying the mixture of polyolefin powder and diluent obtained in step c) by the method as described above.

[0049] It was found that polyolefins obtained under the above reaction conditions and mechanically separated from the diluent according to step c), are particularly well dried using the method at hand.

[0050] The polyolefins can be homopolymers or copolymers of olefins and of 1-olefins, i.e. hydrocarbons having terminal double bonds, without being restricted thereto. Preferred monomers are nonpolar olefinic compounds, including aryl-substituted 1-olefins. Particularly preferred 1-olefins are linear or branched C_2-C_{12}-1-alkenes, in particular linear C_2-C_{10}-1-alkenes such as ethylene, propylene, 1-butene, 1-pentene, 1-hexene,

1-heptene, 1-octene, 1-decene or branched C_2-C_{10}-1-alkenes such as 4-methyl-1-pentene, conjugated and nonconjugated dienes such as 1,3-butadiene, 1,4-hexadiene or 1,7-octadiene or vinylaromatic compounds such as styrene or substituted styrene. It is also possible to polymerize mixtures of various 1-olefins. Olefins may also include ones in which the double bond is part of a cyclic structure which can have one or more ring systems. Examples are cyclopentene, norbornene, tetracyclododecene or methylnorbornene or dienes such as 5-ethylidene-2-norbornene, norbornadiene or ethylnorbornadiene. It is further possible to polymerize mixtures of two or more olefins.

[0051] The polymerization process is in particular a process for preparing homopolymers or copolymers of ethylene or propylene. As comonomers in propylene polymerization, preference is given to using up to 40 wt.% of ethylene and/or 1-butene.

[0052] In a preferred embodiment, the process of the present disclosure refers to preparing a polyolefin obtained by homopolymerizing or copolymerizing ethylene. Particular preference is given to preparing polyethylenes in which ethylene is copolymerized with up to 40 wt.% of C_3-C_8-1-alkenes, preferably 1-butene, 1-pentene, 1-hexene, 1-octene, or mixtures thereof. Particular preference is given to a process in which ethylene is copolymerized with up to 20 wt.% of 1-butene, 1-hexene, or mixtures thereof.

[0053] The process of the present disclosure may be employed for drying all types of common polyolefins. The polyolefins can be prepared by all industrially known low-pressure polymerization methods carried out in the presence of a diluent. This includes solution and suspension or slurry processes conducted at temperatures in the range from 20 to 200°C, preferably from 30 to 150°C and particularly preferably from 40 to 130°C, and under pressures of from 0.1 to 20 MPa and particularly preferably from 0.3 to 5 MPa. The polymerization can be carried out batchwise or preferably continuously in one or more stages. Processes of this type are generally known to those skilled in the art. The polymerization of the present disclosure is preferably carried out in slurry, in particular in loop reactors or stirred tank reactors. That means, the polymerization takes place in a medium, the so-called suspension medium, which is in liquid or in supercritical state under the conditions in the respective polymerization reactor and in which the produced polyolefin is insoluble and forms solid particles. The solids content of the slurry is generally in the range of from 10 to 60 wt.-%, preferably in the range of from 20 to 40 wt.-%.

[0054] The suspension medium, which forms the liquid or supercritical phase of the slurry, commonly comprises as main component a diluent but also comprises further components like, for example, solved monomers or comonomers, solved cocatalysts or scavengers like aluminum alkyls, solved reaction auxiliaries like hydrogen or solved reaction products of the polymerization reaction like oligomers or waxes. Diluents should be inert, i.e. should not decompose under reaction conditions. Such diluents are for example hydrocarbons having from 3 to 12 carbon atoms, and in particular saturated hydrocarbons like isobutane, butane, propane, isopentane, pentane, hexane or octane, or a mixture of these. It is also possible to use unsaturated hydrocarbons such as monomers themselves like propylene as diluent. The diluent preferably has a boiling point which is significantly different from those of the monomers and comonomers used in order to make it possible for these starting materials to be recovered from a mixture by distillation. Such diluents are for example hydrocarbons having a boiling point above 40°C or even above 60°C or mixtures comprising a high proportion of these hydrocarbons. Thus, the process of the present disclosure is especially advantageous if the polymerization takes place in a liquid suspension medium comprising more than 50 wt.% of saturated hydrocarbons having a boiling point of above 60°C at 0.1 MPa or even comprising more than 80 wt.-% of saturated hydrocarbons having a boiling point of above 60°C at 0.1 MPa.

[0055] In a preferred embodiment of the present disclosure, the polymerization is carried out in a cascade of at least two polymerization reactors which are connected in series. These reactors are not restricted to any specific design; preferably these reactors are however loop reactors or stirred tank reactors. There is no limit to the number of reactors of such a cascade, however preferably the cascade consist of two, three or four reactors and most preferably of two or three reactors. If a cascade of polymerization reactors is used in the process of the present disclosure the polymerization conditions in the polymerization reactors can differ, for example by the nature and/or the amount of comonomers or by different concentrations of polymerization auxiliaries such as hydrogen.

[0056] A further preferred slurry polymerization process is slurry polymerization in loop reactors, where the polymerization mixture is pumped continuously through a cyclic reactor tube. As a result of the pumped circulation, continual mixing of the reaction mixture is achieved and the catalyst introduced and the monomers fed in are distributed in the reaction mixture. Furthermore, the pumped circulation prevents sedimentation of the suspended polymer. The removal of the heat of reaction via the reactor wall is also promoted by the pumped circulation. In general, these reactors consist essentially of a cyclic reactor tube having one or more ascending legs and one or more descending legs which are enclosed by cooling jackets for removal of the heat of reaction and also horizontal tube sections which connect the vertical legs. The impeller pump, the catalyst feed facilities and the monomer feed facilities and also the discharge facility, thus normally the settling legs, are usually installed in the lower tube section. However, the reactor can also have more than two vertical tube sections, so that a meandering arrangement is obtained.

[0057] Preferably, the slurry polymerization is an ethy-

lene polymerization carried out in the loop reactor at an ethylene concentration of at least 5 mole percent, preferably 10 mole percent, based on the suspension medium. In this context, suspension medium does not mean the fed suspension medium such as isobutane alone but rather the mixture of this fed suspension medium with the monomers dissolved therein. The ethylene concentration can easily be determined by gas-chromatographic analysis of the suspension medium.

[0058] The polymerization can be carried out using all customary olefin polymerization catalysts. That means, the polymerization can be carried out using Phillips catalysts based on chromium oxide, using titanium-based Ziegler- or Ziegler-Natta-catalysts, or using single-site catalysts. For the purposes of the present disclosure, single-site catalysts are catalysts based on chemically uniform transition metal coordination compounds. Particularly preferred single-site catalysts are those comprising bulky sigma- or pi-bonded organic ligands, e.g. catalysts based on mono-Cp complexes, catalysts based on bis-Cp complexes, which are commonly designated as metallocene catalysts, or catalysts based on late transition metal complexes, in particular iron-bisimine complexes. Furthermore, it is also possible to use mixtures of two or more of these catalysts for the polymerization of olefins. Such mixed catalysts are often designated as hybrid catalysts. The preparation and use of these catalysts for olefin polymerization are generally known.

[0059] Preferred catalysts are of the Ziegler type preferably comprising a compound of titanium or vanadium, a compound of magnesium and optionally a particulate inorganic oxide as support.

[0060] The polyolefins are usually obtained as powder that means in form of small particles. The particles which have usually a more or less regular morphology and size, depending on the catalyst morphology and size, and on polymerization conditions. Depending on the catalyst used, the particles of the polyolefin powder usually have a mean diameter of from a few hundred to a few thousand micrometers. In the case of chromium catalysts, the mean particle diameter is usually from about 300 to about 1600 μm, and in the case of Ziegler type catalysts the mean particle diameter is usually from about 50 to about 3000 μm. Preferred polyolefin powders have a mean particle diameter of from 100 to 250 μm. The particle size distribution can, for example, advantageously be determined by sieving. Technics are e.g. vibrating sieve analysis or sieve analysis under an air jet.

[0061] Preferred polyolefins for preparing the polyolefin compositions of the present disclosure are polyethylenes having an ethylene content of from 50 to 100 wt.%, more preferably from 80 to 100 wt.%, and in particular from 98 to 100 wt.%. Accordingly, the content of other olefins in the polyethylenes is preferably from 0 to 50 wt.%, more preferably from 0 to 20 wt.%, and in particular from 0 to 2 wt.%.

[0062] The density of preferred polyethylene compositions obtained by the process of the present disclosure is from 0.90 g/cm^3 to 0.97 g/cm^3. Preferably the density is in the range of from 0.920 to 0.968 g/cm^3 and especially in the range of from 0.945 to 0.965 g/cm^3. The density has to be understood as being the density determined according to DIN EN ISO 1183-1:2004, Method A (Immersion) with compression molded plaques of 2 mm thickness which were pressed at 180°C, 20MPa for 8 minutes with subsequent crystallization in boiling water for 30 minutes.

[0063] The process of the present disclosure is especially preferred for the preparation of polyethylenes having a $MFR_{21.6}$ at a temperature of 190°C under a load of 21.6 kg, determined according to DIN EN ISO 1133:2005, condition G, of from 0.5 to 300 g/10 min, more preferably of from 1 to 100 g/10 min, even more preferably of from 1.2 to 100 g/10 min and especially of from 1.5 to 50 g/10 min.

[0064] Further features and advantages of the present disclosure will become apparent from the following description, in which exemplary embodiments of the disclosure are explained with reference to schematic drawings, by way of example and without limiting the disclosure.

[0065] Figure 1 shows a preferred embodiment of the process for preparing polyolefins, prior to the application of the drying method in accordance with the present disclosure. The diluent for polymerizing the olefins in the first polymerization reactor (1) in slurry is fed to the reactor via feeding line (2) while the other components of the reaction mixture like catalyst, monomer, possible comonomers and polymerization auxiliaries are fed to the reactor via one or more feeding lines (3). As result of the polymerization in reactor (1) a slurry of solid polyolefin particles in a suspension medium is formed. This slurry is fed via line (4) to the second polymerization reactor (5) where further polymerization occurs. Fresh comonomer or further components of the reaction mixture can be fed to reactor (5) via one or more feeding lines (6). The slurry of reactor (5) is thereafter fed via line (7) to the third polymerization reactor (8) in which additional polymerization is carried out. One or more feeding lines (9) allow supplementary feeding of comonomer or further components of the reaction mixture to reactor (8). The slurry of solid polyolefin particle in the suspension medium formed in reactor (8) is continuously transferred via line (10) to moderating vessel (11), which is operated in a way that the mean residence time is about 20 min. The content of moderating vessel (11) is withdrawn by means of pump (12) via line (13), passed through heat exchanger (14) and transferred to collecting vessel (15). For cooling the slurry in moderating vessel (11), which is required since on the one hand slurry of a higher temperature is continuously added through line (10) and on the other hand to remove the heat of the after-polymerization, which takes place in moderating vessel (11), it is possible to evaporate a part of the suspension medium and remove the generated gas via line (16) and to return a part of the slurry cooled in heat exchanger (14) via line (17) back to moderating vessel (11). To regulate the cooling or to

suppress one or both of them, lines (16) and (17) are equipped with valves (18) and (19). The slurry is then passed via line (20) to centrifuge (21), where the solid polyolefin particles are separated from the liquid suspension medium. The isolated polyolefin particles, which after mechanical removal of the liquid suspension medium still have from 10 to 40 wt.-% of residual moisture, i.e. of residual diluent, are conducted via line (22) to a dryer and dried in accordance with the method of the present disclosure. The isolated suspension medium is transferred via line (23) to a collecting vessel (24) and from there by means of pump (25) via line (26) to polymerization reactors (1), (5) and/or (8). Line (26) and its branch-offs are equipped with valves (27), (28) and (29).

[0066] Fig. 2 shows an exemplary embodiment of a fluidized bed dryer (99) for the preparation of a dried powder in accordance with the method at hand. The fluidized bed dryer (99) comprises a first chamber (100) with a first upper end section (106) an opposing first lower end section (108) and a first chamber side wall (122). The first upper end section (106) and the first lower end section (108) are separated by a first perforated bottom (118). Furthermore, the first dryer chamber (100) comprises first heating panels (116), a first powder inlet (104), which forms the powder inlet of the fluidized bed dryer, a first powder outlet that is formed by the first powder passage, which is formed as an aperture (114) in the first chamber side wall (122). Fluidizing gas for fluidizing the powder in the first chamber (100) may enter through a first gas inlet (110) at the bottom of the fluidizing bed dryer and leave through the first gas outlet (112) at the top of the dryer.

[0067] The first powder passage leads to a second dryer chamber (101), the second dryer chamber (101) comprising a second upper end section (107), an opposing second lower end section (109), which are separated from one another by a first perforated bottom (119). The first dryer chamber and the second dryer chamber are separated from one another by the first chamber side wall (122). The second dryer chamber (101) comprises second heating elements in the form of heating panels (117). The second dryer chamber (101) is the final dryer chamber of this exemplary dryer (99) and further comprises a second gas inlet (111) through which the fluidizing gas enters below second perforated bottom, and a second gas outlet (113). The first powder passage, which is an aperture (114) through which more powder is transferred from the first into the second dryer chamber than from the second into the first dryer chamber, is provided by way of the first powder outlet that is identical with the second powder inlet. According to the method a mixture of powder and fluid, in particularly diluent is introduced through the first powder inlet (104) into the heated first dryer chamber (100) and the pre-dried powder is transferred into the heated second dryer chamber (101) through the first powder passage (114). most of the diluent is removed from the powder by evaporation in the first and second dryer chambers (100, 101), using a first gas flow (not shown) that enters the first chamber through the first gas inlet (110) and exits the first chamber (100) through the first gas outlet (112) and a second gas flow (not shown) that enters the heated second chamber (101) through the second gas inlet (111) and exits the second chamber through the second gas outlet (113). The powder is dried above the first perforated bottom (118) in the first chamber (100) and above a second perforated bottom (119) in the second chamber (101). The gas flows penetrate through the respective grids (118, 119) and take up evaporated diluent that is carried out of the chamber by way of the respective gas outlets (112, 113).

[0068] The dried powder may exit the fluidized bed dryer (99) through the second powder outlet (124) into a discharge line (130). The second powder outlet (124) may particularly be arranged at a height distanced from the perforated bottom (119). Thus, only powder particles that are small enough to be fluidized by the fluidizing gas can be discharged via the powder outlet. A lump outlet (132) may be provided for removing lumps from the fluidized bed dryer. In order to prevent wet lumps to be removed from the fluidized bed dryer (99), the lump outlet (132) may be provided proximal to the downstream end of the dryer (99). Preferably, the lump outlet (132) is arranged proximal to the downstream end of the second dryer chamber (101). "Proximal to a downstream end" means that the powder outlet is located in the last 50%, preferably last 30% more preferably last 10% of the horizontal length.

[0069] The lump outlet (132) is formed as a chute (134) which opens at the perforated bottom such that the lumps which have reached the lump outlet (132) may be collected in the chute. The opening of the lump outlet (132) may preferably be arranged flush with an upper surface of the perforated bottom. Consequently, edges, where the lumps may accumulate can be avoided The chute (134) extends out of the fluidized bed dryer (99), in particular out of the second lower end section (109). Outside the fluidized bed dryer (99) the chute (134) is closed by a closure (136), which can be formed as a pivotable latch or a slider. In the closed state, passing through of the collected lumps is prevented. The closure may be periodically opened during normal operation, which leads to the release of the lumps collected in the chute and a small drop of the bed height within a predetermined range of the setpoint height. The bed height may for example drop from 100% to around 95% of the setpoint height. Preferably the closure is opened for about 10 to 50 seconds, preferably from 20 to 40 seconds, most preferably from 25 to 35 seconds every 5 to 40 mins, preferably every 10 to 30 minutes during normal operation.

[0070] The lump outlet may open into the discharge line (130) combining the discharged lumps with the discharged powder. As not only lumps but also powder may be discharged through the lump outlet, loss of material can be prevented. Downstream of the merging section, the discharge line may comprise a sieving unit (not shown), such as a vibrational screen, which separates

the lumps from the powder.

[0071] A portion of the powder in the second dryer chamber (101) may be transferred back into the first dryer chamber (100) by a conveyor (302) via line (300). In particular, the portion of the powder may be collected from the second dryer chamber (101) at a position (308) distal from the downstream end of the second dryer chamber (101). The conveyor (302) transports the powder to the first powder inlet (104). The powder leaves the conveyor (302) through an exit (304) and travels along a pathway (306) into the first chamber (100). In the example of Fig. 2, the pathway (306) is downward and powder travels along the pathway due to gravitational force. However, it is also possible that the conveyor (302) is directly connected to the first chamber (100) in a way that the powder is falling directly into the first chamber (100) without pathway (306) and it is possible to place the exit (304) adjacent to the first powder inlet (104).

[0072] Furthermore, a closable discharge outlet (138) may be provided, the discharge outlet (138) opening into the discharge line (130) and being arranged between the perforated bottom (119) and the powder outlet (124). The discharge outlet (138) may be closed by a second closure (140), which may be in the form of a pivotable flap or a slider and may particularly be opened in a gradual or stepwise manner.

[0073] According to the method of the present disclosure, the discharge outlet (138) is periodically opened, thereby lowering the bed height to a basic height which is lower than a lower limit of the predetermined range. The basic height may for example be any value from 30% to less than 95% of the setpoint height, preferably from 50% to 75% of the setpoint height.

[0074] The height of the bed may be measured by differential pressure, i.e. one pressure sensor records the pressure right above the perforated bottom and the other in a gas space in the upper part of the dryer. The pressure drop over the bed is proportional to the bed height.

[0075] By lowering the height of the bed, in particular in the second dryer chamber, lumps are carried out of the dryer. By lowering the height in the second dryer chamber also the first dryer chamber is emptied and the bed height decreases.

[0076] During level decrease, the bed height may be reduced to from 30% to less than 95% of the setpoint height, preferably from 50% to 75% of the setpoint height. In some embodiments, the bed height may be reduced to from 75% to less than 95% of the setpoint height.

[0077] In some embodiments, the level decrease may be initiated after a certain event occurs. The level decrease may for example be initiated manually or automatically. The powder dryer may for example comprise a window allowing an operator to see inside the powder dryer. If the operator identifies lumps through the window, the level decrease may be initiated. However, it has been found that a particularly stable operation may be achieved, if the level decrease is initiated regularly, in particular at a frequency of from two to 24 decreases per 24 hours.

[0078] In some embodiments, the level decrease may be carried out every two to four hours. The level decrease may be manually or preferably automatically initiated. The level decrease may particularly be computer implemented. For this a computer may be provided, the computer may comprise a detection unit, for detecting a signal received from the fluidized bed dryer. The signal may for example represent the pressure drop in the fluidized bed dryer. The signal unit may be connected to a computing unit, which converts the signal into a readable output. The output may be the value of the pressure drop which can be correlated to the bed height, or the computing unit may already correlate the pressure drop and directly output the bed height. The computer may further comprise a control unit, which controls the fluidized bed dryer, in particular the discharge opening and/or the lump outlet. The control unit may comprise a trigger for starting the level decrease. The trigger may be actuated manually upon command or may be set up to be activated at a predetermined interval.

[0079] In some embodiments, the level decrease may be carried out every two to four hours.

Examples

[0080] In a fluidized bed dryer having two dryer chambers, a high density polyethylene powder with a loading of around 20 to 35 wt% diluent, in this case hexane, based on the weight of the high density polyethylene powder is introduced into the powder dryer with a throughput of around 20 to 42 t/h. Within the fluidized bed dryer, the powder is dried to a loading of 0.1 wt% diluent with hot nitrogen gas introduced through the gas inlets. The powder is introduced via one to four powder inlets with a temperature of around 45°C and leaves the dryer with a temperature of 80 to 90°C. Nitrogen is introduced with a flow of around 12000 to 15000 kg/h in each dryer chamber which is jetted into the upper end section via the perforated bottoms. Nitrogen is introduced into the first dryer chamber at a temperature of between 90 to 115 °C at a pressure of around 0.25 barg. The nitrogen may leave the first drying chamber with a temperature of between 70°C and 120°C, preferably between 72°C and 80°C. The nitrogen may leave the second drying chamber with a temperature of between 70°C and 120°C, preferably between 80°C and 95°C. In the dryer chambers, further heat is generated by the heating panels, which are supplied by saturated steam. The temperature of the heating panels may be controlled by the vapor pressure of the steam. The vapor pressure ranges between 0.05 to 0.9 bar.

[0081] The height of the fluidized bed is measured via the pressure differential in the dryer chamber. For this, the pressure is measured just above the perforated bottom and in the gas area above the fluidized bed. The bed

height in the second dryer chamber corresponds to around 0.085 bar, which is the setpoint height. In the first dryer chamber the bed height corresponds to 0.075 bar, which can be set via the differential pressure in the first and second dryer chambers, which is around 0.01 to 0.02 bar.

[0082] The heat requirement of the dryer for reaching the dryer temperatures and thus the diluent content of the dried powder is dependent on the product type and the throughput. However, due to deposits of the powder on the heating panels, the heat transfer continuously decreases. This decrease in heat transfer needs to be compensated by increasing the vapor pressure within the heat panels, which is limited by the technical maximum vapor pressure, in this case of around 0.9 bar. Once said vapor pressure is reached, the plant needs to be shutdown, the dryer needs to be emptied, opened and the heating panels need to be cleaned or replaced.

[0083] Thus, for evaluating the long-term dryer performance, the necessary vapor pressure for the heating panels per ton of throughput (=specific vapor pressure) is considered.

[0084] In Comparative Example, the dryer is operated as described above. The lump outlet is opened every 10 to 30 minutes for around 30 seconds. In doing this, the height of the fluidized bed drops to around 95% of the setpoint height.

[0085] In Example , the dryer is operated in the same manner as in Comparative Example. However, in addition, a level decrease is performed every two hours. For this, the discharge opening is fully opened, which leads to a reduction of the bed height. After reaching 75% of the setpoint bed height, the discharge opening is closed so that the bed height increases reaching the setpoint height. During the level decrease the lump outlet remains fully closed. By fully opening the discharge opening, the shortest level decrease is chosen. In this example, the time for decreasing the bed height to 75% takes around 7 minutes, while the time until the setpoint height is reached again takes 8 minutes. Thus, the level decrease takes about 15 minutes in total.

[0086] In Figure 3 a plot of the specific vapor pressure in the heating panels of the first dryer chamber in mbar hit is shown over time in months is shown. It is a representation of the heat transfer efficiency over time, i.e. how the heat required to dry the powder, normalized to the powder flow through the powder dryer, evolves over time with and without the method of the present disclosure. The plot is divided in two sections, a first section (400) representing Comparative Example and a second section (500) representing Example. The high drops in the first section (400) are due to replacement of the heating panels.

[0087] As can be seen, the vapor pressure in Example can be kept rather constant and decrease of dryer performance of more than 15 mbar hit can be completely avoided. Consequently, shutdown of the dryer can be avoided as the dryer performance is no longer limited.

Claims

1. A continuous method for the preparation of a dried powder in a fluidized bed dryer, the fluidized bed dryer comprising:

   - at least one powder inlet for introducing a mixture of a powder to be dried and a liquid to be removed from the powder into the fluidized bed dryer;
   - a perforated bottom for introducing a drying gas into the fluidized bed dryer;
   - a powder outlet for discharging a dried powder from the fluidized bed dryer into a discharge line, the powder outlet being arranged at a predetermined height distanced from the perforated bottom, and
   - a lump outlet for removing powder agglomerates and lumps from the fluidized bed dryer,

   wherein the method comprises the following steps:

   - introducing the mixture of powder to be dried and the liquid to be removed from the powder through the at least one powder inlet into the fluidized bed dryer;
   - introducing the drying gas through the perforated bottom thereby forming a fluidized powder bed within the fluidized bed dryer having a setpoint height;
   - passing, within the fluidized bed dryer, the powder from the at least one powder inlet to the powder outlet;
   - continuously or discontinuously discharging powder from the fluidized bed dryer through the powder outlet and continuously or discontinuously discharging from the fluidized bed dryer powder agglomerates and lumps through the lump outlet, thereby maintaining the height of the fluidized bed within the fluidized bed dryer within a first predetermined range of the setpoint height, and
   - periodically carrying out a level decrease in which the height of the fluidized bed within the fluidized bed dryer is reduced to a basic height, which is lower than a lower limit of the first predetermined range.

2. The method of claim 1, wherein a closable discharge opening is provided, the closable discharge opening leading into the discharge line and wherein the discharge opening is at least partially opened during the level decrease.

3. The method of claim 1 or 2, wherein the lump outlet is closed during the level decrease.

4. The method of any one of claims 1 to 3, wherein the

powder discharged into the discharge line and the lumps discharged via the lump outlet are combined together downstream the fluidized bed dryer.

5. The method of any one of claims 1 to 4, wherein during operation within the first predetermined range of the setpoint height, the lump outlet is opened at periodic intervals.

6. The method of any one of claims 1 to 5, wherein the height of the fluidized powder bed within the fluidized bed dryer is determined by measuring the pressure drop across the fluidized powder bed.

7. The method of any one of claims 1 to 6, wherein the level decrease is carried out with a frequency of from two to 24 decreased per 24 hours.

8. The method of any one of claims 1 to 7, wherein a level decrease is carried out every two to four hours.

9. The method of any one of claims 1 to 8, wherein the first predetermined range is from 95% to 100% of the setpoint height, and the basic height is from 30% to less than 95% of the setpoint height, preferably from 50 to 75% of the setpoint height.

10. A fluidized bed dryer for carrying out the method of any one of claims 1 to 9, wherein the fluidized bed dryer is divided into at least two subsequent dryer chambers, wherein the subsequent dryer chambers are connected to one another via at least one powder passage, wherein the last dryer chamber comprises a lump outlet, a powder outlet and a discharge outlet, wherein the discharge outlet is arranged at a height between the lump outlet and the powder outlet.

11. The fluidized bed dryer of claim 10, wherein lump outlet is formed as a chute extending from the perforated bottom to the outside of the fluidized bed dryer and opening into the discharge line.

12. The fluidized bed dryer of claim 11, wherein the chute comprises a closure for closing the lump outlet, the closure being arrange outside the fluidized bed dryer.

13. The fluidized bed dryer of any one of claims 10 to 12, wherein the fluidized bed dryer comprises a closure, which is configured to gradually open and close the discharge outlet.

14. The fluidized bed dryer of any one of claims 10 to 13, wherein the fluidized bed dryer comprises a wet powder discharge in the last dryer chamber, the wet powder discharge being arranged between the powder passage of a previous dryer chamber and the lump outlet.

15. The fluidized bed dryer of any one of claims 1 to 14, wherein a time for reducing the height of the fluidized bed from the first predetermined range to the basic height a time for increasing the height of the fluidized bed from the basic height to the first predetermined range.

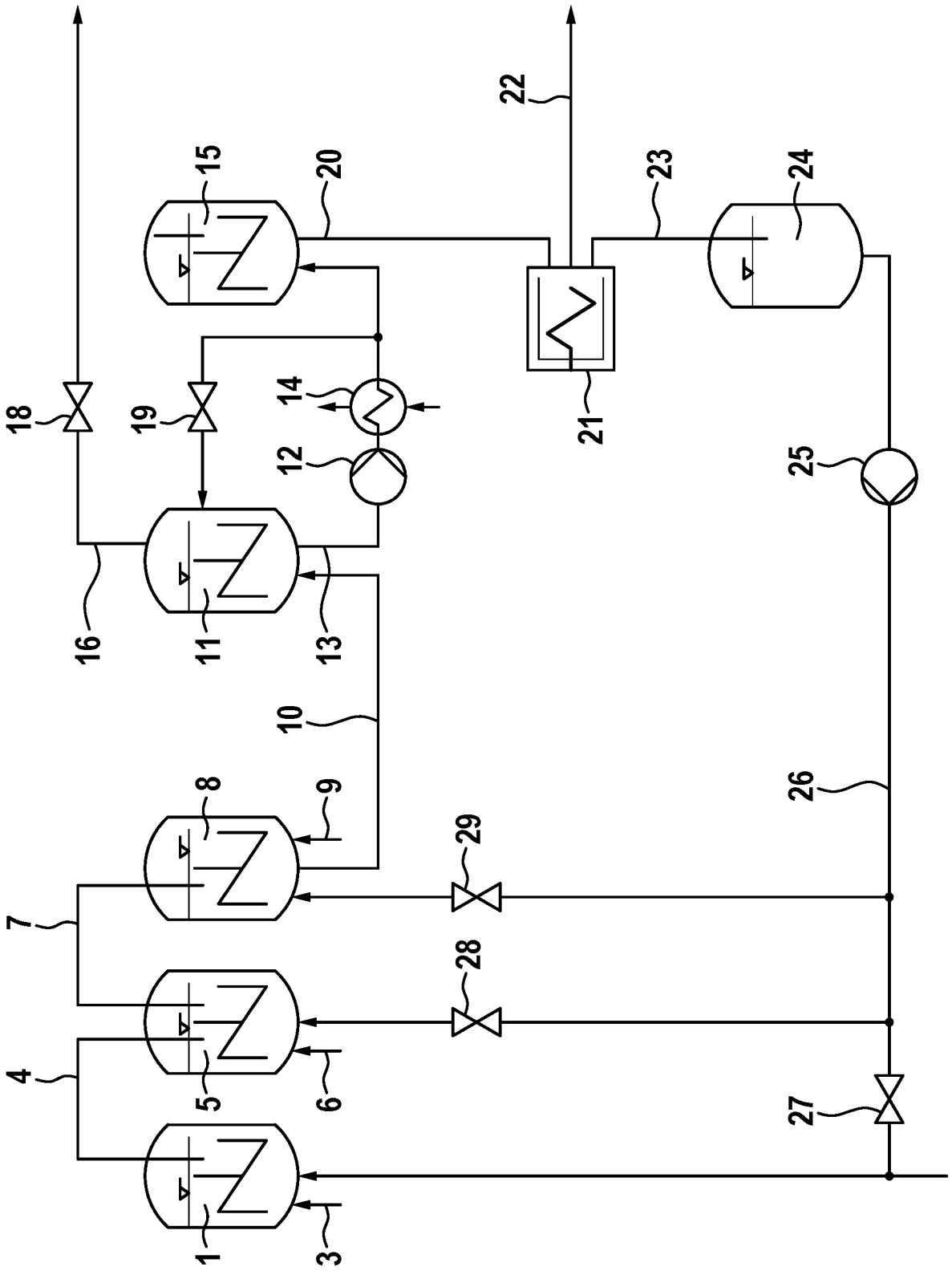

Fig. 1

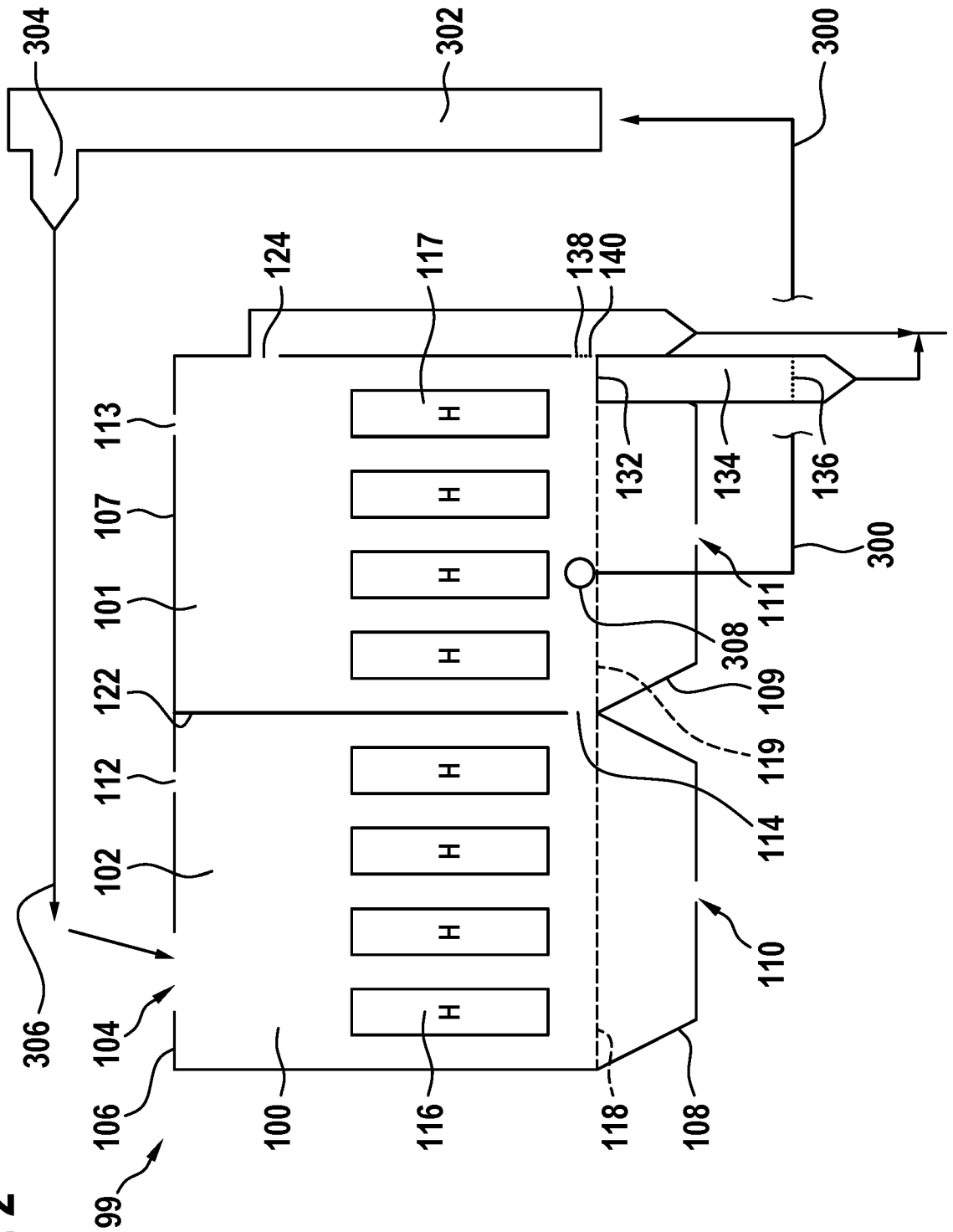
304
302
300
124
117
138
140
113
107
101
122
112
102
132
134
136
300
111
308
109
119
114
110
306
104
106
99
100
116
118
108
H

Fig. 2

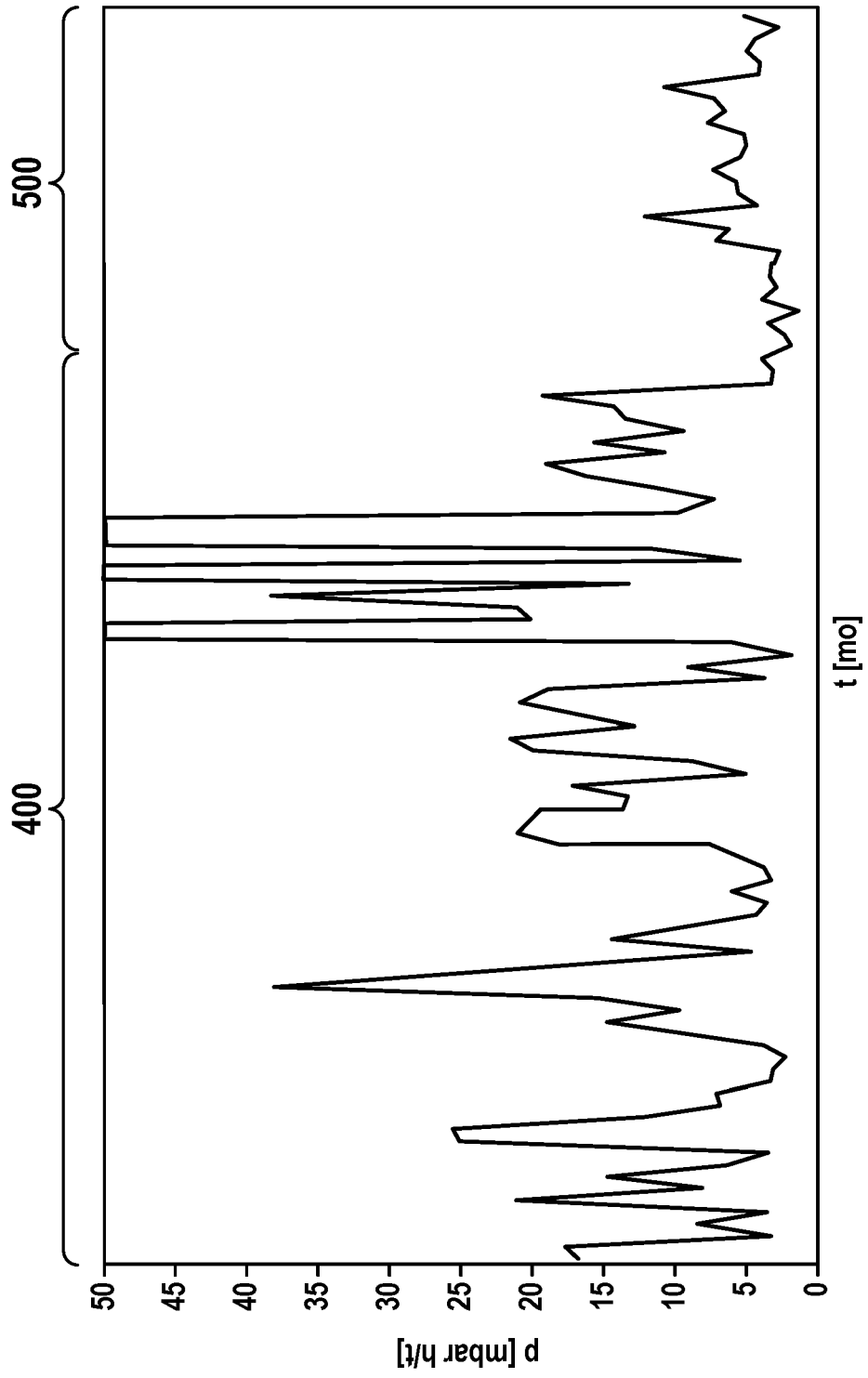

Fig. 3

Europäisches Patentamt
European Patent Office
Office européen des brevets

EUROPEAN SEARCH REPORT

Application Number
EP 24 15 0515

DOCUMENTS CONSIDERED TO BE RELEVANT

Category	Citation of document with indication, where appropriate, of relevant passages	Relevant to claim	CLASSIFICATION OF THE APPLICATION (IPC)
Y	WO 2017/140648 A1 (BASELL POLYOLEFINE GMBH [DE]) 24 August 2017 (2017-08-24) * figures 1-4 *	1-15	INV. F26B21/00 F26B21/14
Y	CN 112 856 933 A (TIANHUA INST CHEMICAL MACHINERY & AUTOMATION) 28 May 2021 (2021-05-28) * figure 1 *	1-15	
Y	JP 2014 145578 A (MITSUBISHI HEAVY IND LTD) 14 August 2014 (2014-08-14) * figure 1 *	1-15	
Y	JP 2015 064149 A (IHI CORP) 9 April 2015 (2015-04-09) * figures 1-4 *	1,10	

TECHNICAL FIELDS SEARCHED (IPC)

F26B

The present search report has been drawn up for all claims

Place of search	Date of completion of the search	Examiner
The Hague	12 June 2024	Makúch, Milan

CATEGORY OF CITED DOCUMENTS

X : particularly relevant if taken alone
Y : particularly relevant if combined with another document of the same category
A : technological background
O : non-written disclosure
P : intermediate document

T : theory or principle underlying the invention
E : earlier patent document, but published on, or after the filing date
D : document cited in the application
L : document cited for other reasons

& : member of the same patent family, corresponding document

EPO FORM 1503 03.82 (P04C01)

ANNEX TO THE EUROPEAN SEARCH REPORT ON EUROPEAN PATENT APPLICATION NO. EP 24 15 0515

This annex lists the patent family members relating to the patent documents cited in the above-mentioned European search report. The members are as contained in the European Patent Office EDP file on
The European Patent Office is in no way liable for these particulars which are merely given for the purpose of information.

12-06-2024

Patent document cited in search report	Publication date	Patent family member(s)	Publication date
WO 2017140648 A1	24-08-2017	BR 112018015614 A2	26-12-2018
		CN 108699177 A	23-10-2018
		EP 3416989 A1	26-12-2018
		KR 20180102680 A	17-09-2018
		RU 2673556 C1	28-11-2018
		US 2019339007 A1	07-11-2019
		WO 2017140648 A1	24-08-2017
CN 112856933 A	28-05-2021	NONE	
JP 2014145578 A	14-08-2014	JP 5881628 B2	09-03-2016
		JP 2014145578 A	14-08-2014
		WO 2014119489 A1	07-08-2014
JP 2015064149 A	09-04-2015	JP 6197530 B2	20-09-2017
		JP 2015064149 A	09-04-2015

EPO FORM P0459

For more details about this annex : see Official Journal of the European Patent Office, No. 12/82

REFERENCES CITED IN THE DESCRIPTION

This list of references cited by the applicant is for the reader's convenience only. It does not form part of the European patent document. Even though great care has been taken in compiling the references, errors or omissions cannot be excluded and the EPO disclaims all liability in this regard.

Patent documents cited in the description

- WO 2017140648 A1 **[0027]**