United States Patent [19]

MacDonald et al.

[11] **Des. 255,116**

[45] ** **May 27, 1980**

[54] **PORTABLE PROGRAMMER FOR PROGRAMMABLE CONTROLLER**

[75] Inventors: **John B. MacDonald**, Boston; **Michael J. Mercadante**, North Quincy, both of Mass.

[73] Assignee: **Gould Inc., Modicon Division**, Andover, Mass.

[**] Term: **14 Years**

[21] Appl. No.: **883,340**

[22] Filed: **Mar. 3, 1978**

[51] **Int. Cl.** ..... **D14—02**

[52] **U.S. Cl.** **D14/43**

[58] **Field of Search** ..... D13/11, 12, 32, 35, D13/40, 41; D14/40–51; 361/331, 332, 334, 344, 346, 350, 356, 358, 364, 365, 366, 369, 380, 390, 391, 392, 394; 364/706, 707, 708; 340/365 R

[56] **References Cited**

U.S. PATENT DOCUMENTS

3,942,077 3/1976 Powers 361/331

OTHER PUBLICATIONS

Datamation, 3-1975, p. 39, Portable CRT Terminal.

Primary Examiner—Susan J. Lucas
Attorney, Agent, or Firm—Mattern, Ware, Davis & Stoltz

[57] **CLAIM**

The ornamental design for a portable programmer for programmable controller, substantially as shown and described.

DESCRIPTION

FIG. **1** is a top, front perspective view of the portable programmer for programmable controller showing our new design, the front cover being removed to disclose the keyboard and CRT display;

FIG. **2** is a front elevational view thereof on an enlarged scale;

FIG. **3** is a front elevational view thereof on an enlarged scale with the front cover in place;

FIG. **4** is a right side elevational view thereof on an enlarged scale with the front cover in place;

FIG. **5** is a rear elevational view thereof on an enlarged scale; and

FIG. **6** is a bottom plan view thereof on a reduced scale with the front cover in place.

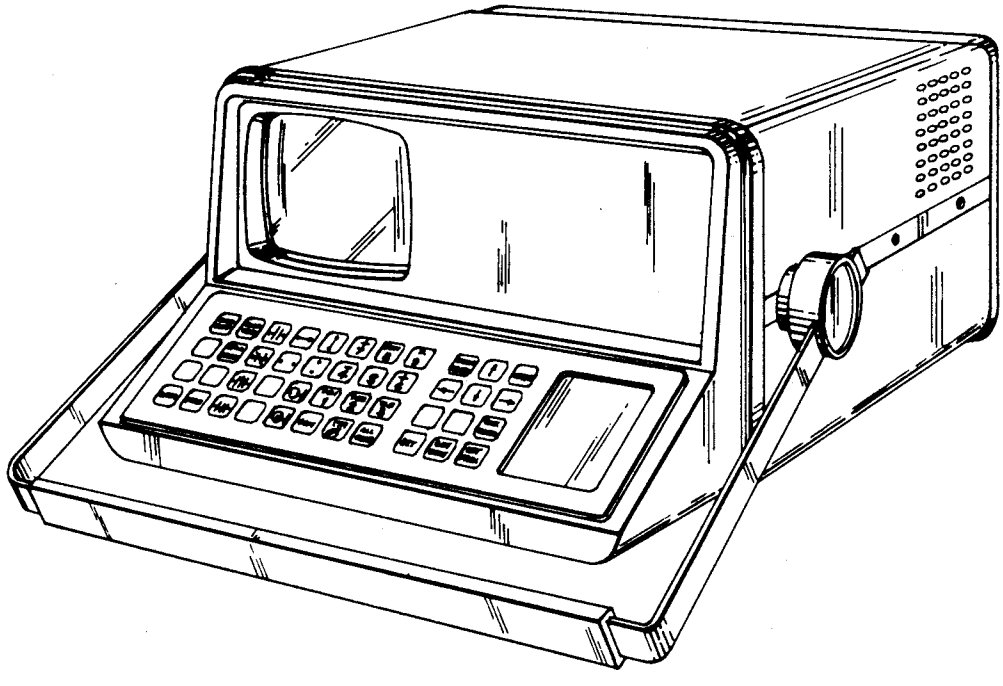

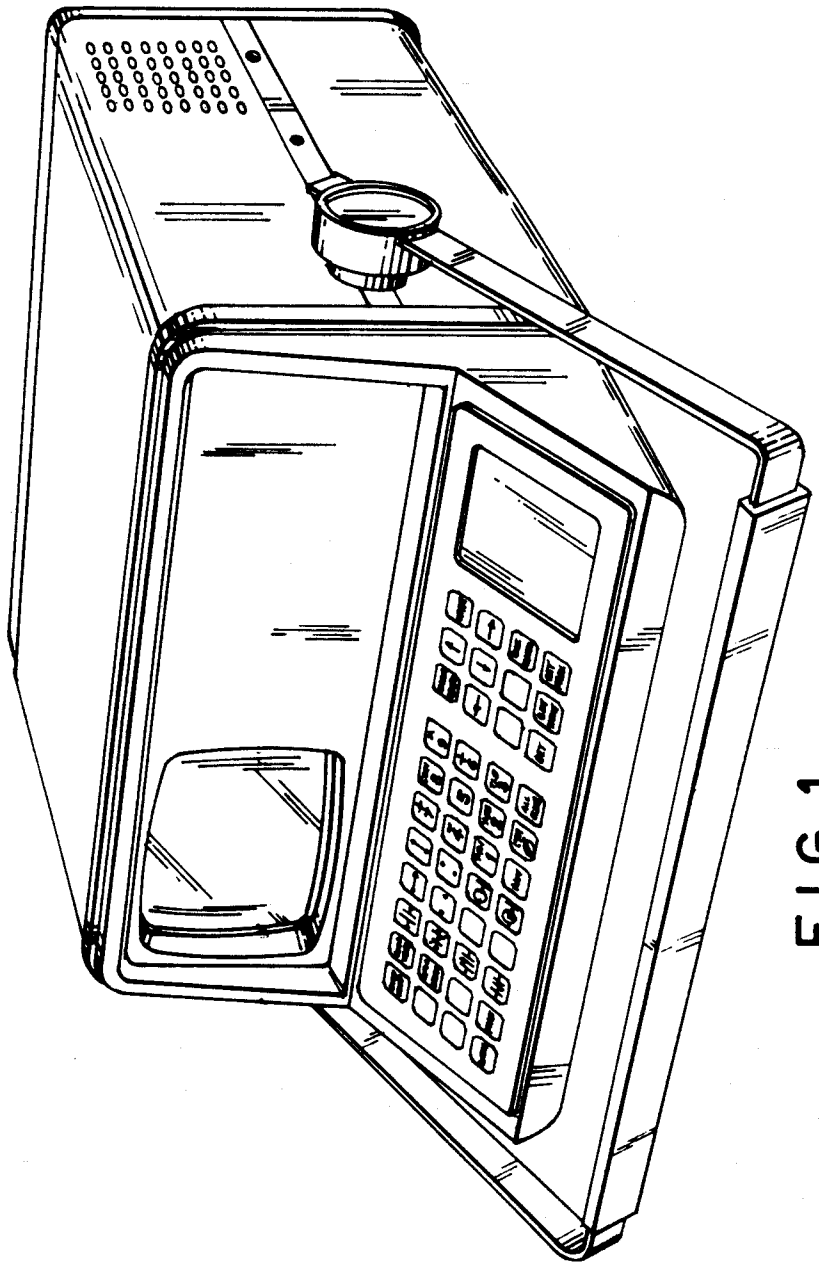

FIG. 1

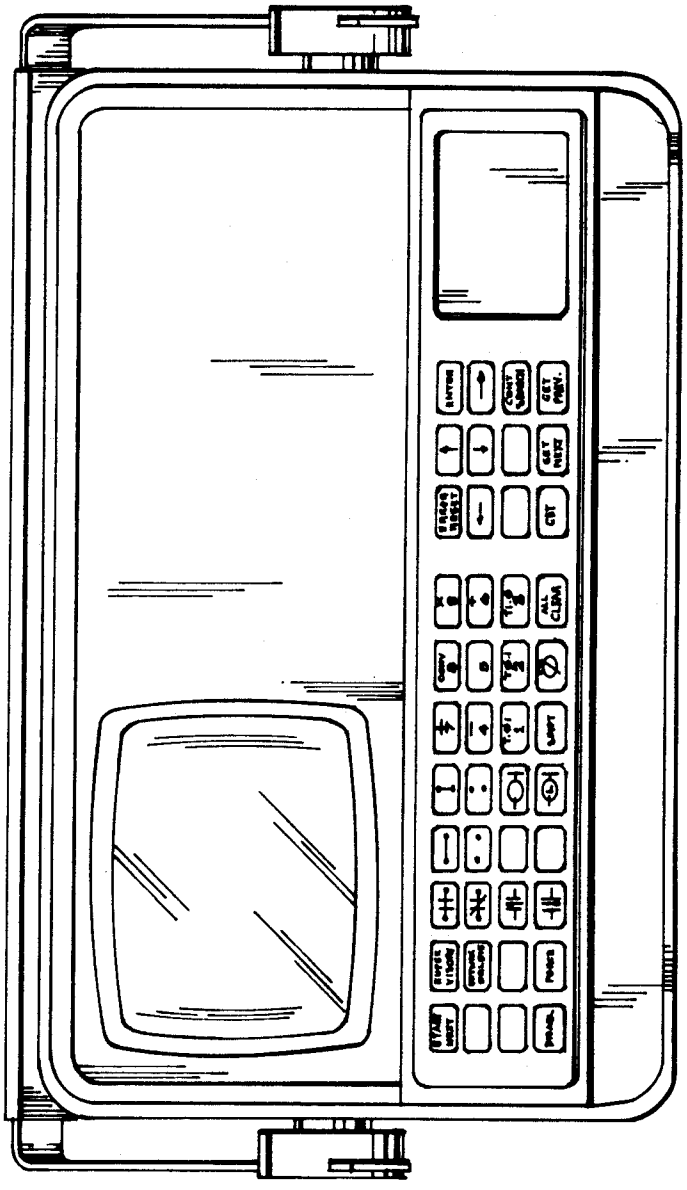

FIG. 2

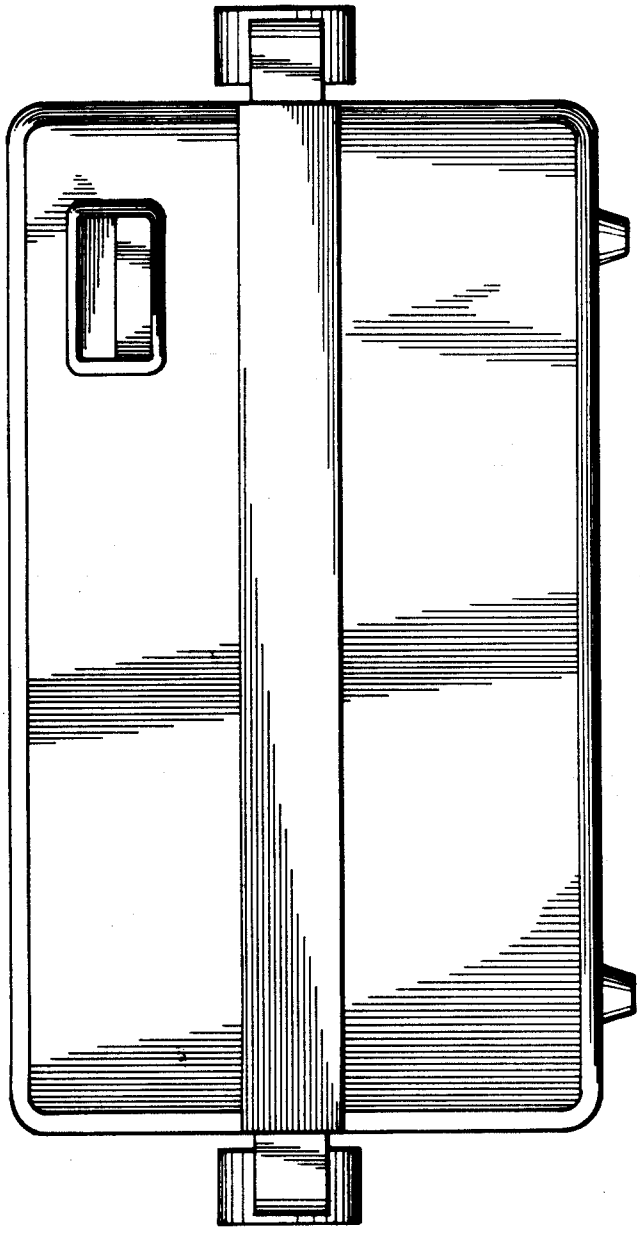

FIG. 3

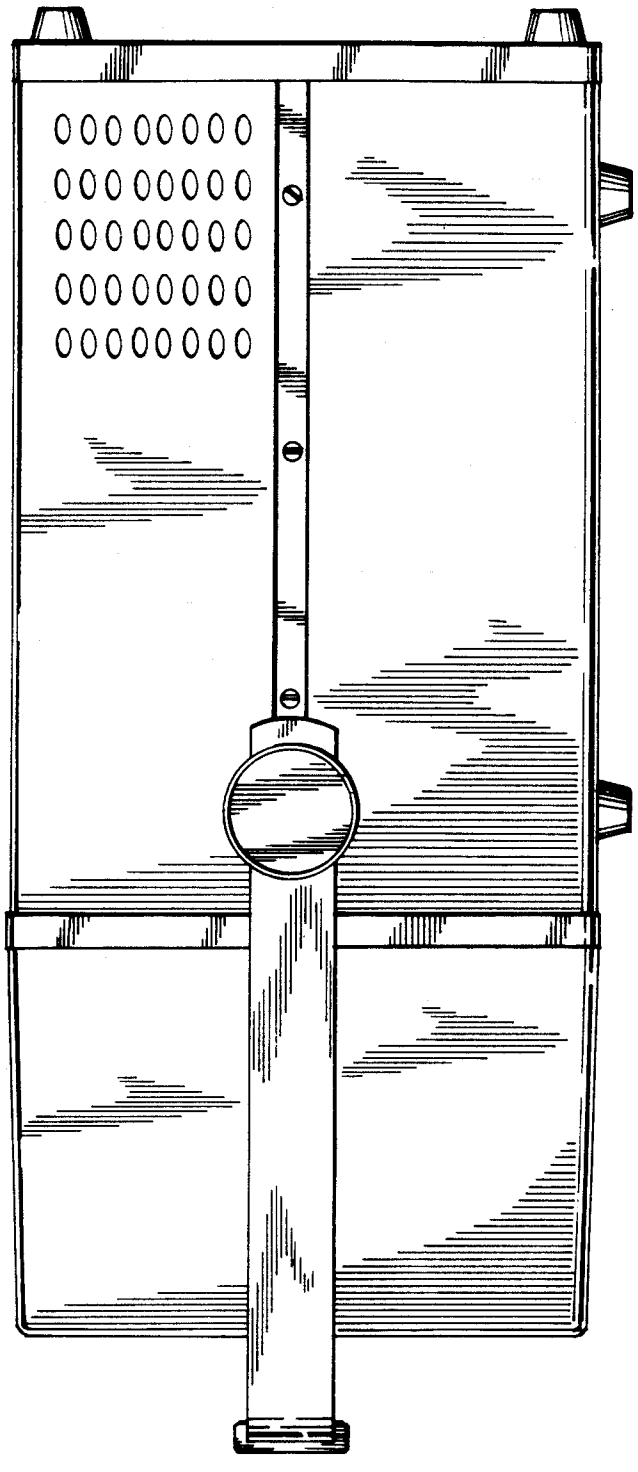

FIG. 4

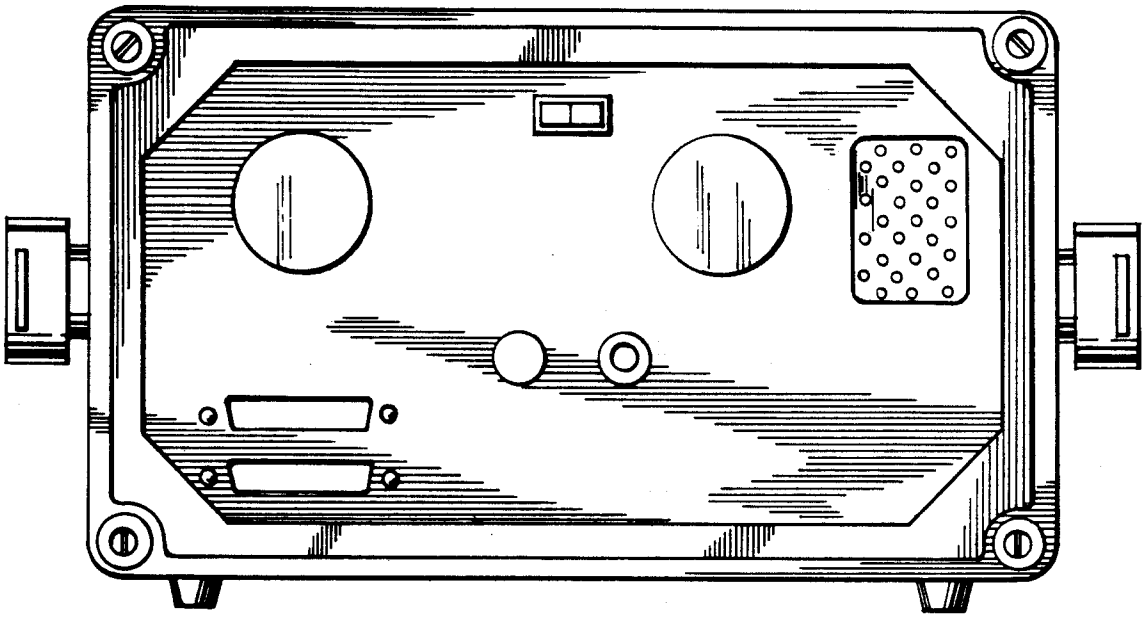

FIG. 5

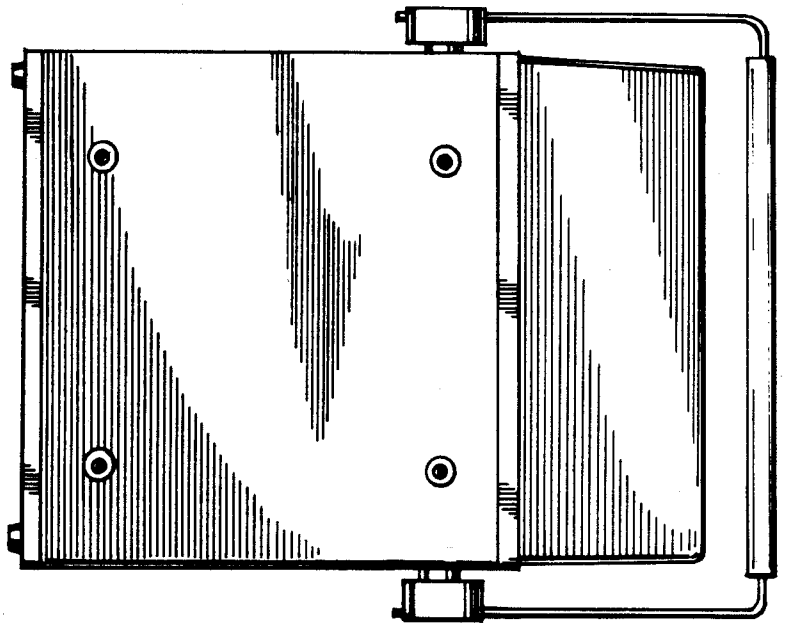

FIG. 6