Oct. 10, 1950 H. B. FLETCHER 2,525,537

FLUORESCENT LIGHTING FIXTURE

Filed Feb. 28, 1950

Fig. 1

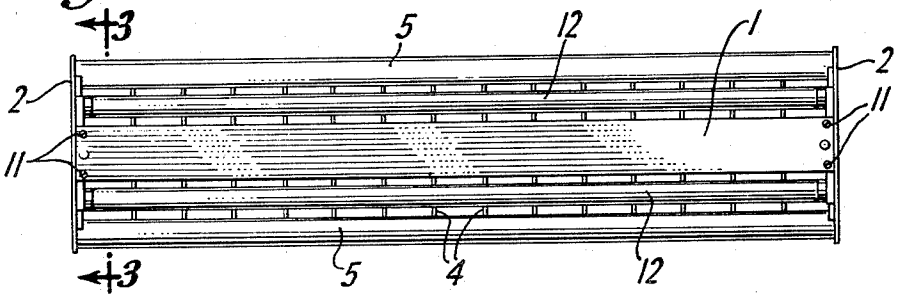

Fig. 2

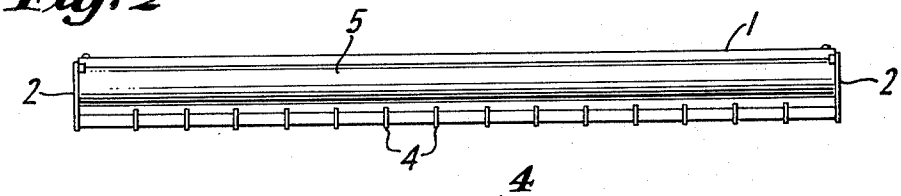

Fig. 3

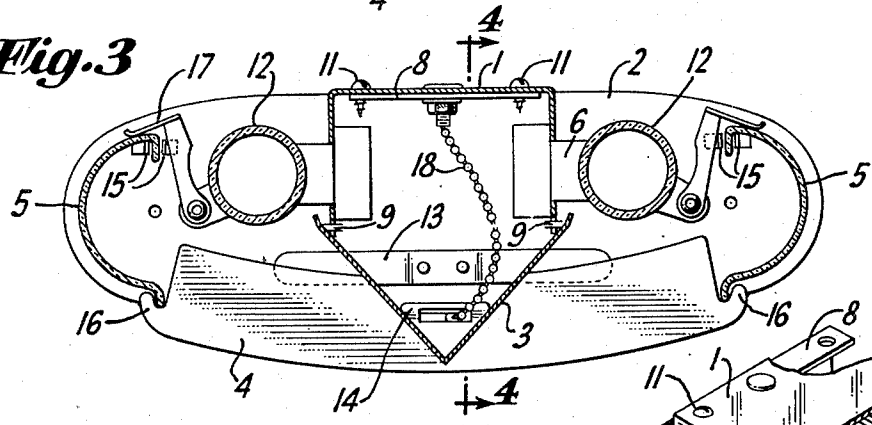

Fig. 4

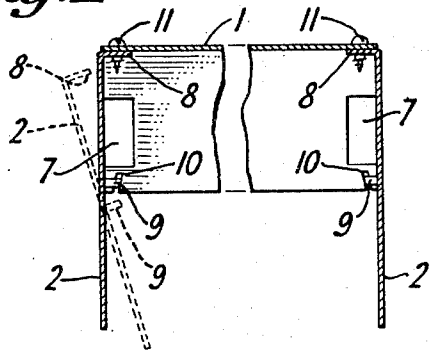

Fig. 5

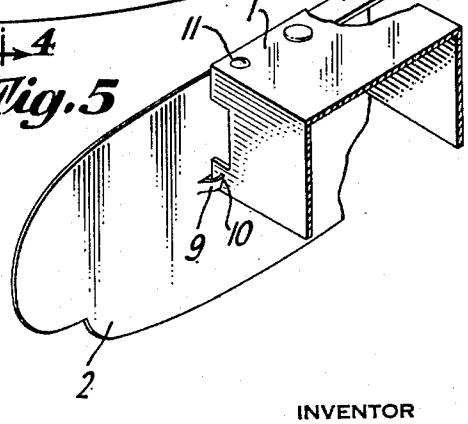

INVENTOR
HARLAN B. FLETCHER
BY Joseph C. Ryan
ATTORNEY

Patented Oct. 10, 1950

2,525,537

UNITED STATES PATENT OFFICE

2,525,537

FLUORESCENT LIGHTING FIXTURE

Harlan B. Fletcher, Beverly, Mass., assignor to Sylvania Electric Products Inc., Salem, Mass., a corporation of Massachusetts

Application February 28, 1950, Serial No. 146,747

1 Claim. (Cl. 240—51.11)

1

This invention relates to electric lighting fixtures and more particularly to those in which elongated linear light sources, such as fluorescent lamps are employed.

An object of this invention is to provide an improved chassis construction for fluorescent lamp fixtures.

Another object is to provide an improved end plate construction for fluorescent lamp fixtures.

A further object is to provide an improved mechanism for attaching the end plates of fluorescent lamp fixtures to the chassis thereof.

Further objects, advantages and features will be apparent from the following description when read in conjunction with the accompanying drawing in which:

Figure 1 is a plan view of a fluorescent lamp fixture with which the chassis-end plate combination of my invention may be employed.

Figure 2 is a side elevational view of the fixture of Figure 1.

Figure 3 is an enlarged transverse sectional view taken along the line 3—3 of Figure 1.

Figure 4 is an enlarged, fragmentary, longitudinal, sectional view of the chassis-end plates assembly taken along line 4—4 of Figure 3 with one of the end plates shown in phantom, in position preliminary to attachment to the chassis.

Figure 5 is an enlarged, fragmentary detail in perspective of the chassis-end plate assembly.

This invention embodies the idea of providing a novel means for attaching the end plates to the chassis of a fluorescent lamp fixture. It is characterized by the ease and speed with which the operation may be performed and the rigidity of the resulting assembly. Figures 1, 2 and 3 of the drawing show one type of fluorescent lamp fixture with which the chassis-end plate assembly of this invention may be employed. Its ready adaptability to fixtures other than the one illustrated will be apparent to those skilled in the art.

The fixture as illustrated in Figures 1, 2 and 3 comprises an elongated channel-like chassis 1, a pair of end plates 2 attached to the ends thereof, a V-shaped reflector 3 supported by the end plates 2 and disposed beneath the chassis 1, a plurality of louver fins 4 connected to and extending transversely of the reflector 3, and a pair of light-controlling panels 5 supported by and extending between the end plates 2.

The elongated channel-like chassis 1 serves as a mounting member to which a ballast and conventional wiring equipment (not shown) may be attached. The top of the chassis 1 is provided with a plurality of knock-outs (not shown)

2

through which suitable mechanical connections may be made to hang or mount the fixture and through which the wiring equipment may be connected to a source of electric power. A pair of lamp holders 6 are mounted on the inside face of the chassis 1 at each end thereof and project outwardly therefrom through suitable cut-outs 7. Fluorescent lamps 12 are supported by these lampholders 6.

The manner in which the end plates 2 are attached to the chassis 1 is shown more particularly in Figures 4 and 5. The upper peripheral edge of each end plate is provided with an inwardly turned flange 8. The inside face of each end plate is provided with a pair of lances 9 and the sides of chassis 1 have a pair of angular notches 10 cut therein adjacent each end thereof. Each end plate 2 is attached to the chassis 1 by inserting the lances 9 in the angular notches 10 and then rotating the end plate clockwise until the flange 8 slides beneath the end of the chassis 1. The flange 8 and the chassis 1 are then fastened to one another by some suitable means, such as by screws 11, for example. This method of mounting the end plates on the chassis provides an exceptionally rigid assembly capable of withstanding considerable rough handling and usage and still maintain its original alignment. The interlocking of the lances 9 in the angular notches 10 with its resulting wedge action, and the fastening of the flanges 8 of the end plates to the chassis prevent both longitudinal and lateral displacement of the end plates with reference to the chassis. In fixtures where lampholders of the "butt-on" type are employed, they may be mounted on the end-plates 2.

The reflector 3, which is disposed beneath the chassis 1 and which extends from one end plate to another, is supported by spring latches 13, mounted on the inside faces of the end plates and engageable with cooperating slots cut in the ends of the reflector.

The reflector 3 has a plurality of slots cut transversely therein into which the louver fins 4 are inserted. Each fin 4 has a tab 14 formed integral therewith which is deformed after the fin has been positioned in the reflector slot, thereby providing a mechanical locking of the fin to the reflector (Figure 3).

The inside face of each end plate is provided with two pairs of retaining tabs 15 which support the light-controlling panels 5. The lower edge of the panels 5 seat in the hook portion 16 of the louver fins 4. The panels 5 are retained

securely in position by latches 17 which are pivotally mounted on the end plates 2.

A pair of reflector chain retainers 18, one end of each of which is attached to the chassis 1 and the other end of each to the tab 14 of a louver fin 4, are provided intermediate the ends of the chassis 1. These retainers 18 permit the reflector-louver assembly to be disengaged from the end plates and suspended a few inches below the chassis, thereby permitting access for maintenance purposes to the electrical equipment within the chassis without requiring complete detachment therefrom. These chain retainers 18 also serve as safety hanging devices in case of malfunction of the spring latches 13.

What I claim is:

In a lighting fixture, the combination of an elongated channel chassis having downwardly projecting flanges, a notch cut in each of said flanges in the lower longitudinal edge thereof near the end and inclined upwardly and inwardly so as to upwardly diverge from the end edge of said flange; an end plate abutting said channel chassis at the end of said chassis; each end plate having a pair of lances struck inwardly on the inside face thereof and spaced to occur adjacent the ends of the respective flanges of the chassis, said lances interlocking with the respective notches in said chassis flanges; and means drawing said end plates upwardly so as to wedgingly engage said lances within said inclined and diverging notches, and for securing the upper peripheral edge of each end plate to said chassis.

HARLAN B. FLETCHER.

REFERENCES CITED

The following references are of record in the file of this patent:

UNITED STATES PATENTS

Number	Name	Date
1,096,548	Maison	May 12, 1914
1,154,576	Maison et al.	Sept. 15, 1915
1,221,944	Wurdack	Apr. 10, 1917
1,557,066	Krantz	Oct. 13, 1925
1,604,516	Jacobsen	Oct. 26, 1926
1,628,406	Horton	May 10, 1927
2,316,404	Carter	Apr. 13, 1943
2,321,099	Naysmith	June 8, 1943
2,411,952	Biller	Dec. 3, 1946
2,457,023	Zelt	Dec. 21, 1948

FOREIGN PATENTS

Number	Country	Date
587,744	Great Britain	May 5, 1947