(No Model.)

P. FLUCKS & G. P. McDONNELL.

BICYCLE BELL.

No. 590,659. Patented Sept. 28, 1897.

Fig. 1.

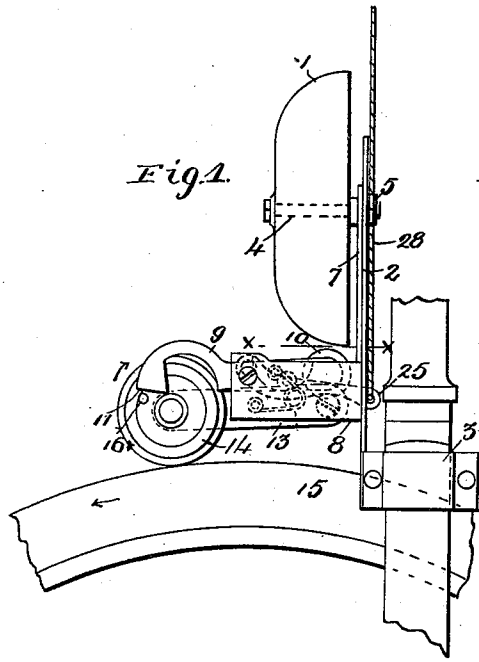

Fig. 2.

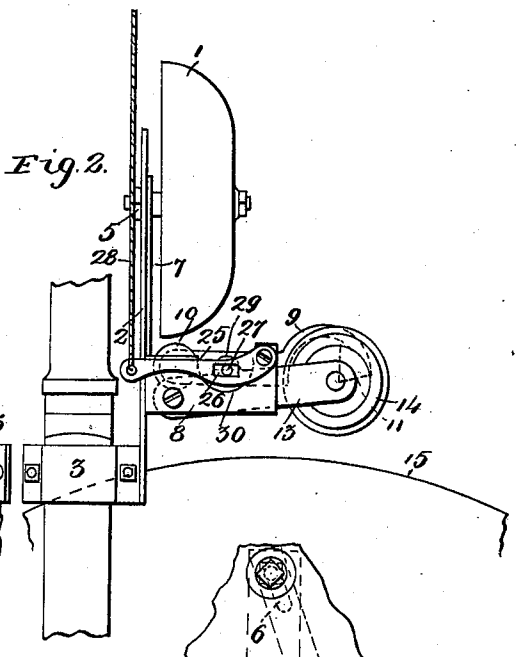

Fig. 3.

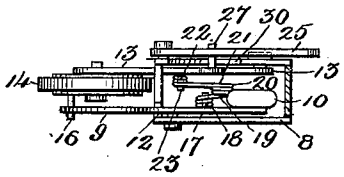

Fig. 4.

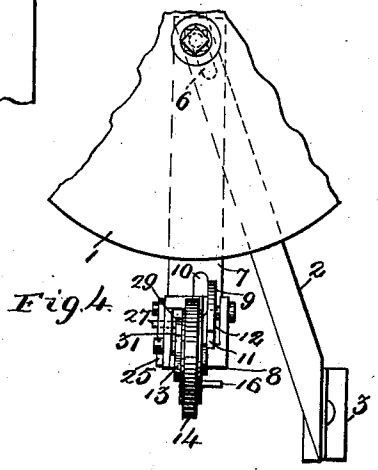

Fig. 5.

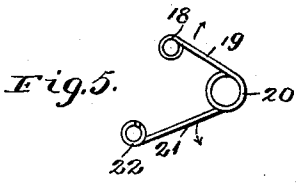

Fig. 6.

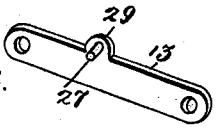

Witnesses
Alfred A. Mathey
Lee Sale

Inventors
Paul Flucks and
George P. McDonnell
By their Attorneys
Keller & Starck

THE NORRIS PETERS CO., PHOTO-LITHO., WASHINGTON, D. C.

UNITED STATES PATENT OFFICE.

PAUL FLUCKS AND GEORGE P. McDONNELL, OF ST. LOUIS, MISSOURI.

BICYCLE-BELL.

SPECIFICATION forming part of Letters Patent No. 590,659, dated September 28, 1897.

Application filed January 15, 1897. Serial No. 619,365. (No model.)

To all whom it may concern.

Be it known that we, PAUL FLUCKS, a subject of the Emperor of Germany, and GEORGE P. McDONNELL, a citizen of the United States, residing at St. Louis, State of Missouri, have invented certain new and useful Improvements in Bicycle Alarm-Bells, of which the following is a full, clear, and exact description, reference being had to the accompanying drawings, forming a part hereof.

Our invention has relation to improvements in bicycle alarm-bells; and it consists in the novel arrangement and combination of parts more fully set forth in the specification and pointed out in the claims.

In the drawings, Figure 1 is an elevation of one side of the device as applied to the wheel. Fig. 2 is an elevation of the opposite side, with the roller, however, disengaged from the tire of the wheel. Fig. 3 is a section on line *x x* of Fig. 1. Fig. 4 is a front elevation of the device, the bell being partly broken away. Fig. 5 is a detail view of the controlling-spring for the hammer-lever and the roller-carrying arm, and Fig. 6 is a detail of the roller-carrying arm.

The present invention is an improvement on the construction of alarm-bell described in United States Letters Patent granted us under date of December 8, 1896, and numbered 572,881, the object being to materially simplify the same in several particulars apparent from a detailed description of the invention, which is as follows:

Referring to the drawings, 1 represents the bell, which, like in the patented construction above referred to, is secured to the lower fork of the steering-rod by means of an arm 2, the lower end of which terminates in a clamp 3, adapted to be carried by one of the members of the fork. The upper end of the arm is passed over the terminal screw-threaded end of the stem 4, by which the bell is directly carried, a nut 5 serving to secure the parts, and a slot 6 being formed at the upper end of the arm 2, whereby any desirable adjustment in the securing of the parts is possible. Also secured to the screw-threaded end of the stem 4 is a bar 7, projecting a suitable distance beyond the peripheral edge of the bell, the said projecting end of the bar having secured thereto or formed therewith a (preferably) rectangular or oblong frame 8, projecting forwardly of the bell and substantially at right angles to the plane of the free peripheral edge of the bell. Along the inner surface of one of the lateral walls of the frame and at a point adjacent to the upper edge of said wall and in proximity to the outer terminal wall of the frame is pivoted a lever 9, whose inner arm is confined within the limits of the frame and which carries a hammer 10, adapted to operate upon the bell, and whose outer upwardly-curved arm is provided with an expanded terminal portion having a basal outwardly-inclined straight edge 11, for a purpose to be presently described. The lever 9 operates upon the bell by being caused to oscillate in a vertical plane about its pivotal point or fulcrum, being guided in its oscillations by the walls of a slit 12, formed in the outer terminal wall of the frame 8. Pivoted along the inner surface of the opposite lateral wall of the frame, near the lower edge thereof and adjacent to the inner terminal wall of the frame, is a roller-carrying arm 13, the free outer projecting end of which carries a contact-roller 14, normally bearing against the tire 15 of the front wheel of the bicycle. The side of the roller adjacent to the hammer-lever 9 is provided with a pin 16, which, as the roller revolves in the direction indicated by the arrows in Fig. 1, intermittently rides over the straight edge 11 of the enlarged end of the curved arm of the lever 9, raising said end and depressing the inner end carrying the hammer, thus tilting the hammer out of contact with the bell. After the pin 16 has passed off the edge 11 the hammer is again returned suddenly against the bell by a spring, the construction of which we shall now proceed to describe.

Projecting from the inner surface of the hammer-lever 9 at a point adjacent to the pivotal point of said lever and between said pivotal point and the hammer 10 is a pin 17, over which is coiled the terminal loop 18 of a spring-arm 19, forming the continuation of a medial resilient spring-coil 20, formed at the juncture of said arm 19 and a second arm 21, terminating in a loop 22. The latter is coiled about a pin 23, projecting from the inner surface of the roller-carrying arm 13 at a point

adjacent the outer terminal wall of the frame 8. The resiliency or tension of the middle coil 20 tends to keep the arms 19 and 21 separated, as best seen in Fig. 5, by which tendency the arm 19 keeps the hammer 10 against the bell, and the edge 11 of the hammer-lever is kept in the path of the pin 16, carried by the side of the roller 14, and the arm 21 tends to keep the roller 14 normally in contact with the tire of the wheel. The arms 19 and 21 and the basal coil 20 thus form a single spring whose arms simultaneously control the roller-carrying arm and the hammer-lever.

The operation now becomes apparent. As the tire 15 revolves, as indicated by the arrow, the roller 14 will revolve, as indicated, the pin 16 thereof with each revolution riding over the inclined edge 11, tripping the hammer-lever against the resiliency of the spring-arm 19 and coil 20, the latter in turn bringing the hammer forcibly against the bell the moment the pin 16 has passed off the edge 11, and so on indefinitely, the bell ringing all the time that the machine is in motion. On the other hand, the roller 14 is kept normally in engagement with the tire by the resiliency of the coil 20 and arm 21, the direction of action of the said arms being indicated by the arrows in Fig. 5. To disengage the roller from the tire, we provide a disengaging-lever 25, the same being pivoted along the outside of the lateral wall of the frame carrying the roller-carrying arm and at a point near the outer terminal wall of the frame 8, the said lever being provided with an elongated slot 26, through which passes the lateral outwardly-projecting pin 27, carried by the arm 13, the free end of the disengaging-lever being connected to the lower end of a cord 28, whose opposite end can be controlled or pulled by the rider in any mechanical manner—such, for example, as the arrangement shown by the construction described in the Letters Patent above referred to. The pin 27 projects from a lug 29, forming part of the arm 13, this arrangement being resorted to to enable the pin 27 to rest at the base of a concave depression 30, formed in the adjacent side wall of the frame, when the free end of the arm 13 is in its lowest position—that is, when the roller 14 is in engagement with the tire of the wheel. As the free end of the disengaging-lever is raised (see Fig. 2) by the cord 28 to release the roller the connecting-pin 27 is free to slide within the limits of the slot 26 of said lever. In its movements the forward end of the arm 13 is guided by the walls of the slit 31 cut for its reception in the outer terminal wall of the frame 8.

It is apparent that the construction might be varied in a few details without departing from the spirit of our invention.

Having described our invention, what we claim is—

1. In a bicycle alarm-bell, a suitable bell, means for securing the same to the frame of the machine, a roller-carrying arm, a frame to which said arm is pivoted, a hammer-lever carried by the frame, a spring for simultaneously keeping the roller normally in engagement with the tire of the wheel, and the hammer normally in contact with the bell, a pin projecting from the side of the roller and adapted during the travel of the machine to intermittently trip the hammer-lever, whereby the spring controlling the same successively brings the hammer forcibly against the bell, thus sounding an alarm, substantially as set forth.

2. In a bicycle alarm-bell, a suitable bell, means for securing the same to the frame of the machine, a roller-carrying arm, a frame to which said arm is pivoted, a hammer-lever carried by the frame, a spring for simultaneously keeping the contact-roller normally in engagement with the tire of the wheel, and the hammer normally in engagement or contact with the bell, means carried by the roller for intermittently tripping the hammer-lever during the travel of the machine, whereby the spring controlling the same successively brings the hammer forcibly against the bell, and means for disengaging the roller from the tire, substantially as set forth.

3. In a bicycle alarm-bell, a suitable bell, means for securing the same to the frame of the machine, a roller-carrying arm, a frame to which said arm is pivoted, a hammer-lever carried by the frame, a spring for simultaneously keeping the contact-roller normally in engagement with the tire of the wheel, and the hammer in contact with the bell, means carried by the roller for intermittently tripping the hammer-lever during the travel of the machine, means for disengaging the roller from the tire, and suitable guideways or slits formed in the frame for the guiding of the hammer-lever and roller-carrying arm in their movements, substantially as set forth.

4. In a bicycle alarm-bell, a suitable bell, means for securing the same to the machine-frame, a frame located in proximity to the bell, a hammer-lever pivoted to one of the lateral walls of the frame along the inner surface of said wall and adjacent to the outer terminal wall of said frame, a hammer carried by the inner arm of the lever, a roller-carrying arm pivoted along the inner surface of the opposite lateral wall of the frame and adjacent to the inner terminal wall of said frame, a pin carried by the hammer-lever and located at a point between the pivotal point of the lever and the hammer, a pin located on the roller-carrying arm at a point removed from the pivotal point of said roller-carrying arm, a spring having a medial coil and oppositely-extending arms, the free ends of the arms being respectively secured to the pin carried by the roller-carrying arm and the pin carried by the hammer-lever whereby the hammer is normally kept in engagement with the bell, and the roller carried by the roller-carrying arm in engagement with the tire of the wheel, and means carried by the roller

for intermittently tripping or oscillating the hammer-lever, the parts operating substantially as and for the purpose set forth.

5. In a bicycle alarm-bell, a suitable bell, means for securing the same to the frame of the machine, a roller-carrying arm, a frame to which said arm is pivoted, a hammer-lever carried by the frame, a spring for simultaneously keeping the contact-roller normally in engagement with the tire of the wheel, and the hammer in contact with the bell, a pin carried by the roller along the side thereof, a straight edge forming one end of the hammer-lever along which the pin intermittently rides during the travel of the machine, a disengaging-lever pivoted to the frame, means for controlling the end of the lever, a slot formed in the disengaging-lever, and a pin carried by the roller-carrying arm and operating within the slot whereby upon movement of the free end of the disengaging-lever the roller is disengaged from the tire, substantially as set forth.

In testimony whereof we affix our signatures in presence of two witnesses.

PAUL FLUCKS.
GEORGE P. McDONNELL.

Witnesses:
EMIL STAREK,
ALFRED A. MATHEY.