E. T. BURROWES.

COLLAPSIBLE WINDOW SCREEN.

APPLICATION FILED MAY 25, 1915.

1,188,411.

Patented June 27, 1916.

2 SHEETS—SHEET 1.

Fig. 1.

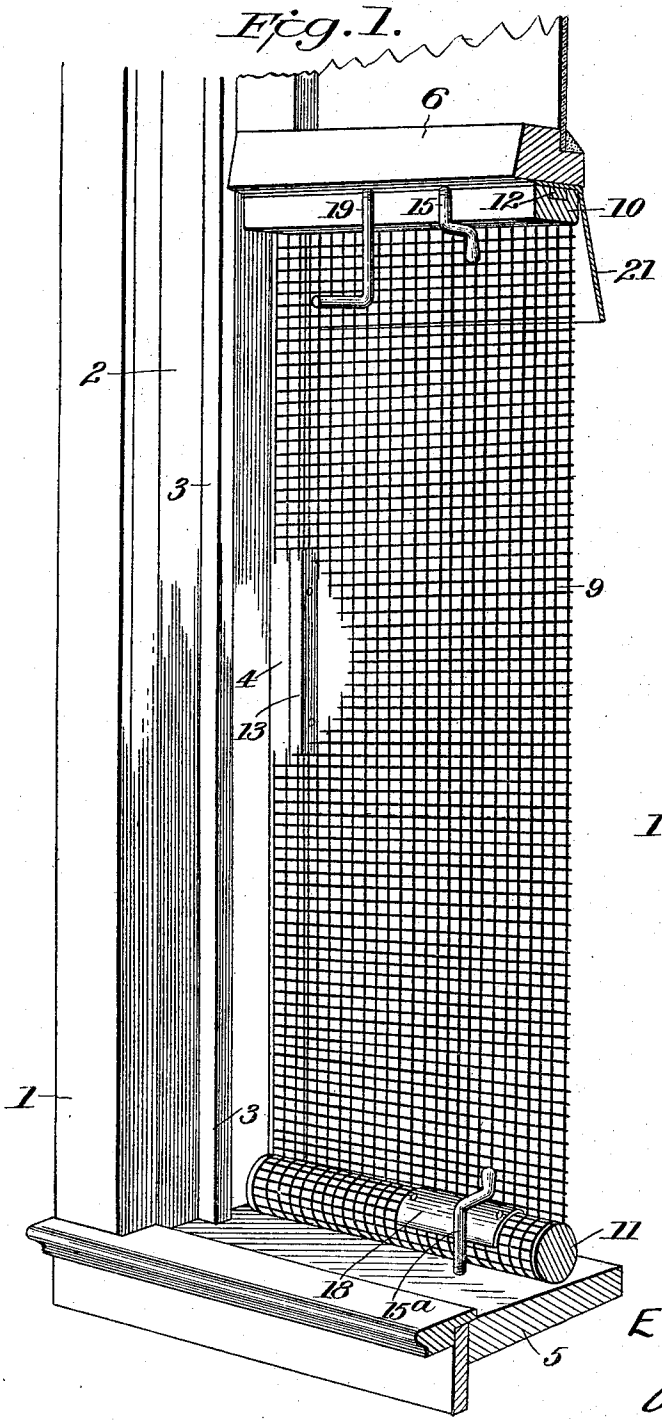

Fig. 2.

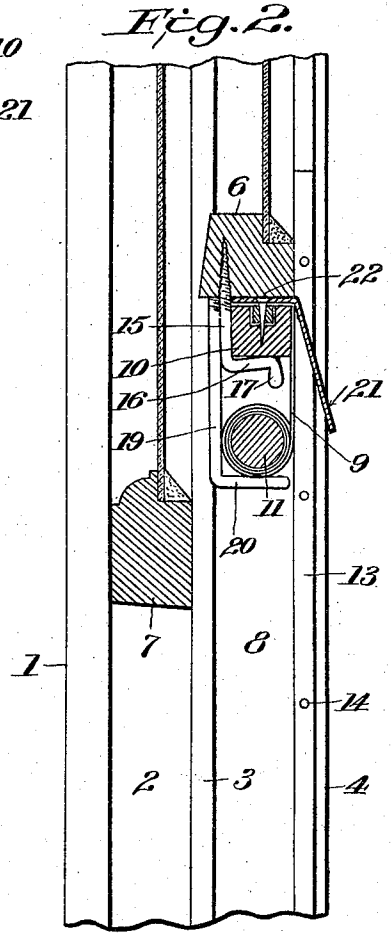

Inventor

E. T. Burrowes,

by

Watson & Boyden,

Attorneys

E. T. BURROWES.

COLLAPSIBLE WINDOW SCREEN.

APPLICATION FILED MAY 25, 1915.

1,188,411.

Patented June 27, 1916.

2 SHEETS—SHEET 2.

Fig. 3.

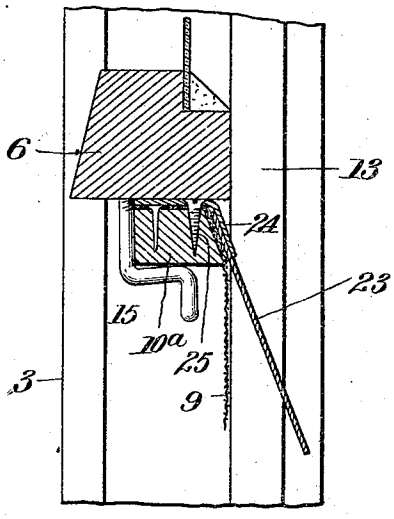

Fig. 4.

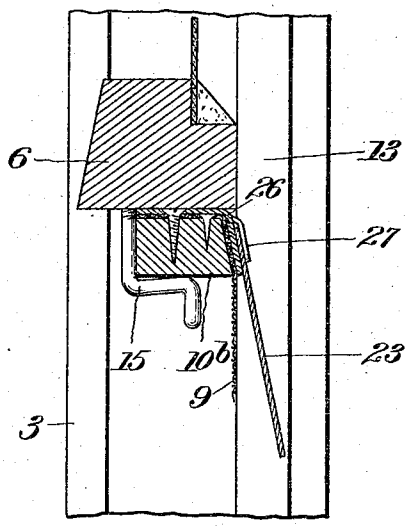

Fig. 5.

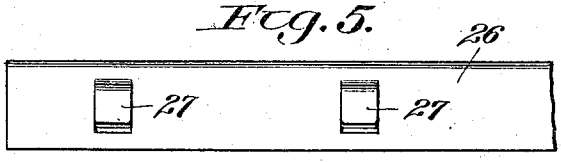

Fig. 6.

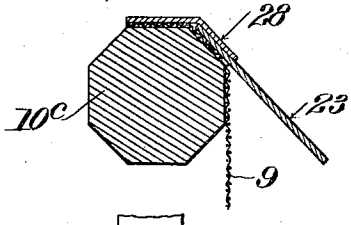

Fig. 7.

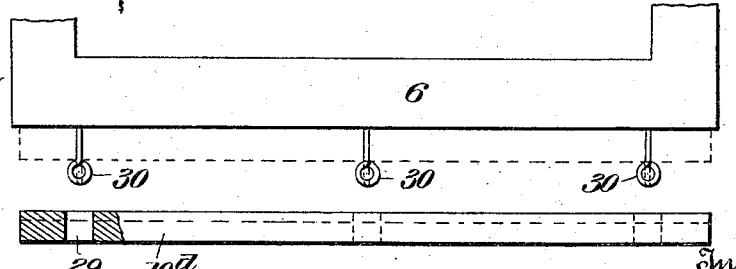

Fig. 8.

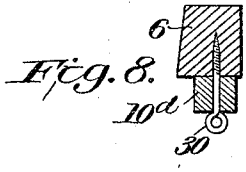

Inventor

E. T. Burrowes,

by

Watson & Boyden,

Attorneys.

THE COLUMBIA PLANOGRAPH CO., WASHINGTON, D. C.

UNITED STATES PATENT OFFICE.

EDWARD T. BURROWES, OF PORTLAND, MAINE.

COLLAPSIBLE WINDOW-SCREEN.

1,188,411. Specification of Letters Patent. Patented June 27, 1916.

Application filed May 25, 1915. Serial No. 30,364.

To all whom it may concern:

Be it known that I, EDWARD T. BURROWES, a citizen of the United States, residing at Portland, in the county of Cumberland and State of Maine, have invented certain new and useful Improvements in Collapsible Window-Screens, of which the following is a specification.

This invention relates to window screens designed for the purpose of excluding insects, and more particularly to rolling or collapsible screens of the type shown in my prior application Serial No. 2841, filed Jan. 18, 1915.

The objects of the invention are to provide improved and simplified means for supporting such a screen upon the upper sash of a window, for holding the lower end of the screen in contact with the sill, and for supporting the weather shield in position.

In order that the invention may be readily understood, reference is had to the accompanying drawings, in which,

Figure 1 is a sectional perspective view of the lower part of a window, showing my improved screen applied thereto, the lower sash being omitted; Fig. 2 is a sectional elevation through the middle portion of such a window, showing the screen rolled or stored in inoperative position; Fig. 3 is a somewhat similar fragmentary section, showing a different form of weather shield and means for supporting the same; Fig. 4 is a similar view showing another means for supporting the weather shield; Fig. 5 is a front elevation of the supporting means shown in Fig. 4; Fig. 6 is a transverse section illustrating a still further modified form of supporting bar and means for securing a weather shield thereto; Fig. 7 is a front elevation of the lower part of the upper sash showing a different means of holding the supporting bar thereto, the parts being separated; and, Fig. 8 is a cross section of such modified construction with the parts assembled.

Referring to the drawings in detail, 1 designates the window frame, 2 the lower sash runway, 3 the parting bead, 4 the blind stop, and 5 the window sill, all of which may be of the usual or any desired construction.

6 designates the upper sash, and 7 the lower sash, while 8 indicates the runway in which the upper sash slides.

The screen itself is designated at 9, and is preferably of flexible, specially treated fibrous netting. This netting is secured at one end to an upper bar 10, which may be of rectangular cross section, as shown in Figs. 1 and 2. The preferred method of securing the netting to the bar is by means of a longitudinal key 12, inserted in a groove in the upper face of the bar in such a manner as to bind the netting in the groove. At its other end, the netting 9 is wound around a bar or roller 11, preferably of circular section, as shown in Figs. 1 and 2, which bar or roller rests upon the sill 5. The netting at its edges lies in contact with a strip 13, secured to the blind stop 4, as by means of nails 14, in the same manner as shown in my prior application above referred to.

The method of supporting the bar 10 in the present application consists in the use of a plurality of turning hooks, each of which consists of a screw-threaded shank 15, adapted to enter the lower rail of the upper sash 6, and an arm 16, extending at right angles to the shank, and adapted to engage under the bar 10, as clearly shown in the drawings. The free end of the arm 16 is preferably provided with a lug or button 17, projecting at right angles thereto by means of which the hook may be conveniently turned by hand. It will be understood that the hooks are screwed into the window sash and turned up until the arm 16 is at such a distance from the sash as to just firmly clamp the upper bar 10 between itself and the sash. Any suitable number of these hooks may be employed, depending upon the width of the window.

As windows vary in height, the length of the netting 9 is made sufficient to fit the largest window, and when used on a smaller window the excess length is taken care of by being wound upon the roller 11. In other words, after the bar 10 has been clamped in position as described, the screen is unwound from the roller 11 until such roller reaches and rests upon the window sill, any excess material being allowed to remain upon the roller. In order to hold the roller in firm contact with the sill so as to maintain the screen taut and operative to exclude insects, I employ in the present case one or more turning hooks 15^a, similar in all respects to the hooks utilized for holding the bar 10. These hooks 15^a are screwed into the window sill, as shown in Fig. 1, until they firmly grasp the roller

11 and hold it securely. In order to prevent wearing or cutting of the netting which remains on the roller, by the hook 15ª, I provide a wear plate 18. This is preferably formed of sheet metal curved on the same radius as the roller 11 and snugly fitting the same. After it has been definitely determined to what extent the screen shall be unwound from the roller, to give it the proper length, this wear plate 18 is placed on the upper side of the roller over the netting and nailed or tacked in position. The hook 15ª then bears against this plate and the netting itself is thus protected from wear. Should it be desired to use the screen on a longer window, the plate can easily be removed and, after the netting has been unwound to the proper length, the plate can be replaced. It will, of course, be understood that one of these wear plates is provided for each hook 15ª, any desired number of such hooks and plates being used, according to the width of the window.

In order to maintain the roller 11 in its upper or stored position, as indicated in Fig. 2, I provide a plurality of turning hooks very similar to those above described but having longer shanks 19. The shank of each of these hooks is screw-threaded into the upper sash 6 and carries at its free end an arm 20, projecting at right angles to the shank and adapted to engage underneath the roller 11. When it is desired to unroll the screen and bring it into operative position, these supporting hooks are given a 90 degree turn, which removes the arms 20 from beneath the roller and permits the roller to descend, the ends thereof traveling freely in the runways 8, as will be readily understood. In the same way the bars 10 and 11 may be released from contact with the sash and sill, respectively, by rotating the respective hooks through 90 degrees.

At 21 I have designated a weather shield generally similar to that shown in my prior application above referred to. This shield in the present construction is supported simply by being clamped between the bar 10 and the upper sash 6. In practice, it is preferable to secure the shield to the top of the bar 10 by means of tacks 22, so as to facilitate placing it in position. In this way the weather shield is in reality carried by the bar 10, while in my former application it is attached to the window sash 6.

Instead of the shield 21 of the shape shown in Fig. 2, I may employ simply a flat piece of material, as shown at 23 in Fig. 3. In this case the supporting bar 10ª has its outer edge beveled so as to give the proper slant to the sheet 23, such sheet being held against the beveled edge of the bar 10ª by means of a strip 24, preferably of sheet metal, which may be secured to the bar 10ª by means of nails or screws 25. In Figs. 4 and 5, I have shown still a different construction, in which the flat sheet or weather shield 23 is supported on a bar 10ᵇ, by means of a metallic strip 26, such strip having tongues 27 struck out therefrom at intervals. The upper edge of the sheet is frictionally held under these tongues, as shown in Fig. 4, and rests against the outer surface of the strip 26. By virtue of this construction the shield 23 may be readily replaced or renewed, when necessary, without disturbing any of the other parts of the screen.

In Fig. 6, I have illustrated how a supporting bar 10ᶜ of octagon shape may be employed. The netting 9 is secured to the top of such bar under a strip 28, which strip also serves to grip the shield 23 between itself and the adjacent face of the octagonal bar, thus giving a slant of 45 degrees to the shield.

Instead of the turning hooks above described for supporting the bar 10, I may employ a bar 10ᵈ, as shown in Fig. 7. This bar is provided with a plurality of buttonhole slots 29, extending through the same, and is adapted to be held in position under the sash 6 by means of screw-eyes 30, the heads of which extend through the slots 29, and the shanks of which screw into the sash. It is obvious that by turning the screw-eyes through 90 degrees the heads may be made to extend at right angles to the slots 29 and thus lock the bar in position.

What I claim is:

1. The combination with a window having the usual upper sash, of a flexible screen, a bar to which said screen is attached, and a plurality of turning hooks secured to the bottom of said sash and having horizontally extending arms engaging under said bar, to support the same, said hooks having shanks screwed vertically into said sash, whereby the effective length of said hooks can be varied so as to tightly clamp said bar against the sash.

2. The combination with a window having the usual upper sash, of a flexible screen, a bar to which said screen is attached, and means for securing said bar to the bottom of said sash, said means comprising a plurality of members each having a horizontally extended head which when in one position engages under said bar, and which, when turned ninety degrees from such position, releases said bar, and each having a shank screwed vertically into said sash parallel with said screen, whereby their effective length may be adjusted.

3. The combination with a window having the usual upper sash, of a flexible screen, upper and lower bars to which the screen is attached at its ends, means for securing said upper bar to the window sash, and means for supporting the lower bar in raised or

inoperative position with the screen wound around the same, such means comprising a plurality of turning hooks set into said window and having arms adapted to engage under said bar.

4. The combination with a window having the usual upper sash, and sill, of a flexible screen, an upper bar to which the screen is attached at one end, a lower bar to which the other end of the screen is attached and around which it may be wound, means for securing the upper bar to the sash, and means for securing the lower bar in position on the sill, said last mentioned means comprising a turning hook set into said sill, and a wear plate secured to said lower bar over so much of the screen material as remains wound thereon, and adapted to be engaged by said hook.

5. The combination with a window having the usual upper sash, of a flexible screen, upper and lower bars to which said screen is attached, means for securing said upper bar to the sash, and an outwardly and downwardly extending weather shield secured to and carried by said upper bar.

6. The combination with a window having the usual upper sash, of a flexible screen, upper and lower bars to which said screen is attached, said upper bar having a beveled outer face, a weather shield comprising a flat sheet carried by said bar and extending parallel with the beveled face thereof, and a binding strip for holding said shield in position on said bar.

7. The combination with a window having the usual upper sash, of a flexible screen, upper and lower bars to which said screen is attached, said upper bar having a beveled outer face, a weather shield comprising a flat sheet carried by said bar and extending parallel with the beveled face thereof, and a binding strip having clips struck up therefrom for engaging said shield and holding it in position on said bar.

8. The combination with a window having the usual upper sash, of a flexible screen, upper and lower bars to which said screen is attached, said upper bar having a flat top and beveled outer face, a binding strip secured to the said flat face and extending over the beveled face of said bar, means for securing said bar to the sash, and a weather shield comprising a flat sheet lying parallel with said beveled face, and held in position by said strip.

In testimony whereof I have affixed my signature.

EDWARD T. BURROWES.

Copies of this patent may be obtained for five cents each, by addressing the "Commissioner of Patents. Washington, D. C."