Sept. 21, 1965 J. A. LOTSPEICH 3,207,428

ESCROW CUP FOR COIN-OPERATED VENDING MACHINE AND THE LIKE

Filed Aug. 15, 1962

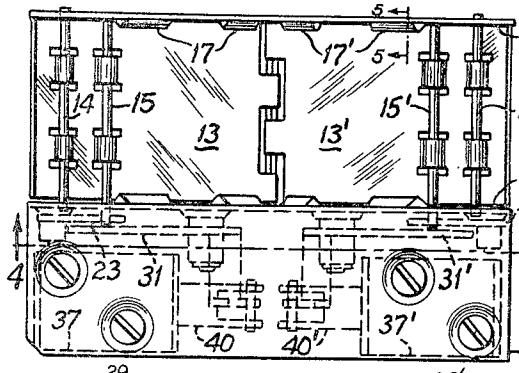

FIG. 1.

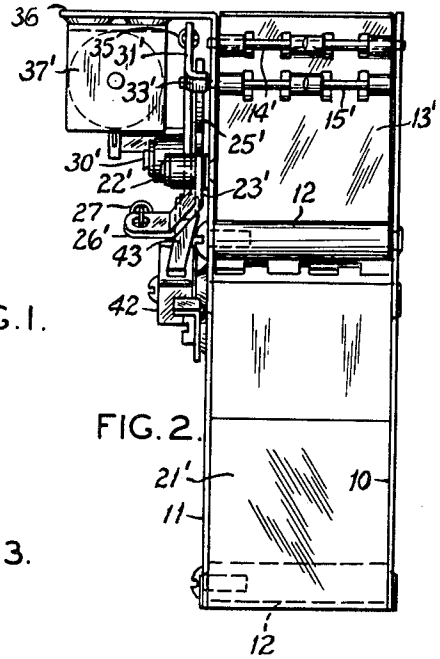

FIG. 2.

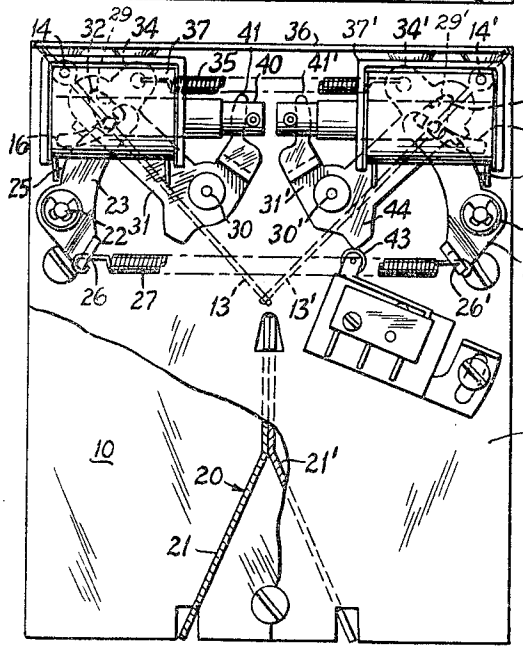

FIG. 3.

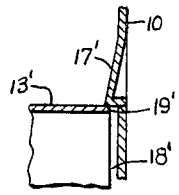

FIG. 5

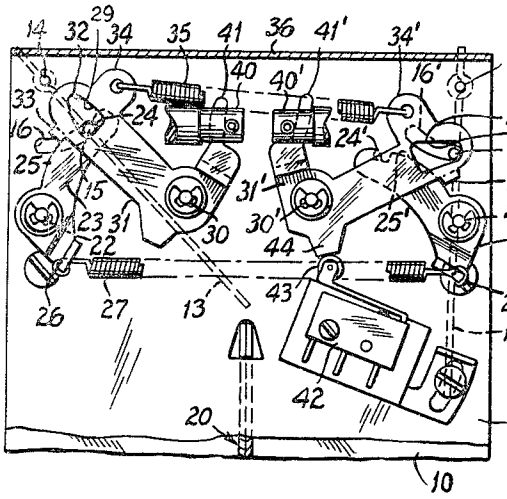

FIG. 4.

INVENTOR,
JOSEPH A. LOTSPEICH.
BY Cohn and Powell
ATTORNEYS.

United States Patent Office

3,207,428

Patented Sept. 21, 1965

1

3,207,428
ESCROW CUP FOR COIN-OPERATED VENDING MACHINE AND THE LIKE

Joseph A. Lotspeich, Florissant, Mo., assignor to Coin Acceptors, Inc., St. Louis, Mo., a corporation of Missouri

Filed Aug. 15, 1962, Ser. No. 217,210
8 Claims. (Cl. 232—57.5)

This invention relates generally to an escrow cup for receiving coins deposited in an associated coin-operated vending mechanism for selectively actuating the cup to deliver any coins to a predetermined coin-receiving means.

In a coin-operated vending machine, it is desirable to provide means, generally referred to as an escrow cup, for temporarily holding coins deposited in the machine rather than directing such coins directly to a cash box from which they cannot be returned. This escrow cup is designed to release coins deposited therein to either of two associated coin-receiving means depending upon whether such coins are to be retained in the machine or returned to the customer.

The escrow cup is responsive to delivery of merchandise to release the coins to a cash box and is also responsive to actuation of a coin-return button, if merchandise has not been delivered, so as to release such coins to a coin-return chute or the like.

An important object is to provide an escrow cup that is reliable in its operation, and which will upon actuation permit coins deposited therein to be released quickly without jostling them about or imparting any undesirable motion thereto.

Another important objective is to provide an escrow cup that is not susceptible to jamming because of the lodging of a coin within the cup in a crevice or the like.

A further important objective is to provide a cup having a pair of pivotally mounted gates or doors which are adapted to be positively locked when in their closed positions so as to prevent release of coins deposited therein except upon actuation of gate-opening means associated therewith.

Still another important objective is realized by the provision of a housing forming a coin container, the housing having a pivotally mounted gate that constitutes a wall of such container, and by the provision of pivotally mounted levers that cooperate to retain the gate selectively in a closed position and to release and open the gate.

An important objective is realized by the provision of resilient means connected to the levers of the operating mechanism, the resilient means tending to urge the levers in a direction to close and lock the gate.

Another important object is afforded by the structural arrangement of the first and second levers so that the second lever, upon rotation, cams the first lever to release the gate and subsequently pivots the gate toward an open position upon continued rotation. This advantageous functional result is obtained because the second lever includes a lost-motion connection with the gate.

Yet another important objective is realized by providing a pair of side gates between and pivotally suspended on a pair of spaced, parallel walls, the gates being movable to a closed position to form a V-shaped structure that cooperates with the walls to provide a coin container. The operating mechanism includes a pair of pivotally mounted levers cooperating with each gate to hold the gate selectively in a closed position and to release its associated gate for pivoting the gate toward an open position.

Another important objective is achieved by the provision of internal shoulders on the rear and front walls forming the coin container, the shoulders overlapping the side margins of the gates and engaging the gates in the closed position to hold any coins in the container away

2

from any crevice provided by the gate side margins and associated adjacent walls in order to preclude jamming or other obstructive action.

An important objective is to provide an escrow cup that is simple and durable in construction, economical to manufacture and assemble, highly efficient in operation, and which is fully automatic.

The foregoing and numerous objects and advantages of the invention will more clearly appear from the following detailed description of a preferred embodiment, particularly when considered in connection with the accompanying drawing, in which:

FIG. 1 is a top plan view of the escrow cup;

FIG. 2 is a side elevational view as seen from the right of FIG. 1;

FIG. 3 is a front elevational view, partially cut-away to more clearly illustrate the coin-receiving means;

FIG. 4 is a fragmentary front elevational view as seen along line 4—4 of FIG. 1, illustrating the operating mechanism in a position so that one of the gates is opened, and

FIG. 5 is a cross sectional view as seen along line 5—5 of FIG. 1.

Referring now by characters of reference to the drawing, it will be seen that in the embodiment illustrated the escrow cup comprises left and right hand portions which are symmetrical. For this reason, corresponding elements in the two symmetrical portions will be identified by corresponding numerals, but the numerals used to identify elements on the right hand side in FIGS. 1, 2, 3 and 4 will be primed.

A housing is provided which includes a rear wall **10** and a spaced, parallel front wall **11**. A plurality of elongate cylindrical spacers **12**, three in the embodiment disclosed, are disposed endwise between and bridge the rear and front walls **10** and **11**.

Disposed between the walls **10** and **11** are a pair of gates **13** and **13'**. These gates **13** and **13'** are pivotally mounted on hinge pins **14** and **14'** that are attached to and extend between the rear and front walls **10** and **11**. Under normal operating conditions, as will be subsequently described, the gates **13** and **13'** constitute side walls for the housing and are movable to a closed position to form a V-shaped structure that cooperates with the rear and front walls **10** and **11** to provide a coin container.

Referring to the left hand portions of FIGS. 1, 2 and 3, the gate **13** carries a rod **15** spaced from the associated hinge pin **14**. The outermost end of rod **15** extends through a short arcuate slot **16** formed in front wall **11**. The rod **15** constitutes a locking element for the gates **13** and **13'**. As the gate **13** swings about its hinge pin **14**, the locking rod **15** will move along the arcuate slot **16**. As will appear, the rod **15** cooperates with other operative parts so as to constittue a locking element for the gate **13**.

Provided on each of the rear and front walls **10** and **11** are a plurality of internal shoulders **17** that overlap the side margins of the gate **13**. These shoulders **17** engage the gate **13** in its closed position. The shoulders **17** taper downwardly from each wall toward the opposite wall and are relatively spaced so as to preclude any coin from wedging or otherwise obstructing the crevice or clearance **18** between the gate side margins **19** and the closely adjacent walls **10** and **11**.

The right hand portion of FIGS. 1, 2 and 3 has the same structure which is indicated by the identical reference numerals that are primed.

Coin-receiving means are illustrated generally at **20** in FIG. 3. This means may simply comprise a divider or guide having two separate coin chutes **21** and **21'** disposed beneath respective sides of the escrow cup, one chute **21** leading to a cash box within the associated vending machine and the other chute **21'** to a coin return.

Again referring to the left hand portion (FIGS. 1, 2 and 3), a first lever **23** is pivotally mounted by pin **22** to the front wall **11**. On one side of the pivot pin **22** of the first lever **23**, there is provided a hook **24** adapted to engage and receive the extended end portion of gate rod **15** constituting the lock element. Along one side of the first lever **23** is a camming surface **25** leading to the hook **24**. The purpose and functional advantages of the camming surface **25** will become apparent upon further detailed description of parts.

On the opposite side of pivot pin **22**, the first lever **23** is provided with a tab **26**.

Again, the right hand portion is identical in structure, the corresponding parts being indicated by the same reference numerals, but primed.

A coil tension spring **27** constituting a resilient means extends between and has its opposite ends attached to the tabs **26** and **26'**. It will be understood that the spring **27** tends to urge each of the first levers **23** and **23'** in a direction about their respective pivot pins **22** and **22'** so that the hooks **24** and **24'** engage and retain the gate rods **15** and **15'** when the gates **13** and **13'** are disposed in the closed position as is illustrated best in FIG. 3. The first levers **23** and **23'** serve to hold the gates **13** and **13'** in the closed position until such gates are selectively released and serve to reengage and retain the gates subsequently when the gates are returned to their closed position.

Again, referring to the left hand portion of FIGS. 1, 2 and 3, a second lever **31** is pivotally mounted to the front wall **11** on pivot pin **30**. The second lever **31** is provided with a recess or opening **32** adapted to receive the lock end portion of gate rod **15**. The recess **32** is defined by a margin **29** that engages the lock element or gate rod **15** upon rotation of the second lever **31** in either direction. It will be noted that connection between the gate rod **15** is loose in the lever opening **32** so as to provide a relative lost-motion therebetween upon initial rotation of the second lever **31**. Cam **33** is carried by the second lever **31** and is adapted to engage and follow the camming surface **25** formed on the first lever **23**.

Upon initial rotation of the second lever **31** in one direction the cam **33** will move along the camming surface **25** and hence urge the associated first lever **23** in a direction to release the gate rod **15** from lever hook **24**. This action is accomplished by the lost-motion of the gate rod **15** in the lever opening **32**. After the gate rod **15** is released, the second lever **31** upon continued rotation then moves the gate **13** toward an open position upon engagement of the margin **29** defining the recess **32** with the gate rod **15**.

The right hand portion of FIGS. 1, 2 and 3 has the same structure and the corresponding parts have the same reference numerals, but primed.

Each of the second levers **31** and **31'** is provided with a pair of tabs **34** and **34'** respectively. A coil tension spring **35** constituting a resilient means operatively interconnects the lever tabs **34** and **34'**, and tends to urge the second levers **31** and **31'** about the pivot pins **30** and **30'** toward the closed position.

As will best appear in FIG. 2, the front wall **11** is provided with an overhanging, horizontal ledge **36**. A pair of solenoids **37** and **37'** are attached to the underside of ledge **36**. The solenoid **37** includes an armature **40** that is operatively connected to the second lever **31** by a projecting finger **41**. Similarly, the solenoid **37'** includes an armature **40'** that is connected to the second lever **31'** by finger **41'**.

A switch **42** is attached to the front wall **11**, the switch **42** including an actuating arm **43** engageable with a projection **44** on the second lever arm **31'**. The switch **42** is conditioned upon pivotal movement of second lever arm **31'** and is operable through suitable circuits to a vending mechanism to preclude operation of the vending mechanism while the gate **13'** is open, and thereby preclude actuation of solenoid **37** and hence preclude pivotal movement of second lever arm **31**.

It will be assumed that the appropriate coins have been placed into the vending machine and have been introduced into the container formed by the rear wall **10**, front wall **11** and V-shaped structure or side walls provided by the gates **13** and **13'** when disposed in the closed position. The gates **13** and **13'** are locked in the closed position by the connection of the gate rods **15** and **15'** in the hooks **24** and **24'** of first levers **23** and **23'**. The spring **27** tends to urge the first levers **23** and **23'** in a direction to hold the gate rods in such hooks. The spring **35** tends to rotate the second levers **31** and **31'** in a direction to hold the gates **13** and **13'** in the closed position and to permit locking engagement of the gate rods in the first lever hooks.

First it will be assumed that with coins in the container the solenoid **37'** is actuated to move the armature **40'** inwardly, and thereby rotate the second lever **31'** in a clockwise direction as shown in FIG. 4. As the second lever **31'** rotates against the loading of spring **35**, the cam **33'** rides over the camming surface **25'** of the first lever **23'**, and thereby rotates the first lever **23'** in a counterclockwise direction to release the gate rod **15'** from the lever hook **24'**.

As stated previously, the initial movement of the recess margin **29'** of the second lever **31'** causes a release of the gate rod **15'** from the first lever **23'** before the second lever **31'** allows or causes the gate **13'** to be moved from the closed to the open position. This action is rendered by the lost-motion connection of the gate rod **15'** in the lever opening **32'**.

After release of the gate rod **15'**, the gate will fall open under gravity and/or will be urged downwardly by engagement of the second lever **31'** with the gate rod **15'** in order to move the gate **13'** from its closed position as shown in FIG. 3 to its open position, as shown in FIG. 4. When the gate **13'** is opened, the coins fall from the container into the coin return chute **21'**.

It will be noted that as the second lever **31'** rotates upon actuation of solenoid **37'**, the lever projection **44** rotates the switch **42** that is operatively connected by suitable circuits to the vending mechanism to prevent the vending mechanism from functioning to vend merchandise, and to prevent energization of solenoid **37**. With this arrangement it is not possible for anyone to hold the gate **13'** open by a wire, insert coins which would be returned and yet obtain merchandise by vending action.

After the coins have been returned, solenoid **37'** will be automatically deenergized. Upon deenergization, the spring **35** tends to rotate the second lever **31'** counterclockwise from the open position shown in FIG. 4, to the closed position shown in FIG. 3. As the second lever **31'** is rotated, the second lever **31'** raises the gate **13'** from its open position to its closed position by the interconnection of recess margin **29'** with the gate rod **15'**. When the gate **13'** is located in its closed position, the gate rod **15'** will snap into the hook **24'** of the first lever **23'** under the loading of spring **27** that tends to urge the first lever **23'** in a clockwise direction. The mechanism is now conditioned for subsequent use.

It will now be assumed that an appropriate number of coins are deposited in the container, and that the vending mechanism is consequently actuated and that the solenoid **37** is energized, the solenoid **37** pulling its armature **40** inwardly to rotate the second lever **31** in a counterclockwise direction to effect release of the gate rod **15** from the first lever hook **24** upon initial movement and to move the gate **13** from its closed position to its open position upon continued rotation, in the manner previously described. When gate **13** is opened, the coins fall from the container into the chute **21**, and thence into a cash box.

After the coins have been deposited in the cash box and the merchandise vended, the solenoid **37** is auto-

matically deenergized. Immediately, the action of spring **35** rotates the second lever **31** clockwise to raise the gate **13** from its open position to its closed position through its connection with the gate **15**. When the gate **13** is located in its closed position, the gate rod **15** will automatically snap into the first lever hook **24**, the compressive action of spring **27** tending to rotate the first lever **23** counterclockwise to obtain this result.

I claim as my invention:

1. In an escrow cup for coin-operated vending machines and the like:

(a) a housing providing a coin container, said housing containing a pivotally mounted gate that constitutes a wall of said container, the gate including a lock element,

(b) a pivotally mounted first lever selectively engaging said lock element and retaining said gate in a closed position,

(c) a pivotally mounted second lever operatively connected and attached to said lock element and engaging said first lever, said second lever camming said first lever to disengage the lock element and release said gate and subsequently pivoting said gate by the lock element to an open position upon rotation of said second lever in one direction,

(d) means for selectively rotating said second lever, and

(e) the second lever by its connection and attachment to the lock element pivoting the gate to a close position upon rotation of the second lever in the other direction.

2. In an escrow cup for coin-operated vending machines and the like:

(a) a housing providing a container, said housing including a pivotally mounted gate that constitutes a wall of said container, the gate including a lock element,

(b) a pivotally mounted first lever selectively engaging said lock element and retaining said gate in a closed position,

(c) a pivotally mounted second lever having a recess that receives said lock element loosely to provide a relative lost-motion connection yet attachment between the second lever and lock element, the recess being defined by a margin that engages the lock element upon rotation of the second lever in either direction, said second lever upon rotation in one engaging direction engaging and camming said first lever to disengage the lock element and release the gate as permitted by the lost-motion connection, and said second lever subsequently pivoting the gate by engagement of the recess margin with the lock element toward an open position upon continued rotation in the same direction,

(d) means for selectively rotating said second lever, and

(e) the second lever by engagement of the recess margin with the lock element pivoting the gate to a closed position upon rotation of the second lever in the other direction.

3. In an escrow cup for coin-operated vending machines and the like:

(a) a housing providing a coin container, said housing including a pivotally mounted gate that constitutes a wall of said container, the gate including a lock element spaced from the pivot axis of said gate,

(b) a pivotally mounted first lever including a hook selectively engaging said lock element and retaining said gate in a closed position, said first lever including a camming surface,

(c) a pivotally mounted second lever provided with an opening that receives said lock element loosely to provide a lost-motion connection betwen the second lever and lock element, the opening being defined by a margin that engages the lock element upon rotation in either direction,

(d) said second lever being provided with a cam portion engaging the camming surface of the first lever to move the first lever pivotally in a direction to disengage the lever hook from the lock element and release the gate as permitted by the lost-motion connection upon rotation of said second lever in one direction, said second lever subsequently pivoting the gate by engagement of the opening margin with the lock element toward an open position upon continued rotation in the same direction,

(e) a spring operatively connected to said second lever tending to urge the second lever in a direction to close the gate by engagement of the opening margin with the lock element, and

(f) a spring operatively connected to said first lever tending to move the first lever in a direction to cause operative engagement of the hook with said lock element and retain the gate in the closed position.

4. In an escrow cup for coin-operated vending machines and the like:

(a) a housing including spaced, parallel rear and front walls,

(b) a pair of side gates disposed between and pivotally suspended on said walls, said gates being movable to a closed position to form a V-shaped structure that cooperates with said walls to provide a coin container,

(c) a coin-receiving means disposed beneath each of said gates,

(d) a pair of pivotally mounted first levers each including a locking connection with one of said gates for selectively retaining said gate in a closed position,

(e) a pair of pivotally mounted second levers each including a lost-motion connection with one of said gates, each said second lever upon rotation camming one of said first levers to release its associated gate as permitted by the lost-motion connection between the second lever and said gate and subsequently engaging and pivoting said associated gate by its lost-motion connection toward an open position upon continued rotation of said second lever,

(f) means for rotating one of said second levers to open its associated gate whereby any coins in the container will be dropped to a predetermined one of said coin-receiving means, and

(g) the second lever engaging and pivoting the gate through its lost-motion connection to a closed position upon rotation of the second lever in the opposite direction.

5. In an escrow cup for coin-operated vending machines and the like:

(a) a housing including spaced, parallel rear and front walls,

(b) a pair of side gates disposed between and pivotally suspended on said walls, said gates being movable to a closed position to form a V-shaped structure that cooperates with said walls to provide a coin container, each gate including a lock element,

(c) a coin-receiving means disposed beneath each of said gates,

(d) a pair of pivotally mounted first levers each selectively engaging one of said lock elements and retaining its associated gate in a closed position,

(e) a pair of pivotally mounted second levers each operatively connected to one of said lock elements and engaging its associated first lever, each said second lever upon rotation camming one of said first levers to disengage its associated lock element and release its associated gate and subsequently pivoting said associated gate by engagement of the second lever with the associated lock element through their connection to an open position,

(f) means for rotating a selected one of said second levers to open its associated gate whereby any coins

in the container will be dropped to a predetermined one of said coin-receiving means, and

(g) means rotating the second lever in the opposite direction so that the second lever through its connection with the lock element engages the lock element to pivot the associated gate to a closed position.

6. The combination and arrangement of elements as recited above in claim 5, in which

(h) the last said means is a resilient means extending between and interconnetcing said second levers tending to urge each said second lever in a direction to close its associated gate, and

(i) resilient means extending between and interconnecting said first levers tending to urge each said first lever into locking engagement with the lock element of its associated gate.

7. In an escrow cup for coin-operated vending machines and the like:

(a) a housing including spaced, parallel rear and front walls,

(b) a pair of side gates disposed between and pivotally suspended on said walls, said gates being movable to a closed position to form a V-shaped structure that cooperates with said walls to provide a coin container, each said gate including a lock element,

(c) a coin-receiving means disposed beneath each of said gates,

(d) a pair of pivotally mounted first levers each selectively engaging one of said lock elements and retaining its associated gate in a closed position,

(e) a pair of pivotally mounted second levers each having a recess that receives one of said lock elements loosely to provide a relative lost-motion connection, the recess being defined by margin that engages the lock element, each said second lever upon rotation engaging and camming one of said first levers to disengage its associated lock element and release the associated gate as permitted by the lost-motion connection, and each said second lever subsequently pivoting the associated gate by engagement of the recess margin with the associated lock element toward an open position upon continued rotation,

(f) means for rotating a selected one of said second levers to open its associated gate whereby any coins in the container will be dropped to a predetermined one of said coin-receiving means, and

(g) the recess margin of each second lever engaging the associated lock element upon rotation of the second lever in the other direction so as to close the gate.

8. In an escrow cup for coin operated vending machines and the like:

(a) a housing including spaced, parallel rear and front walls,

(b) a pair of side gates disposed between and pivotally suspended on said walls, said gates being movable to a closed position to form a V-shaped structure that cooperates with said walls to provide a coin container, each said gate including a projecting rod spaced from its pivot axis,

(c) a coin receiving means disposed beneath each of said gates,

(d) a pair of pivotally mounted first levers each including a hook selectively engaging one of said gate rods and retaining its associated gate in a closed position,

(e) a pair of pivotally mounted second levers each being provided with an opening that receives one of said gate rods loosely to provide a relative lost-motion connection, each said second lever upon rotation engaging and camming one of said first levers to disengage its associated gate rod from the first lever hook and to release the associated gate as permitted by the lost-motion connection, and each said second lever subsequently engaging its associated gate rod to pivot its associated gate toward an open position upon continued rotation,

(f) means for rotating a selected one of said second levers to open its associated gate whereby any coins in the container will be dropped to a predetermined one of said coin-receiving means,

(g) a spring extending between and interconnecting said second levers tending to urge each said second lever in a direction so that the second lever engages its associated gate rod to close its associated gate, and

(h) another spring extending between and interconnecting said first levers tending to urge each said first lever in a direction to cause operative connection of the lever hook with its associated gate rod.

References Cited by the Examiner

UNITED STATES PATENTS

272,591	2/83	Slawson	232—57
2,253,863	8/41	Melick	232—57
2,698,713	1/55	Timms	232—57
2,782,984	2/57	Hoban	232—57
3,030,008	4/62	Jensen	232—57

FRANK B. SHERRY, *Primary Examiner.*