May 20, 1958 W. A. BOETTCHER 2,835,290

PRESSES FOR DRILLING FLOORING STRIPS

Filed Aug. 10, 1953 3 Sheets-Sheet 1

Fig. 3

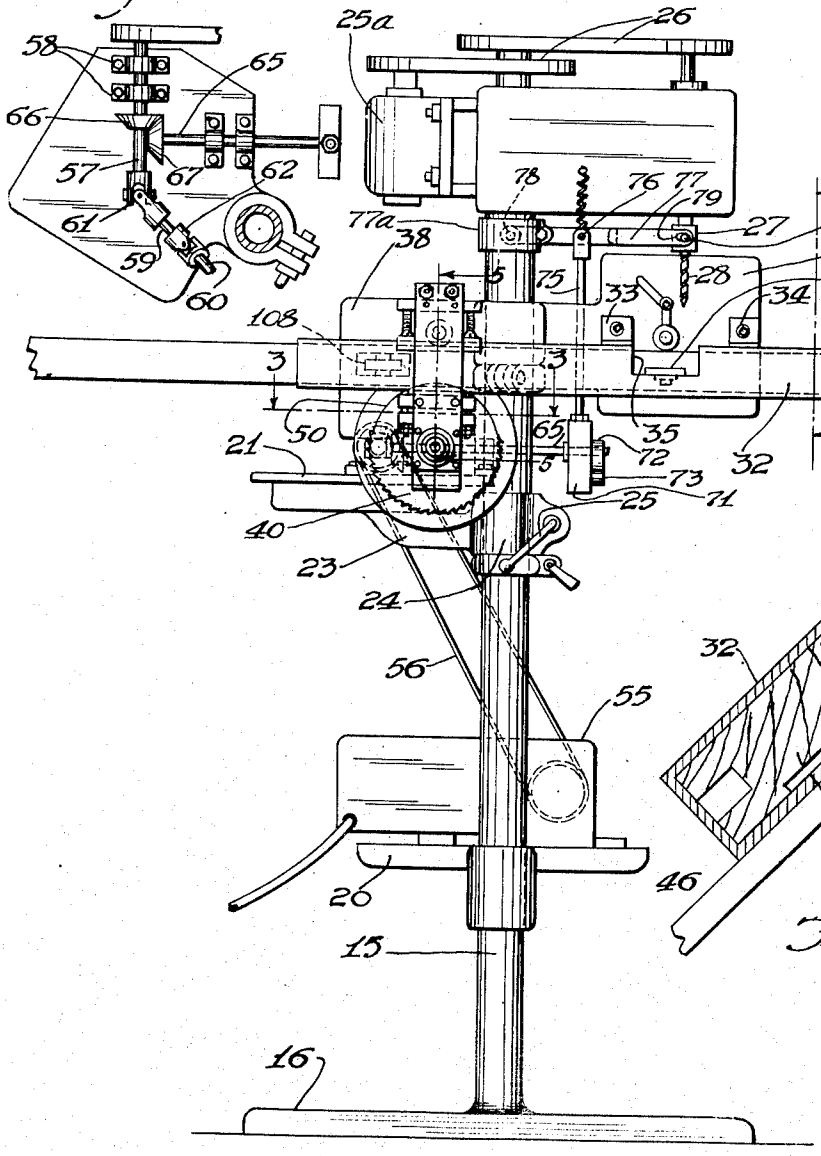

Fig. 1

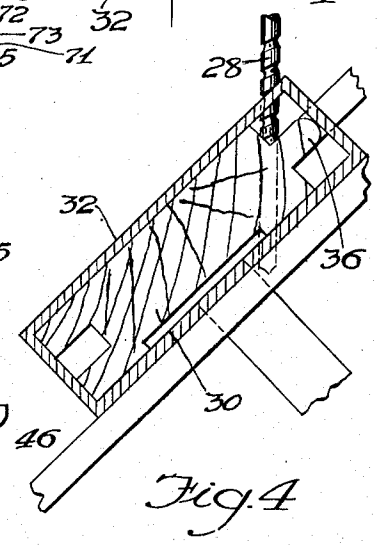

Fig. 4

INVENTOR.
Wm. A. Boettcher
BY
Stevens & Batchelor
Attorneys.

May 20, 1958 W. A. BOETTCHER 2,835,290

PRESSES FOR DRILLING FLOORING STRIPS

Filed Aug. 10, 1953 3 Sheets-Sheet 2

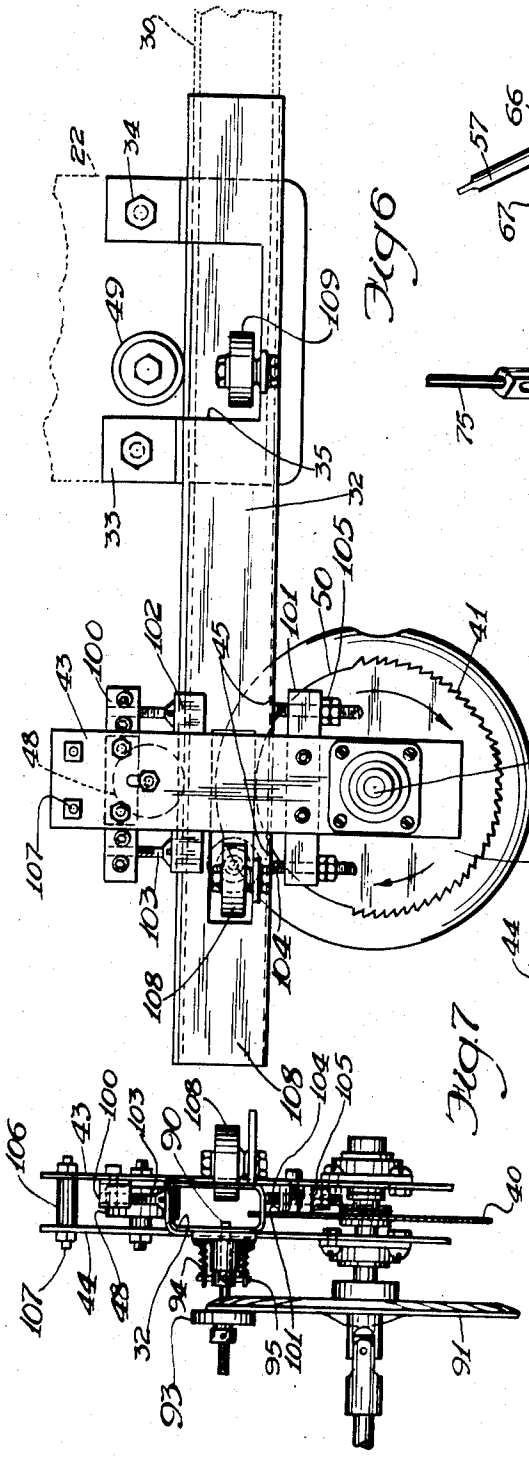

Fig. 6

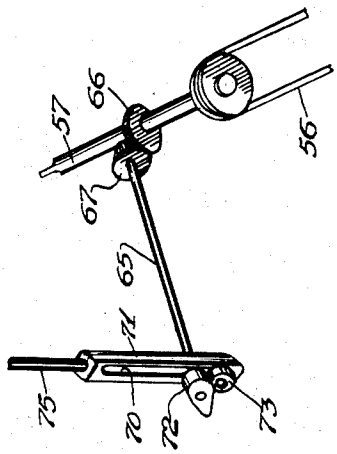

Fig. 10

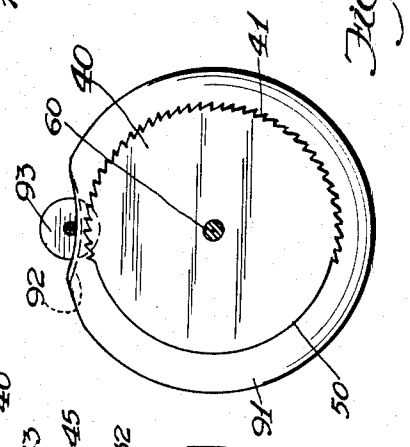

Fig. 9

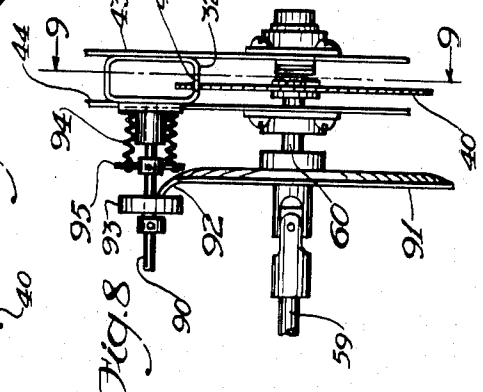

Fig. 8

Fig. 7

INVENTOR:
Wm. A. Boettcher
BY
Stevens & Batchelor
Attorneys.

May 20, 1958 W. A. BOETTCHER 2,835,290

PRESSES FOR DRILLING FLOORING STRIPS

Filed Aug. 10, 1953 3 Sheets-Sheet 3

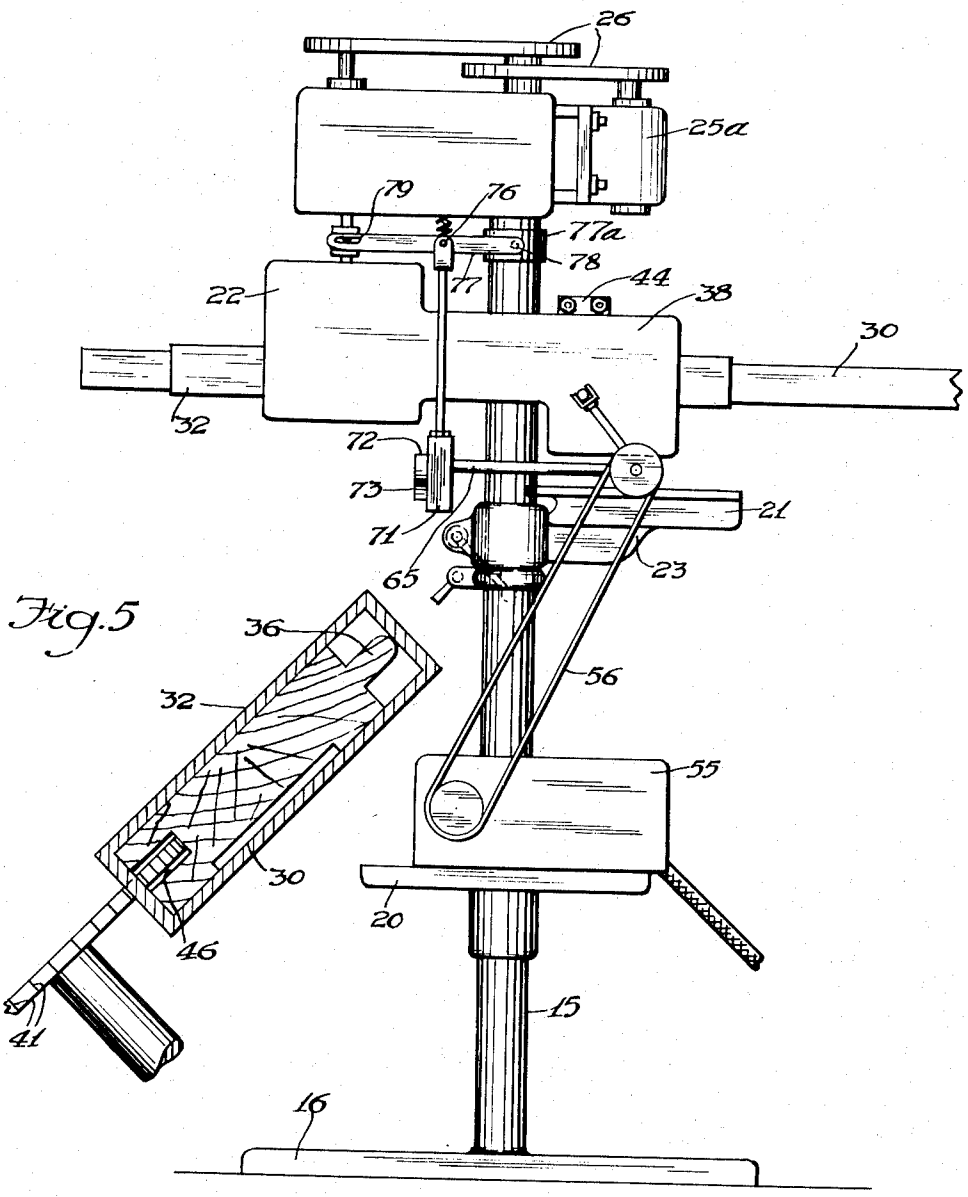

Fig. 5

Fig. 2

INVENTOR:
Wm. A. Boettcher
BY
Stevens & Batchelor
Attorneys.

United States Patent Office 2,835,290 Patented May 20, 1958

2,835,290

PRESSES FOR DRILLING FLOORING STRIPS

William A. Boettcher, Chicago, Ill.

Application August 10, 1953, Serial No. 373,157

7 Claims. (Cl. 144—107)

My invention relates to machines for drilling the beads of flooring strips at an angle in longitudinal sequence in order to facilitate the driving of nails to secure the flooring without splitting the latter. Machines for this purpose have been devised in the past, but they are specially constructed and rather complicated, so that their cost is necessarily high. Thus, advantages secured by drilling the flooring strips are so greatly offset by the expense entailed in the purchase of such a machine that the facility thereof is dispensed with as a matter of economy. However, the desirability of drilling the flooring strips has prompted me to look into the facility of existing machinery for conversion to the special function, and one object of the present invention is to utilize the structure of the standard, floor-type drill press as a basis or foundation adaptable to the desired use.

A further object is to utilize certain units now forming part of a drill press for supporting and securing apparatus designed to receive and feed flooring strips.

Another object is to provide an apparatus for drilling flooring strips which employs the basic drilling mechanism of the drill press with a controlling adjunct.

An additional object is to provide an apparatus into which flooring strips may be fed from one end and automatically advanced and drilled without any further manual assistance.

A still further object is to provide a power feed for the strips which is positive and applied to the groove of the strip, so that the surfaces thereof may not be marred or otherwise injured by the feed.

Another object is to provide an apparatus which is adjustable to receive flooring strips of different cross-sectional sizes.

With the above objects in view, a better understanding of the invention may be had by reference to the accompanying drawings, in which—

Fig. 1 is a front elevation of the machine;

Fig. 2 is a rear elevation;

Fig. 3 is a section taken on the line 3—3 of Fig. 1;

Figs. 4 and 5 are, respectively, enlarged sections taken on the lines 4—4 and 5—5 of Fig. 1;

Fig. 6 is an enlarged duplication of a portion in the upper part of Fig. 1, showing the automatic strip feed in greater detail;

Fig. 7 is an end view of the showing in Fig. 6 from the left-hand side;

Fig. 8 is a view similar to Fig. 7, showing the position of certain parts changed;

Fig. 9 is a section taken on the line 9—9 of Fig. 8; and

Fig. 10 is a perspective view of a cam-controlled mechanism.

In accordance with the foregoing, specific reference to the drawings indicates the post of a standard, floor-type drill press at **15**, and the base thereof at **16**. The type of drill press under consideration receives a bed plate for the deposit of the work, but for the purpose of the present invention this facility is provided in three instances.

Thus, Fig. 1 shows that a bed plate **20** is carried by the post of the drill press in a low position, a bed plate **21** being carried in a higher position, and a bed plate **22** being carried in a still higher position. Each of these bed plates is extended from a bracket **23** carried by a clamp **24** which is slidable on the post **15** to any desired height and made fast by a lever **25**.

The bed plate **20** is designed to carry the power unit for the strip feeding mechanism, while the bed plate **21** supports means transmitting the drive to such mechanism. The bed plate **22**, however, is tilted at an angle, as seen in Fig. 4, and is designed to support the guide in which the floor strip is movable at intervals between the drilling operations.

The drilling mechanism employs the conventional motor **25***a* and transmission gearing **26**, in order to drive the chuck **27** and bit **28**, the chuck and bit being movable downwardly from the position shown in Fig. 1 in order to drill a hole obliquely in the bead of a flooring strip **30** positioned horizontally below the bit.

The flooring strip is fed into the machine by being inserted into one end of a guide, which is a horizontal tube **32** of rectangular cross-section, such end being the one at the left as seen in Fig. 1. Fig. 4 indicates that the tube **32** follows the contour of the flooring strip **30** closely, whereby to form a proper guide for the longitudinal feed thereof through the tube. The latter is formed with lugs **33** projecting from its upper side near the remote end, such lugs being bolted at **34** to the bed plate **22** in order to support the tube **32** on the same. It is seen that the tube is made with a cutout **35** on the upper side at a point between the lugs **33** in order to expose the upper edge of the flooring strip **30**, such edge containing the bead **36**, as seen in Fig. 4. Thus, with the strip disposed in the tilted position shown in this figure, the bit **28** may be made to descend during rotation and drill a hole in the base of the bead, as indicated in Fig. 4.

The bed plate **22** has an extension **38** on the opposite side of the post **15**, such extension forming a backing for the receiving portion of the tube **32**. It is intended that an automatic feed engage the strip after it has been inserted into the tube, in order to advance the strip a given distance, such as a foot, and fix the intervals at which the holes are drilled in the strip. The element mainly involved in the feed is a wheel **40** made with ratchet-type teeth **41** over a portion of its periphery. The wheel is journaled in the companion plates **43** and **44** of a frame straddling the tube **32**; and the same is made with a slot **45** in its bottom for the entry of the upper portion of the wheel. The latter is located in registration with the groove **46** of the flooring strip **30** and enters the same into biting engagement with the floor of the groove. The upper edge of the strip is backed by an initial top roller **48** carried by the frame **43—44**; and a similar remote roller **49** is carried by the bed plate **22** over the upper edge of the strip. The rollers **48** and **49** are made of rubber and designed to impose pressure on the strip in order to keep its initial portion in engagement with the feed wheel **40** and its advancing portion fast in the guiding tube **32** when the drill bit **28** descends. Fig. 6 shows that a portion **50** of the feed wheel is plain, and it is apparent that a partial turn of the feed wheel from the position shown in Fig. 6 in the direction indicated by the arcuate arrows will cause the wheel to bite into the strip **30** and advance it the prescribed distance in the tube **32**. As the toothed part of the wheel departs from the strip, the latter remains fixed, and it is obvious that at this time the drill bit is caused to descend and drill the hole in the strip.

The operation of the feed wheel **40** originates with a suitably geared motor **55** supported by the bed plate **20**. A belt drive **56** leads upwardly from the motor to a

cross-shaft 57 journaled in bearings 58 on the bed plate 21, as seen in Fig. 3. The shaft 57 is followed by a shaft 59 in the direction of the spindle 60 of the feed wheel, universal joints 61 and 62 being interposed in the line of shafts in order to accommodate the drive to the position of the feed wheel. The latter is thus operated continuously when the machine is used.

The periodical descent of the drill bit is procured by a branch drive from the cross-shaft 57. Thus, Fig. 3 shows that such shaft and a branch shaft 65 are connected by meshing bevel gears 66 and 67. As seen in Figs. 2 and 10, the shaft 65 leads through a slot 70 in a vertical loop bar 71 to terminate with a cam 72 on the remote side of the bar. The bottom portion thereof has a freely journaled roller 73 which is subject to the action of the cam 72 when the shaft 65 is in rotation in a manner to periodically depress the bar 71. The same extends upwardly with a rod 75 which is linked at 76 to a cross-arm 77. The latter is pivoted with one end to a drill post bracket 77*a*, as indicated at 78, while the other end is formed with a horizontal slot 79 to receive a side pin 80 from the chuck 27 of the drill. Thus, each turn of the shaft 65 creates a down pull on the cross-arm 77 and a drilling operation by the bit 28, and it is understood that the ratio of the gearing is designed to procure this operation in synchronism with the forward feed of the flooring strip 30 at the desired intervals.

It is proper that a point be located in the strip feed which fixes the distance of the first hole from the leading end of the strip, and such point is represented by a pin 90 which projects into the side of the tube 32 as a stop for the leading end of the strip. The spindle 60 also carries a cam wheel 91 which has a peripheral side wing 92 at one point. The face of the cam wheel 91 is normally in engagement with a collar 93 carried by the pin 90 and has no motive effect on the pin. However, when the side wing 92 of the cam wheel meets the collar 93, the latter is urged away from the tube 32, as shown in Fig. 8, withdrawing the pin 90 from the latter; and the collar 93 is made to bear against the cam wheel 91 by a pair of draw springs 94 connected to a cross-pin 95 passing through the pin 90. The action just mentioned permits the flooring strip to be inserted into the tube to a given point before the wheel feed takes hold, so that the intervals at which the strip is drilled are spaced equally from the leading end of the strip. The continued feed of the latter is of course a bar to the advance of the pin 90 into the tube 32 as long as the strip is lodged therein, so that the pin cannot become a bar or obstruction while a strip is contained in the tube.

Flooring strips come in several cross-sectional sizes, and the novel machine is adapted for the changes so occasioned. Each strip size obviously requires a tube 32 to fit the same, and the frame 44—43 therefore carries upper and lower cross-bars 100 and 101 for engaging the tube between them. Thus, the upper part of the tube carries an arch-shaped shield 102 as a base for a pair of screws 103 which are threaded into the cross-bar 100 according to the position of the tube; and the latter rests on lower screws 104 which are threaded through the lower bar 101 and made fast by nuts 105. The adjustments of the screws 103 and 104 also deal with the setting of the wheel 40 in relation to the new flooring strip, such adjustments operating to lift or lower the frame 44—43 for this purpose. The frame is made rigid by the interposition of spacers 106 between the plates 44 and 43, such spacers being secured by bolts 107. While the position of the flooring strip may be considered fairly rigid during travel and at the stopping point, such position is made more accurate by the provision of side rollers 108 and 109, these being of rubber and designed to take up any slack in the lateral position of the strip. The latter thus assumes the same position at every drilling point, eliminating vibration and tendencies to break the drill bit.

When the machine is to be used, the motors 25*a* and 55 are turned on and a strip of flooring inserted into the guide tube 32 to the extent of the stop pin 90. The feed wheel 40 now takes hold of the strip to advance it periodically the proper distance. The drill 27 will operate automatically to make the holes in the strip at intervals corresponding to the feed of the same.

It will now be apparent that the novel machine employs a conventional support for its operating units in the form of the well known floor-type drill press, eliminating the necessity of designing a special machine for this purpose. The post of a floor-type drill press is designed as a sturdy and fixed support for all the instrumentalities forming part of the press, and the main units involved comprise the several bed plates which are not only rigidly attached to the post, but also are rotatable to any lateral position and even tiltable by means forming a part of the drill press. Thus, the supports required for the strip drilling apparatus are provided for attachment in any desired number to the post of the drill press. As arranged, the supports provide for the mounting of the strip guiding tube in a position designed to receive the automatic feed and the drilling operation in the most convenient manner. Further, one of the bed plates is employed as a support for the gear leading to the automatic strip feed, and a simple connection is made from this gearing for the timing of the drill action in accordance with the stopping points of the strip. Further, the guiding tube for the strip carries its own frame, the latter including the support for the automatic feed and adjusting means for different sized tubes. The units of the mechanism are therefore grouped compactly in relation to the supporting post of the drill press and employ factors which are either found as standard or attachable to the post by simple application, or which may be fabricated by conventional machine methods. A drill press is thus had which employs basic supports to create an odd arrangement of instrumentalities for the particular type of work, using existing parts in most instances and saving the design and expense of a special machine for the purpose.

While I have described the invention along specific lines, various minor changes or refinements may be made therein without departing from its principle, and I reserve the right to employ all such changes and refinements as may come within the scope and spirit of the appended claims.

I claim:

1. An attachment for upright drill presses for drilling flooring strips, wherein the drill press has a supporting post surmounted by a drilling unit, comprising a bed plate clamped to the supporting post in a tilted position, a guide for a flooring strip carried by said bed plate, a second bed plate clamped to said supporting post in a horizontal position below the first bed plate, means mounted on the second bed plate for feeding the flooring strip periodically through said guide, said drilling unit including a drill operable in respect to the flooring strip, said guide being a tube of a cross-section similar to that of the flooring strip, said means including a feed wheel for the flooring strip, a journal for the feed wheel, a frame extended from the journal to clamp on both sides of said tube for the support of the feed wheel from the same, and means for adjusting the frame crosswise of the tube for varying the spacing between the feed wheel and the strip.

2. An attachment for upright drill presses for drilling flooring strips, wherein the drill press has a supporting post surmounted by a drilling unit, comprising a bed plate clamped to the supporting post in a tilted position, a guide for a flooring strip carried by said bed plate, a second bed plate clamped to said supporting post in a horizontal position below the first bed plate, means mounted on the second bed plate for feeding the flooring strip periodically through said guide, said drilling unit including a drill operable in respect to the flooring strip, said guide being a tube of a cross-section similar to that of the flooring strip, said means including a feed wheel engageable with

the floor of the groove in said flooring strip, a journal for the feed wheel, a frame extended from the journal to clamp on both sides of said tube for the support of the feed wheel from the same, and rubber rollers carried by the frame to back the edge of the flooring strip opposite from the grooved one and facilitate the engagement of the strip with the feed wheel.

3. An attachment for upright drill presses for drilling flooring strips, wherein the drill press has a supporting post surmounted by a drilling unit, comprising a bed plate clamped to the supporting post in a tilted position, a guide for a flooring strip carried by said bed plate, a second bed plate clamped to said supporting posts in a horizontal position below the first bed plate, means mounted on the second bed plate for feeding the flooring strip periodically through said guide, said drilling unit including a drll operable in respect to the flooring strip, said means including a feed wheel engageable with the strip and effective to advance the same a given distance during each revolution of the wheel, said guide being a tube of a cross-section similar to that of the strip, a stop element present in said tube to limit the insertion of a flooring strip to a desired point when the feed wheel is inactive in respect to the flooring strip, means for withdrawing said stop element, and a connection from the feed wheel to said withdrawing means effective to operate the same when the feed wheel assumes engagement with the flooring strip.

4. An attachment for upright drill presses for drilling flooring strips, wherein the drill press has a supporting post surmounted by a drilling unit, comprising a bed plate clamped to the supporting post in a tilted position, a guide for a flooring strip carried by said bed plate, a second bed plate clamped to said supporting post in a horizontal position below the first bed plate, means mounted on the second bed plate for feeding the flooring strip periodically through said guide, said drilling unit including a drill operable in respect to the flooring strip, said means including a feed wheel engageable with the strip and effective to advance the same a given distance during each revolution of the wheel, said guide being a tube of a cross-section similar to that of the strip, a stop element present in said tube to limit the insertion of a flooring strip to a desired point when the feed wheel is inactive in respect to the flooring strip, means for withdrawing said stop element, and a connection from the feed wheel to said withdrawing means effective to operate the same when the feed wheel assumes engagement with the flooring strip, said stop element being a spring-operated side pin, and said connection comprising a cam carried by the shaft of the feed wheel and effective to back the side pin out of the tube during said engagement.

5. An attachment for upright drill presses for drilling flooring strips, wherein the drill press has a supporting post surmounted by a drilling unit, comprising a bed plate clamped to the supporting post in a tilted position, a guide for a flooring strip carried by said bed plate, a second bed plate clamped to said supporting post in a horizontal position below the first bed plate, means mounted on the second bed plate for feeding the flooring strip periodically through said guide, said drilling unit including a drill

operable in respect to the flooring strip, said guide being one of an assortment of tubes corresponding in cross-section to flooring strips of different cross-sectional sizes, said means including a feed wheel for the flooring strip, a journal for the feed wheel mountable on the selected tube, and means for adjusting the transverse spacing of the journal relative to the tube to procure the working engagement of the feed wheel with the chosen flooring strip.

6. An attachment for upright drill presses for drilling flooring strips, wherein the drill press has a supporting post surmounted by a drilling unit, comprising a bed plate clamped to the supporting post in a tilted position, a guide for a flooring strip carried by said bed plate, a second bed plate clamped to said supporting post in a horizontal position below the first bed plate, means mounted on the second bed plate for feeding the flooring strip periodically through said guide, said drilling unit including a drill operable in respect to the flooring strip, said guide being one of an assortment of tubes corresponding in cross-section to flooring strips of different cross-sectional sizes, said means including a feed wheel for the flooring strip, a journal for the feed wheel mountable on the selected tube, means for adjusting the transverse spacing of the journal relative to the tube to procure the working engagement of the feed wheel with the chosen flooring strip, said adjusting means comprising side projections from the journal, and screws from the same directed to the edge portions of the guide.

7. An attachment for upright drill presses for drilling flooring strips, wherein the drill press has a supporting post surmounted by a drilling unit, comprising a bed plate clamped to the supporting post in a tilted position, a guide for a flooring strip carried by said bed plate, a second bed plate clamped to said supporting post in a horizontal position below the first bed plate, means mounted on the second bed plate for feeding the flooring strip periodically through said guide, said drilling unit including a drill operable in respect to the flooring strip, said guide being one of an assortment of tubes corresponding in cross-section to flooring strips of different cross-sectional sizes, said means including a feed wheel for the flooring strip, a journal for the feed wheel, a frame extended from the journal to clamp on both sides of the selected tube for the support of the feed wheel from the same, and means for adjusting the transverse spacing of the journal relative to the tube to procure the working engagement of the feed wheel with the chosen flooring strip.

References Cited in the file of this patent

UNITED STATES PATENTS

443,666	Bryant	Dec. 30, 1890
454,654	Kopacek	June 23, 1891
498,555	Kelchner	May 30, 1893
745,260	Stuart	Nov. 24, 1903
986,782	Trogdon	Mar. 14, 1911
1,041,343	Pinkett	Oct. 15, 1912
1,667,022	Wood	Apr. 24, 1928
2,333,025	Mayer	Oct. 26, 1943