(12) PATENT
(19) AUSTRALIAN PATENT OFFICE

(11) Application No. AU 200155921 B2
(10) Patent No. 782951

(54) Title
Disposable diaper

(51)6 International Patent Classification(s)
A61F 013/49

(21) Application No: 200155921

(22) Application Date: 2001.07.23

(30) Priority Data

(31) Number	(32) Date	(33) Country
2000-297574	2000.08.24	JP

(43) Publication Date : 2002.02.28
(43) Publication Journal Date : 2002.02.28
(44) Accepted Journal Date : 2005.09.15

(71) Applicant(s)
Uni-Charm Corporation

(72) Inventor(s)
Yasushi Sayama; Hironao Minato; Naomi Suzuki; Rumiko Shiraishi ; Yasushi Inoue

(74) Agent/Attorney
PHILLIPS ORMONDE and FITZPATRICK,367 Collins Street,MELBOURNE VIC 3000

(56) Related Art
US 6039906
US 5873868
US 4710189

A B S T R A C T

A disposable diaper includes a front waist region 20, a rear waist region 22, and a crotch region 21 extending therebetween, and an end portion 1c of the rear waist region 22 is provided with an elastic member 7 associated with a waist-opening and having transversely opposite side edges 7a and upper and lower edges 7b, 7c. A plurality of slits 8 extending through the diaper 1 in its thickness direction and extending in a longitudinal direction are arranged to be spaced one from another by a predetermined dimension in a waist-surrounding direction between the side edges 7b, 7c and spaced one from another by a predetermined dimension in the longitudinal direction between the vicinity of the upper edge 7b and the vicinity of the lower edge 7c.

AUSTRALIA

Patents Act

COMPLETE SPECIFICATION
(ORIGINAL)

Class Int. Class

Application Number:
Lodged:

Complete Specification Lodged:
Accepted:
Published:

Priority

Related Art:

Name of Applicant:

Uni-Charm Corporation

Actual Inventor(s):

Yasushi Sayama, Hironao Minato, Naomi Suzuki, Rumiko Shiraishi, Yasushi Inoue

Address for Service:

PHILLIPS ORMONDE & FITZPATRICK
Patent and Trade Mark Attorneys
367 Collins Street
Melbourne 3000 AUSTRALIA

Invention Title:

DISPOSABLE DIAPER

Our Ref : 648069
POF Code: 1647/76530

The following statement is a full description of this invention, including the best method of performing it known to applicant(s):

6006q

1A

DISPOSABLE DIAPER

This invention relates to a disposable wearing article adapted to absorb and to hold excretion discharged thereon.

Known to the applicant is an open-type disposable diaper including a liquid-pervious topsheet, a liquid-impervious backsheet and a liquid-absorbent core disposed between these two sheets wherein a pair of flaps extending outward from transversely opposite side edges of the core are formed with a plurality of slits extending in a longitudinal direction. These slits are formed in the flaps extending in front and rear waist regions so that they are spaced one from another by a predetermined dimension in the longitudinal direction and spaced one from another by a predetermined dimension in a waist-surrounding direction. The slits are widened in the waist-surrounding direction as the flaps are pulled in the waist-surrounding direction and thereupon a plurality of openings are defined in the flaps. With this known diaper put on a wearer's body, dampness generated within the diaper can be relieved out through the openings and thereby undesirable stuffiness can be avoided.

However, the known diaper is not formed with the slits in the vicinity of longitudinally opposite end portions of the diaper in the front and rear waist regions. Consequently, it is impossible for the diaper to avoid stuffiness possibly occurring in the longitudinally opposite end portions tightly placed against the wearer's skin. In

addition, the flaps extending outward from the front waist region are placed upon the respective flaps extending outward from the rear waist region and the openings may often be closed by the flaps placed one upon another in this manner. In other words, it is apprehended that the openings do not function as vent holes.

The above discussion of documents, acts, materials, devices, articles and the like is included in this specification solely for the purpose of providing a context for the present invention. It is not suggested or represented that any of these matters formed part of the prior art base or were common general knowledge in the field relevant to the present invention as it existed in Australia before the priority date of each claim of this application.

It would therefore be desirable to provide a disposable diaper improved so that the openings defined as the diaper is put on the wearer's body may be kept open and thereby stuffiness possibly occurring particularly in the vicinity of the longitudinally opposite end portions of the diaper.

According to this invention, there is provided a disposable diaper including a liquid-pervious topsheet, a liquid-impervious backsheet and a liquid-absorbent core disposed between these sheets so as to define a front waist region, a rear waist region and a crotch region extending between these waist regions, and an elastic member which is stretchable in a waist-surrounding direction being bonded

under tension to at least one of longitudinally opposite end portions of the diaper in the front and rear waist regions, wherein the elastic member associated with the waist-opening has transversely opposite ends extending in the longitudinal direction and upper and lower edges extending in the waist-surrounding direction, and a plurality of slits extending through the diaper in a thickness direction thereof and extending in the longitudinal direction are arranged to be spaced one from another by a predetermined dimension in the waist-surrounding direction between the transversely opposite ends of the elastic member associated with the waist-opening and spaced one from another by a predetermined dimension in the longitudinal direction between the vicinity of the upper edge and the vicinity of the lower edge of the elastic member associated with the waist-opening, wherein each of the slits is dimensioned in the longitudinal direction so as to be progressively reduced from the array of the slits defined in the vicinity of the upper edge to the array of the slits defined in the vicinity of the lower edge of the elastic member associated with the waist-opening.

According to one preferred embodiment of this invention, the slits are formed in the middle zone of the elastic member associated with the waist-opening as viewed in the waist-surrounding direction.

Fig. 1 is a perspective view showing an open-type diaper as partially broken away;

Fig. 2 is a plan view showing the rear waist region of the diaper;

Fig. 3 is a sectional view taken along a line A – A in Fig. 1;

Fig. 4 is a perspective view showing the pants-type diaper as put on a wearer's body and as partially broken away.

Details of a disposable diaper according to this invention will be more fully understood from the description of an open-type disposable diaper and a briefs-type disposable diaper as embodiments of this invention given hereunder with reference to the accompanying drawings.

Fig. 1 is a perspective view showing an open-type diaper as partially broken away, Fig. 2 is a plan view showing a rear

waist region of the diaper and Fig. 3 is a sectional view taken along a line A - A in Fig. 1. Referring to Fig. 1, a longitudinal direction is indicated by an arrow X and a transverse direction is indicated by an arrow Y. Fig. 2 illustrates slits 8 widened in the transverse direction to define a plurality of openings 01 ~ 04 each arranged along one end portion 1c of longitudinally opposite ends 1b of the diaper 1. Surfaces of various members such as top- and backsheets 2, 3 and leak-barrier sheets 6 facing a core 4 are referred to herein as inner surfaces thereof and surfaces of these members not facing the core 4 are referred to herein as outer surfaces thereof.

The diaper 1 basically includes the liquid-pervious topsheet 2, the liquid-impervious backsheet 3 and the liquid-absorbent core 4 disposed between these top- and backsheets 2, 3 and entirely covered with and bonded to a liquid-dispersive sheet such as tissue paper (not shown). The core 4 is, in turn, bonded to the inner surface of the topsheet 2 and/or the backsheet 3 with the liquid-dispersive sheet therebetween.

The diaper 1 is defined, in the longitudinal direction, of a front waist region 20, a rear waist region 22 and a crotch region 21 extending between the front and rear waist regions 20, 22. The diaper 1 is contoured by transversely opposite side

edge portions 1a extending in parallel to each other in the longitudinal direction so as to define circular arcs curving inward transversely of the diaper 1 and the longitudinally opposite end portions 1b, 1c extending in parallel to each other in the transverse direction.

The crotch region 21 is provided along the transversely opposite side edge portions 1a with elastic members 5 extending in the longitudinal direction and each including a plurality of elastic elements. These elastic members 5 are attached under tension to the diaper 1 so as to be associated with respective leg-openings. The transversely opposite side edge portions 1a are provided a pair of leak-barrier sheets 6 extending in the longitudinal direction.

The end portion 1c in the rear waist region 22 is provided with a ribbon-like elastic member 7 associated with a waist-opening, which is stretchable in the transverse direction and attached under tension to the end portion 1c. In the end portion 1c, a plurality of slits 8 extending through the top- and backsheets 2, 3 and the elastic member 7 associated with the waist-opening are arranged in the longitudinal direction.

The elastic member 7 associated with the waist-opening is disposed between the top- and backsheets 2, 3 and bonded to the inner surface of at least one of these sheets 2, 3. The

elastic member 7 associated with the waist-opening has transversely opposite side edges 7a extending in parallel to each other in the longitudinal direction and upper and lower edges 7b, 7c extending in parallel to each other in the transverse direction.

The slits 8 are formed in a transversely middle zone of the elastic member 7 associated with the waist-opening and arranged to be spaced one from another by a predetermined dimension between the transversely opposite side edges 7a of the elastic member 7 associated with the waist-opening. Also between the upper and lower edges 7b, 7c of the elastic member 7 associated with the waist-opening, the slits 8 are arranged to be spaced one from another by a predetermined dimension in the longitudinal direction. Each of the slits 8 is dimensioned in the longitudinal direction so that this dimension is progressively reduced from the array of the slits 8 defined in the vicinity of the upper edge 7b of the elastic member 7 associated with the waist-opening to the array of the slits 8 defined in the vicinity of the lower edge 7c of the elastic member 7 associated with the waist-opening.

Each of the leak-barrier sheets 6 has a fixed side edge portion 6a and a free side edge portion 6b both extending in the longitudinal direction and longitudinally opposite end

portions 6c collapsed inward in the transverse direction of the diaper 1 to be placed upon the topsheet 2. The leak-barrier sheet 6 further includes a laterally extended portion 6d extending outward from the fixed side edge portion 6a in the transverse direction. The fixed side edge portions 6a and the longitudinally opposite end portions 6c are bonded to the outer surface of the topsheet 2. An elastically stretchable members 9 extending in the longitudinal direction are bonded under tension to the respective free side edge portions 6b. The elastic members 9 are covered with parts of the respective free side edge portion 6b.

A tape fasteners 10 are respectively attached to the rear waist region 22 and extending inward from the transversely opposite side edge portions 1a in the transverse direction. The tape fasteners 10 have their proximal end portions 10a disposed between the backsheet 3 and the laterally extended portions 6d of the leak-barrier sheets 6 and bonded to the inner surfaces of these sheets 3, 6. The tape fasteners 10 have their free side edge portions 10b coated with pressure-sensitive adhesive 11 by means of which these free side edge portions 10b are temporarily bonded to sheets of plastic film 12 which are, in turn, bonded to the laterally extended portions 6d of the respective leak-barrier sheets 6. In the front waist region

20, a target tape strip 13 made of plastic film is attached to the outer surface of the backsheet 3. The target tape strip 13 defines a landing zone of the tape fasteners 10.

Along the transversely opposite side edge portions 1a of the diaper 1, the topsheet 2 extends outward slightly beyond the transversely opposite side edges of the core 4. The backsheet 3 and the laterally extended portions 6d of the respective leak-barrier sheets 6 extend further outward beyond the transversely opposite side edges of the topsheet 2. Along the transversely opposite side edge portions 1a of the diaper 1, the portions of the top- and backsheets 2, 3 and laterally extended portions 6d of the respective leak-barrier sheets 6 are put flat and bonded together. Each of the elastic members 5 associated with the leg-openings is disposed between the backsheet 3 and the laterally extended portion 6d of the leak-barrier sheet 6 and bonded to the inner surface of at least one of these sheets 3, 6. Along the longitudinally opposite end portions 1b and 1c of the diaper 1, the portions of the top- and backsheets 2, 3 and the leak-barrier sheets 6 extending outward in the longitudinal direction beyond longitudinally opposite ends of the core 4 are put flat and bonded together.

Referring to Fig. 1, a plurality of gathers are formed along the transversely opposite side edge portions 1a as well

as the longitudinally opposite end portions 1c of the diaper 1 and along the free side edge portions 6b of the respective leak-barrier sheets 6 as the elastic members 5, 7, 9 contract. At the same time, the diaper 1 is curved in the longitudinal direction with the topsheet 2 inside and the free side edge portions 6b of the respective leak-barrier sheets 6 are erected upward as viewed in Fig. 1 under the contractile force of the elastic members 9. As will be apparent from Fig. 2, a total area of each array of the openings 01, 02, 03, 04 defined in the end portion 1b of the rear waist region 22 is progressively reduced from the array of openings 01 defined in the vicinity of the upper edge 7b toward the array of openings 04 defined in the vicinity of the lower edge 7c of the elastic member 7 associated with the waist-opening.

An alternative arrangement is also possible in which the slits 8 arranged in the vicinity of the upper edge 7b of the elastic member 7 associated with the waist-opening extend in the longitudinal direction across this upper edge 7b so as to extend slightly beyond this edge 7b and the slits 8 arranged in the vicinity of the lower edge 7c of the elastic member 7 associated with the waist-opening extend in the longitudinal direction across this lower edge 7c so as to extend slightly beyond this edge 7c. In this case, the portions of the respective slits 8 extending beyond the

upper and lower edges 7b, 7c should extend through the top- and backsheets 2, 3.

Fig. 4 is a perspective view showing the diaper 1 with the front and rear waist regions 20, 22 connected together as put on a wearer's body, in which a waist-surrounding direction is indicated by an arrow Y. To put the diaper 1 on the wearer's body, the transversely opposite side edge portions 1a of the rear waist region 22 are overlapped upon the outer side of the front waist region 20 along its transversely opposite side edge portions 1a and then the free end portions 10b of the respective tape fasteners 10 are anchored on the target tape strip 13 by means of pressure-sensitive adhesive 11. The diaper 1 defines a waist-opening 14 and a pair of leg-openings 15 as the front and rear waist regions 20, 22 are connected together in this manner.

In referring to Fig. 4, the rear waist region 22 is pulled in the waist-surrounding direction so that the transversely opposite side edges 1a thereof are spaced apart from each other. The elastic member 7 associated with the waist-opening is correspondingly stretched in the waist-surrounding direction and the slits 8 are widened so define a plurality of openings 01 ~ 04 which are longitudinally larger. The end portion 1c of the diaper 1 in the rear waist region 22 is tightly held against the wearer's skin under the contractile force of the elastic member 7

associated with the waist-opening and the diaper 1 would be liable to undesirable stuffiness. However, the diaper 1 is provided along the longitudinal opposite end portions 1c with a plurality of openings 01 ~ 04 extending through the top- and backsheets 2, 3 as well as the elastic member 7 associated with the waist-opening. Dampness generated within the diaper 1 can be relieved out through these openings defined in the vicinity of the end portion 1c and thereby stuffiness possibly occurring in this end portion 1c can be effectively avoided.

The total area of the arrays of openings 03, 04 defined in the vicinity of the lower edge 7c is smaller than the total area of the arrays of openings 01, 02 defined in the vicinity of the upper edge 7b of the elastic member 7 associated with the waist-opening. Such arrangement minimizes an anxiety that excretion discharged on the diaper 1 might leak through the arrays of openings 03, 04 defined in the vicinity of the lower edge 7c and prevents an amount of the excretion permeating the end portion 1c of the diaper 1 from leaking out from the diaper 1 through the openings 03, 04. The elastic member 7 associated with the waist-opening contracts again and the openings 01 ~ 04 are closed again as the tape fasteners 11 are disengaged from

the target tape strip 13.

Fig. 5 is a perspective view showing a pants-type diaper 30 as put on a wearer's body and as partially broken away, in which a waist-surrounding direction is indicated by an arrow Y and a thigh-surrounding direction is indicated by an arrow Z. In referring to Fig. 5, the slits 8 are widened in the waist-surrounding direction and a plurality of openings O1 ~ O4 are defined along front and rear peripheral edges 30b, 30c of the waist-opening 35. Similarly to the diaper 1 of Fig. 1, the diaper 30 basically includes the liquid-pervious topsheet 2, the liquid-impervious backsheet 3 and the liquid-absorbent core 4 disposed between these sheets 2, 3 and entirely covered with and bonded to tissue paper (not shown).

The diaper 30 is basically composed of front and rear waist regions 31, 33 opposed to each other and a crotch region 32 extending between the front and rear waist regions 31, 33 so that the front and rear waist regions 31, 33 have their transversely opposite side edge portions 30a put flat and bonded together to define a waist-opening 35 and a pair of leg-openings 36.

Elastic members 34 each including a plurality of elastic elements and being stretchable in the thigh-surrounding direction are bonded under tension to respective peripheral

edge portions of the respective leg-openings 36. These elastic members 34 associated with the leg-openings 36 are disposed between the top- and backsheets 2, 3 and bonded to the inner surface of at least one of these sheets 2, 3.

The front and rear peripheral edge portions 30b, 30c of the waist-opening 35 are respectively provided with a pair of ribbon-like elastic members 7 being stretchable in the waist-surrounding direction and bonded under tension thereof so as to be associated with the waist-opening 35. In the respective peripheral edge portions 30b, 30c, a plurality of slits 8 extend in the longitudinal direction and, in the thickness direction of the diaper 30, these slits 8 extend through the top- and backsheets 2, 3 as well as the elastic members 7 associated with the waist-opening.

The elastic members 7 associated with the waist-opening are disposed between the top- and backsheets 2, 3 and bonded to the inner surface of at least one of these sheets 2, 3. Each of the elastic member 7 associated with the waist-opening has transversely opposite side edges 7a extending in parallel to each other in the longitudinal direction and upper and lower edges 7b, 7c extending in parallel to each other in the transverse direction.

The slits 8 are formed in transversely middle zones of

the respective elastic members 7 associated with the waist-opening and arranged to be spaced one from another by a predetermined dimension between the transversely opposite side edges 7a of respective the elastic members 7 associated with the waist-opening. Also between the upper and lower edges 7b, 7c of the respective elastic members 7 associated with the waist-opening, the slits 8 are arranged to be spaced one from another by a predetermined dimension in the longitudinal direction. Each of the slits 8 is dimensioned in the longitudinal direction so that this dimension is progressively reduced from the array of the slits 8 defined in the vicinity of the upper edges 7b to the array of the slits 8 defined in the vicinity of the lower edges 7c of the respective elastic member 7 associated with the waist-opening.

The respective elastic members 7 associated with the waist-opening are stretched in the waist-surrounding direction as the diaper 30 is put on the wearer's body, and thereupon the slits 8 are widened to define a plurality of openings O1 ~ O4 each being longitudinally larger. The plurality of openings O1 ~ O4 defined in the front and rear peripheral edge portions 30b, 30c and extending through the top- and backsheets 2, 3 as well as the elastic members 7 associated with the waist-opening advantageously allow dampness generated within the diaper 30

and eliminate an anxiety that undesirable stuffiness might occur in the vicinity of the front and rear peripheral edge portions 30b, 30c.

The total area of the arrays of openings O3, O4 defined in the vicinity of the lower edges 7c is smaller than the total area of the arrays of openings O1, O2 defined in the vicinity of the upper edges 7b of the respective elastic members 7 associated with the waist-opening. Such unique arrangement eliminates an anxiety that excretion discharged on the diaper 30 might leak out through the arrays of openings O3, O4 defined in the vicinity of the respective lower edges 7c.

The topsheet 2 may be formed with a liquid-pervious sheet such as a nonwoven fabric or porous plastic film, preferably by a liquid-pervious hydrophilic sheet. The backsheet 3 may be formed with a hydrophobic nonwoven fabric, liquid-impervious plastic film or a laminated sheet of hydrophobic nonwoven fabric and plastic film, preferably with a breathable but liquid-impervious sheet. It is also possible to form the backsheet 3 using a composite nonwoven fabric consisting of a melt blown nonwoven fabric having a high water-resistance and two layers of a spun bond nonwoven fabric having high strength and flexibility sandwiching the melt blown nonwoven fabric.

The nonwoven fabric may be selected from a group including

spun lace-, needle punch-, melt blown-, thermal bond-, spun bond-, chemical bond- and air through-nonwoven fabrics. Component fiber of the nonwoven fabric may be selected from a group including polyolefine-, polyester- and polyamide-based fibers and polyethylene/polypropylene or polyethylene/polyester core-sheath type conjugated fiber and side-by-side-type conjugated fiber.

Each of the elastic members 7 associated with the waist-opening may be formed with foamed materials such as soft urethane foam, synthetic rubber foam of styrene foam, or non-foamed elastomer film of natural or synthetic rubber.

The core 4 is a mixture of fluff pulp, high absorption polymer particles and thermoplastic synthetic resin fiber compressed to a desired thickness. The high absorption polymer may be selected from a group including graft polymer of starch, denaturated cellulose, crosslinked water-soluble polymer and alkali metal acrylate of self-crosslinkage type.

Bonding of the top- and backsheets to each other, bonding the core 4 to the top- and backsheets 2, 3 as well as attaching of the elastic member 5, 7, 9, 34 and tape fasteners 10 may be carried out using suitable adhesive such as a hot melt adhesive agent or a technique of welding such as a sonic sealing or a heat-sealing.

The disposable diaper according to this invention has a unique arrangement of plural slits extending through the thickness direction of the diaper and extending in the longitudinal direction. These slits are arranged between the longitudinally opposite ends and between the upper and lower edges of the elastic member associated with the waist-opening so that the slits are widened in the waist-surrounding direction and a plurality of openings are defined in the vicinity of at least one of the longitudinally opposite end portions of the diaper as the diaper is put on the wearer's body. Such arrangement ensures that dampness generated within the diaper can be relieved out through the openings and stuffiness possibly occurring in the longitudinally opposite end portions of the diaper can be reliably avoided even if the end portions of the diaper are tightly placed against the wearer's body under a contractile force of the elastic member associated with the waist-opening.

With the diaper according to this invention implemented as the open-type diaper formed in the middle zone of the elastic member associated with the waist-opening as viewed in the waist-surrounding direction, it is not apprehended that the openings might be closed by the transversely opposite side edge portions of the front and rear waist regions placed one upon

another as the diaper of prior art has been the case.

With the diaper having the slits dimensioned in the longitudinal direction so as to be progressively reduced from the upper edge toward the lower edge of the elastic member associated with the waist-opening, the area of each slit is also progressively reduced from the upper edge toward the lower edge of the elastic member associated with the waist-opening. Consequently, it is not apprehended that excretion discharged on the diaper and permeating the longitudinally opposite end portions of the diaper might leak out from the diaper through the openings.

WHAT IS CLAIMED IS:

THE CLAIMS DEFINING THE INVENTION ARE AS FOLLOWS:

1. A disposable diaper including a liquid-pervious topsheet, a liquid-impervious backsheet and a liquid-absorbent core disposed therebetweeen so as to define a front waist region, a rear waist region and a crotch region extending between said waist regions, and an elastic member which is stretchable in a waist-surrounding direction being bonded under tension to at least one of longitudinally opposite end portions of the diaper in said front and rear waist regions, wherein:

said elastic member associated with the waist-opening has transversely opposite ends extending in a longitudinal direction thereof and upper and lower edges extending in said waist-surrounding direction; and

a plurality of slits extending through said diaper in a thickness direction thereof and extending in said longitudinal direction are arranged to be spaced one from another by a predetermined dimension in said waist-surrounding direction between said transversely opposite ends of said elastic member associated with the waist-opening and spaced one from another by a predetermined dimension in said longitudinal direction between a vicinity of said upper edge and a vicinity of said lower edge of said elastic member associated with the

waist–opening, wherein each of said slits is dimensioned in said longitudinal direction so as to be progressively reduced from the array of the slits defined in the vicinity of said upper edge to the array of the slits defined in the vicinity of said lower edge of said elastic member associated with the waist-opening.

2. The diaper according to Claim 1, wherein said slits are formed in the middle zone of said elastic member associated with the waist–opening as viewed in said waist–surrounding direction.

3. A disposable diaper substantially as herein before described with reference to the embodiment illustrated in the accompanying drawings.

DATED: 22 July 2005

PHILLIPS ORNONDE & FITZPATRICK

Patent Attorneys for:

UNI-CHARM CORPORATION

David B Fitzpatrick

W:\sharon\adrian\Speci\AC 55921-01.doc

2000-297574

FIG.1

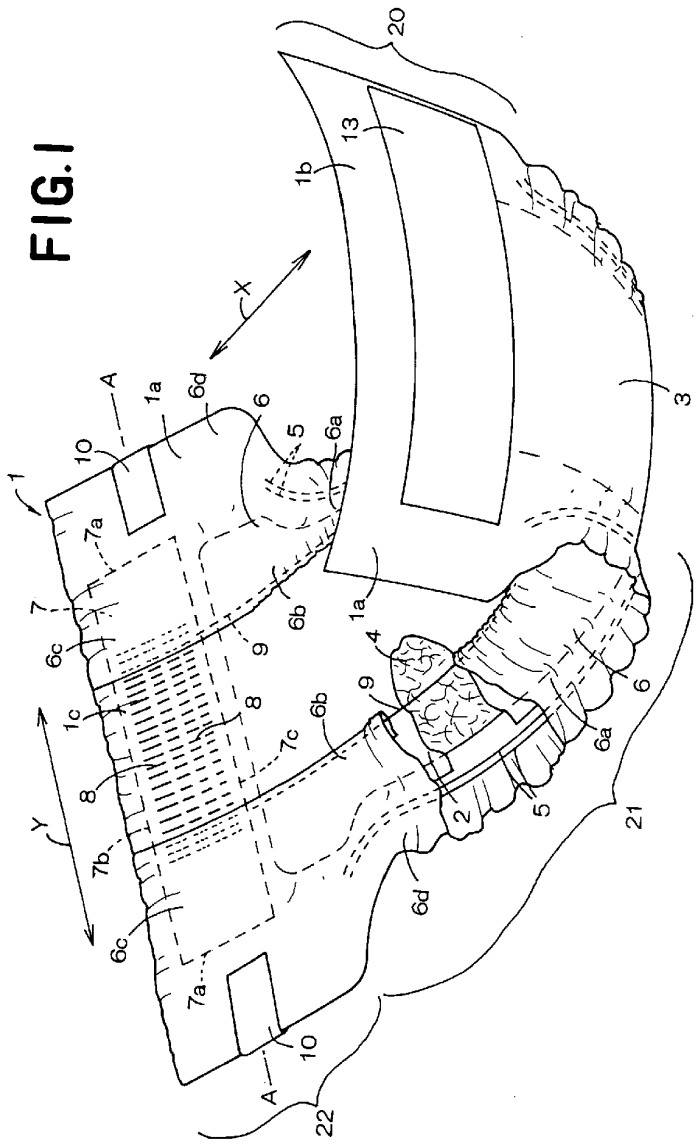

COPY

FIG.2

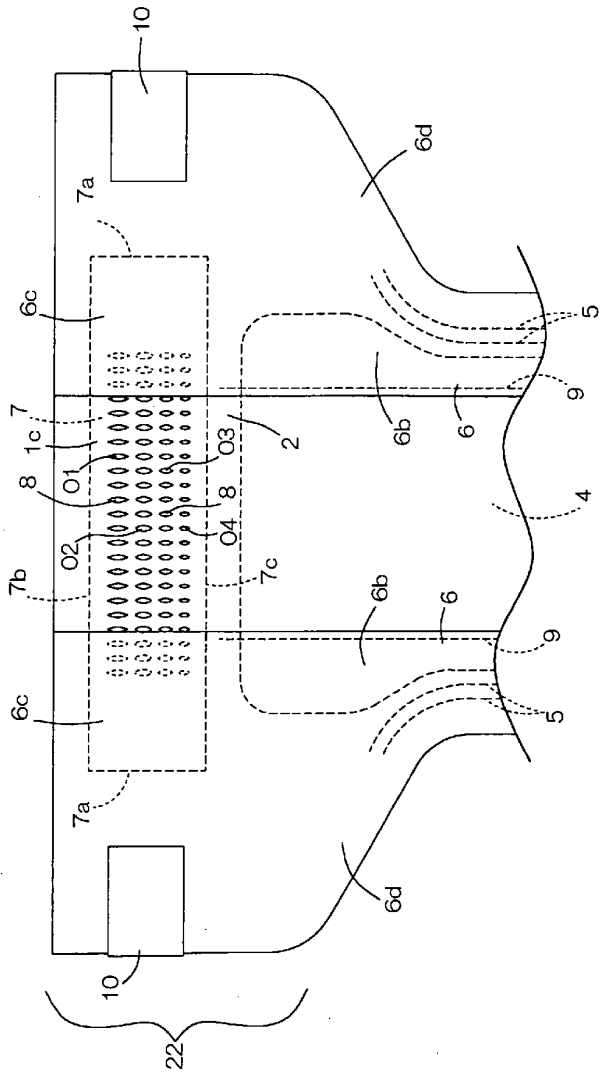

FIG.3

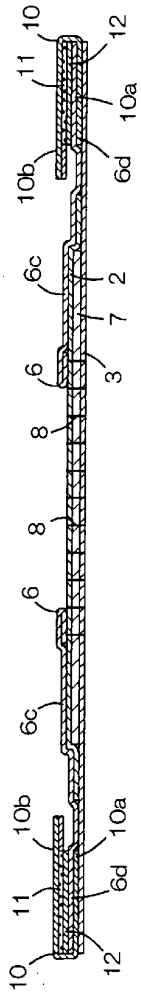

2000-297574

FIG.4

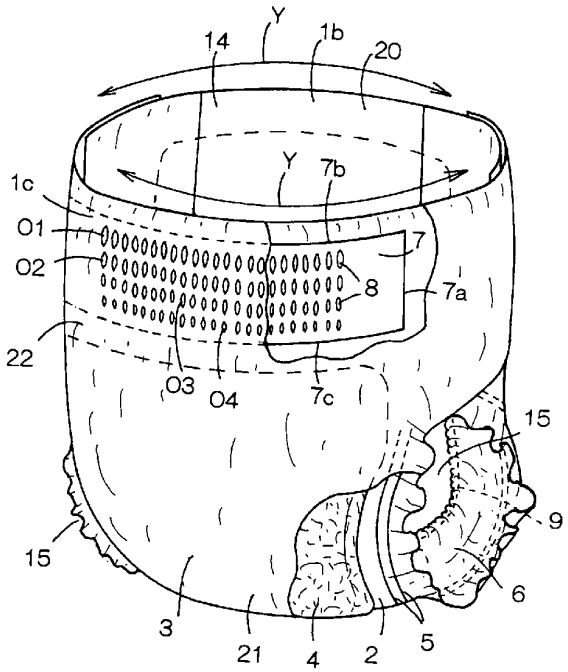

FIG.5

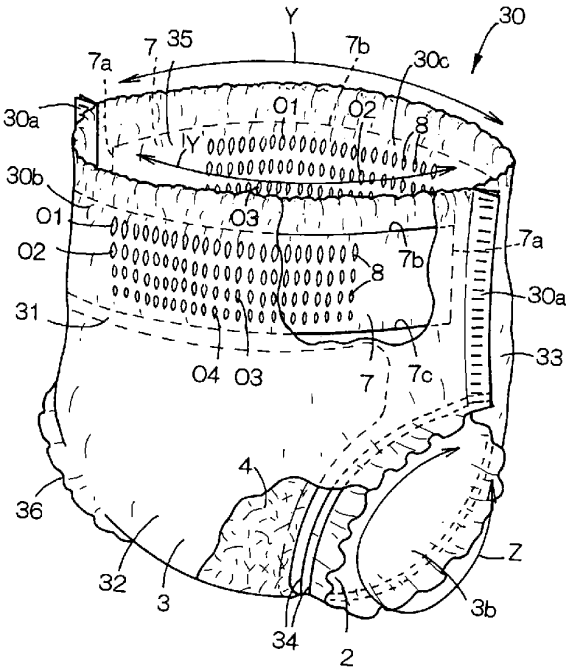
Y
30
7a
7
35
7b
30c
30a
O1
O2
8
Y
30b
O1
O3
7a
O2
7b
8
30a
31
33
O4
O3
7
7c
4
36
Z
32
3
3b
34
2