US 20130067639A1

(19) United States

(12) Patent Application Publication

Dua et al.

(10) Pub. No.: US 2013/0067639 A1

(43) Pub. Date: Mar. 21, 2013

(54) **THERMOPLASTIC NON-WOVEN TEXTILE ELEMENTS**

(75) Inventors: **Bhupesh Dua**, Portland, OR (US); **Karen A. Hawkinson**, Portland, OR (US)

(73) Assignee: **NIKE, INC.**, Beaverton, OR (US)

(21) Appl. No.: **13/426,290**

(22) Filed: **Mar. 21, 2012**

Related U.S. Application Data

(62) Division of application No. 12/367,274, filed on Feb. 6, 2009.

Publication Classification

(51) **Int. Cl.**

D04H 13/00	(2006.01)
A41D 1/06	(2006.01)
A43B 1/00	(2006.01)
A41B 1/08	(2006.01)

(52) **U.S. Cl.**

CPC ***D04H 13/00*** (2013.01); ***A41B 1/08*** (2013.01); ***A41D 1/06*** (2013.01); ***A43B 1/00*** (2013.01)

USPC **2/227**; 428/196; 428/57; 2/69; 36/83

(57) **ABSTRACT**

A non-woven textile may be formed from a plurality of thermoplastic polymer filaments. The non-woven textile may have a first region and a second region, with the filaments of the first region being fused to a greater degree than the filaments of the second region. A variety of products, including apparel (e.g., shirts, pants, footwear), may incorporate the non-woven textile. In some of these products, the non-woven textile may be joined with another textile element to form a seam. More particularly, an edge area of the non-woven textile may be heatbonded with an edge area of the other textile element at the seam. In other products, the non-woven textile may be joined with another component, whether a textile or a non-textile.

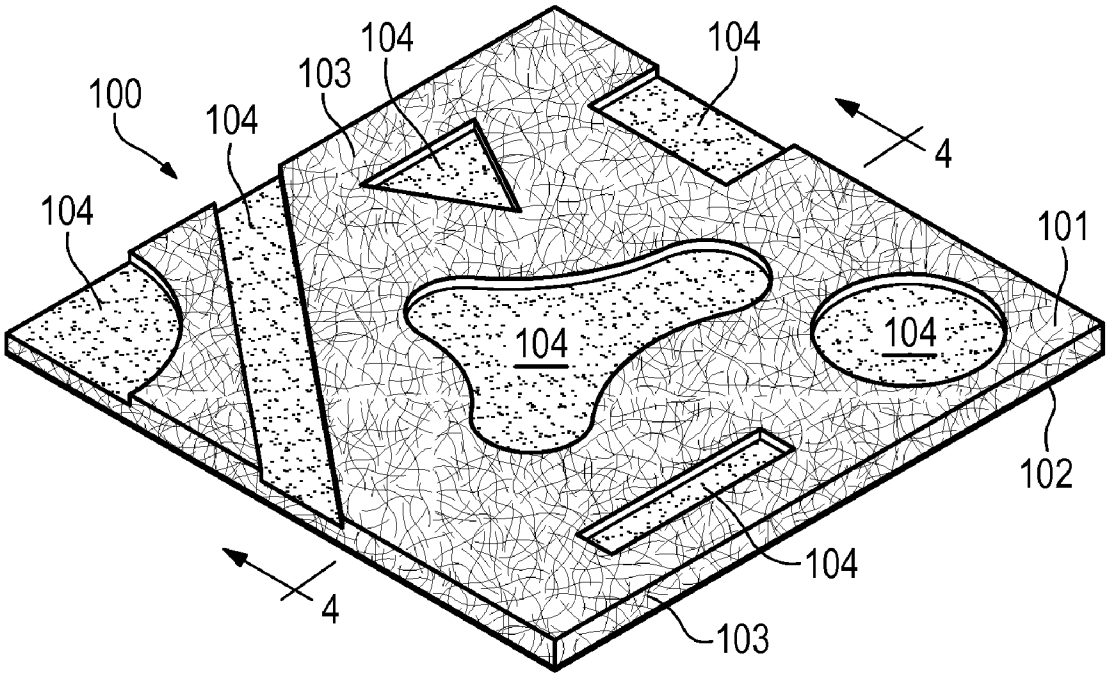

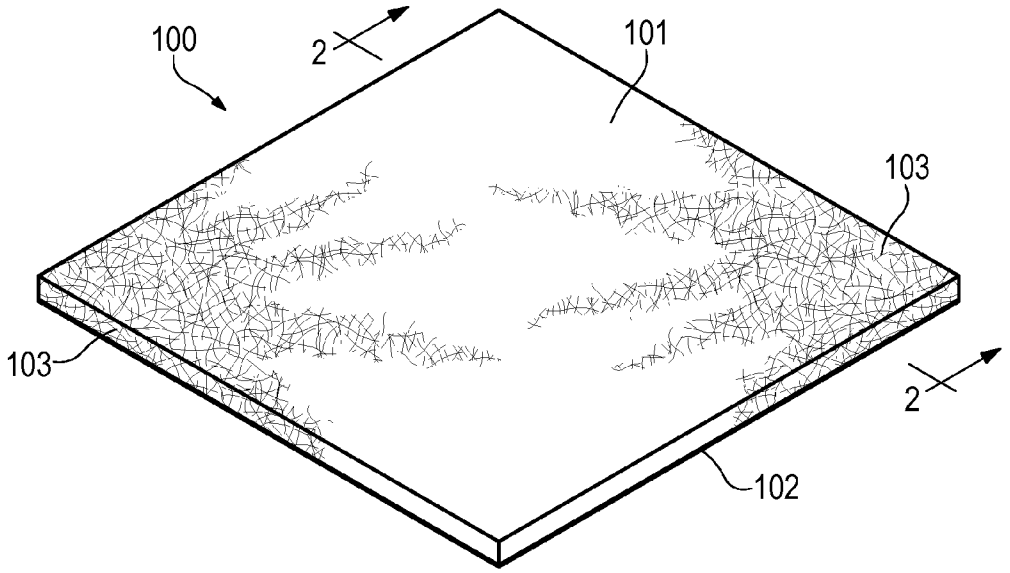

Figure 1

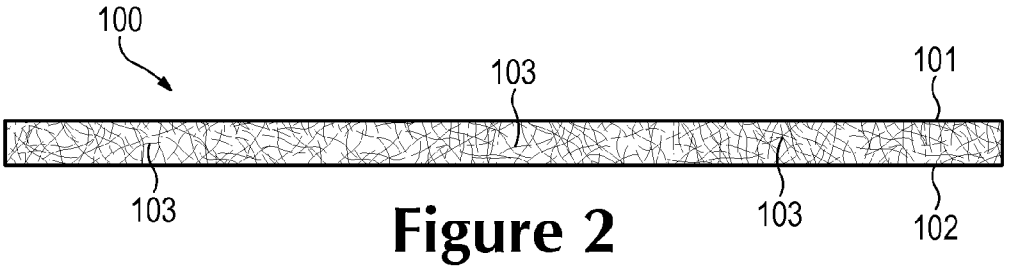

Figure 2

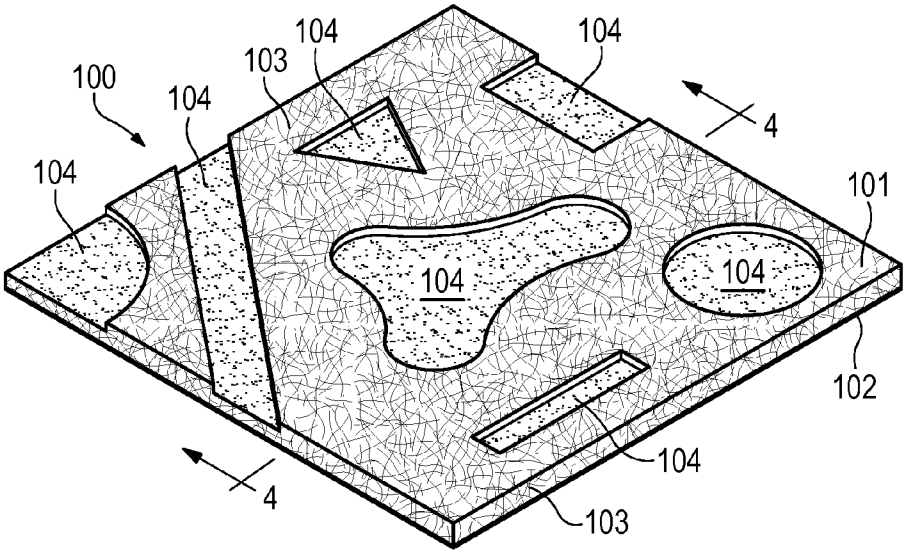

Figure 3

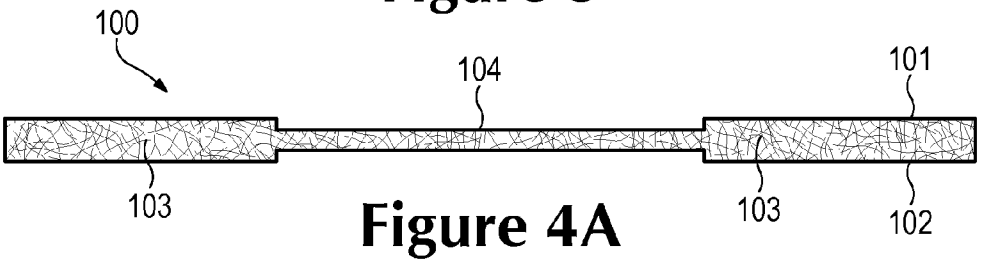

Figure 4A

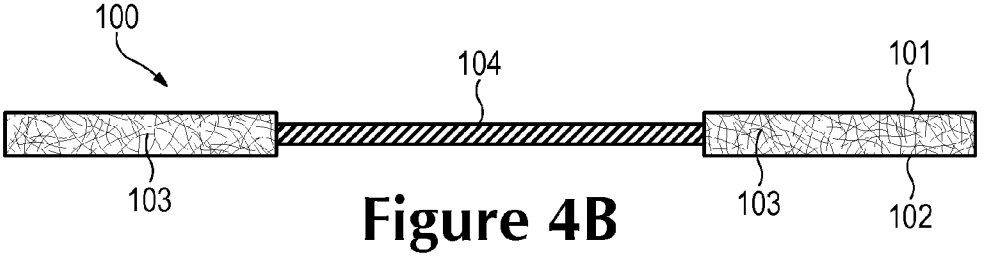

Figure 4B

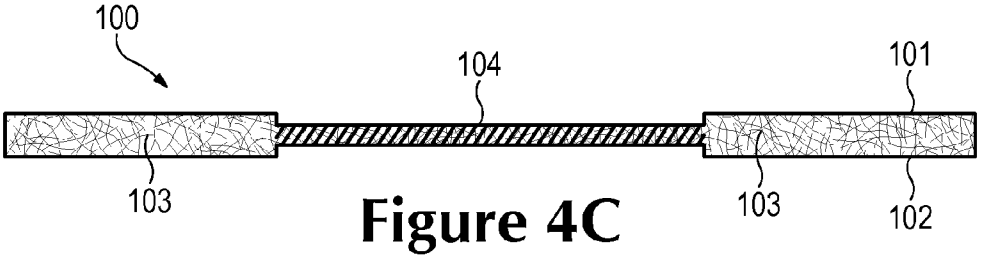

Figure 4C

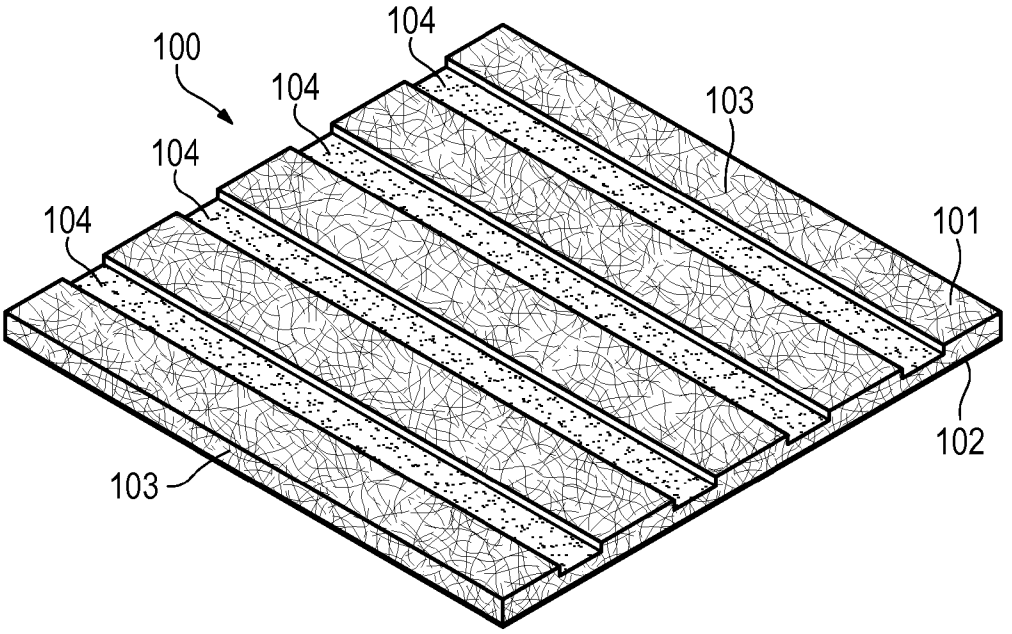

Figure 5A

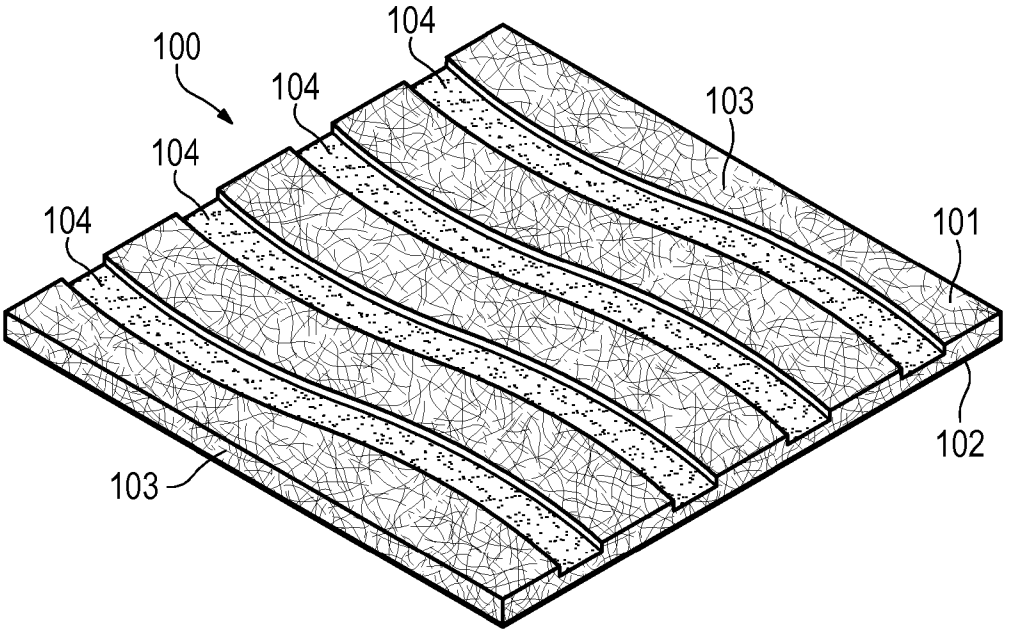

Figure 5B

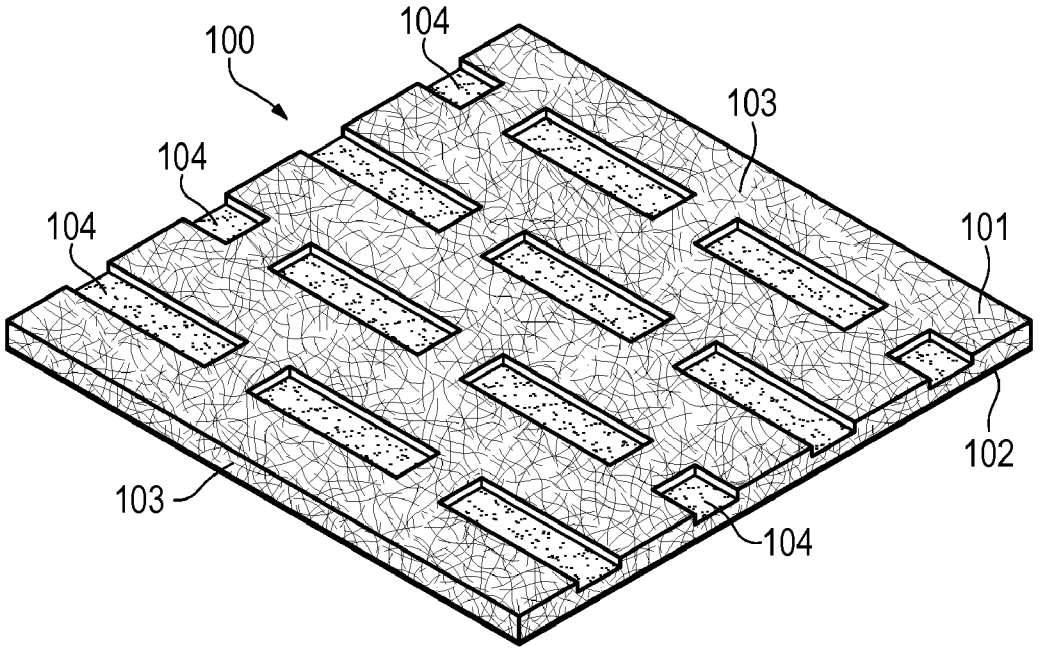

Figure 5C

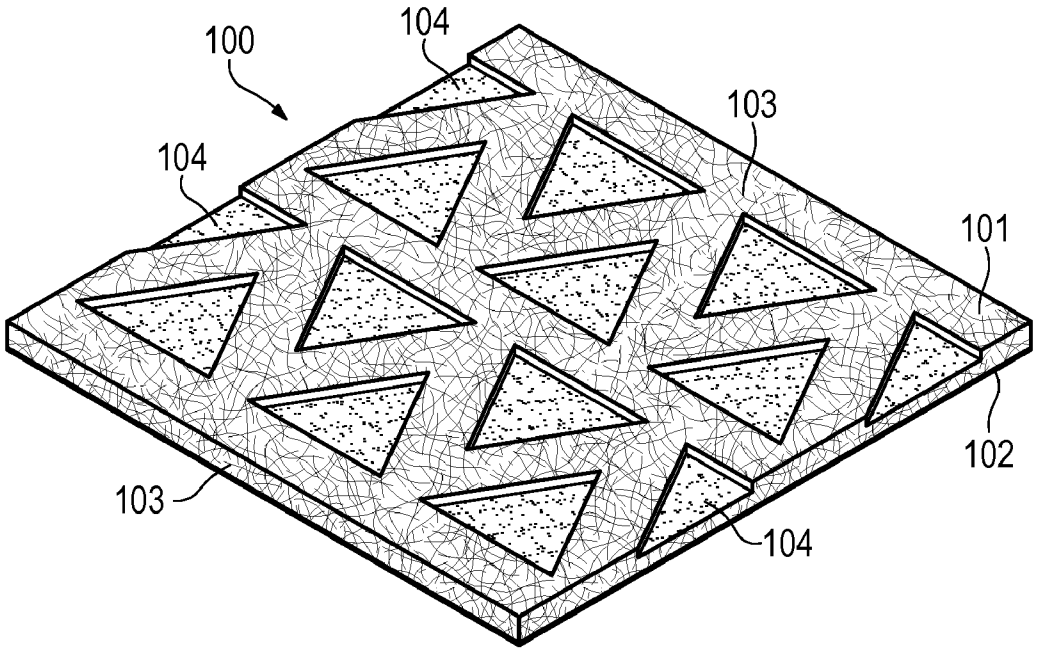

Figure 5D

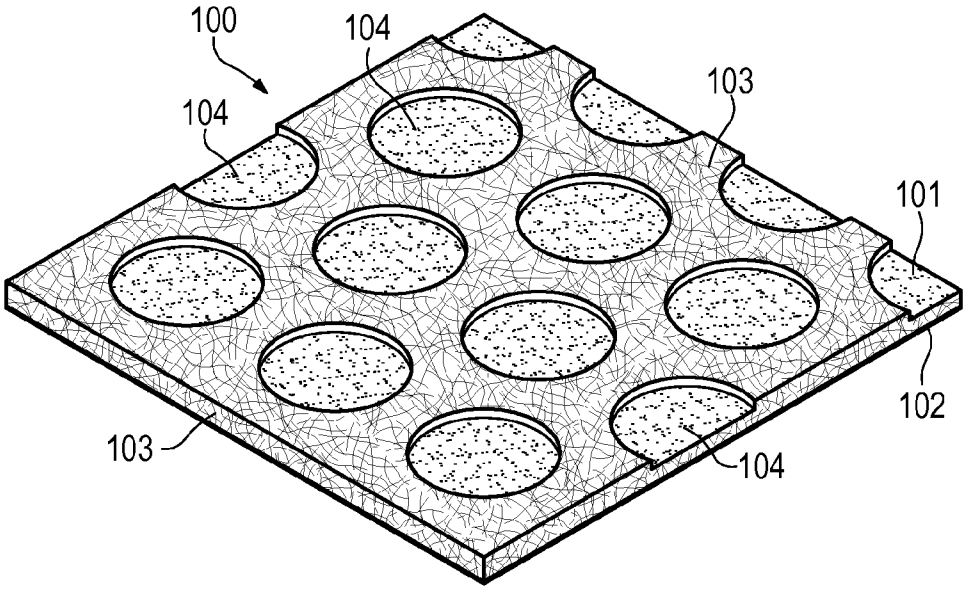

Figure 5E

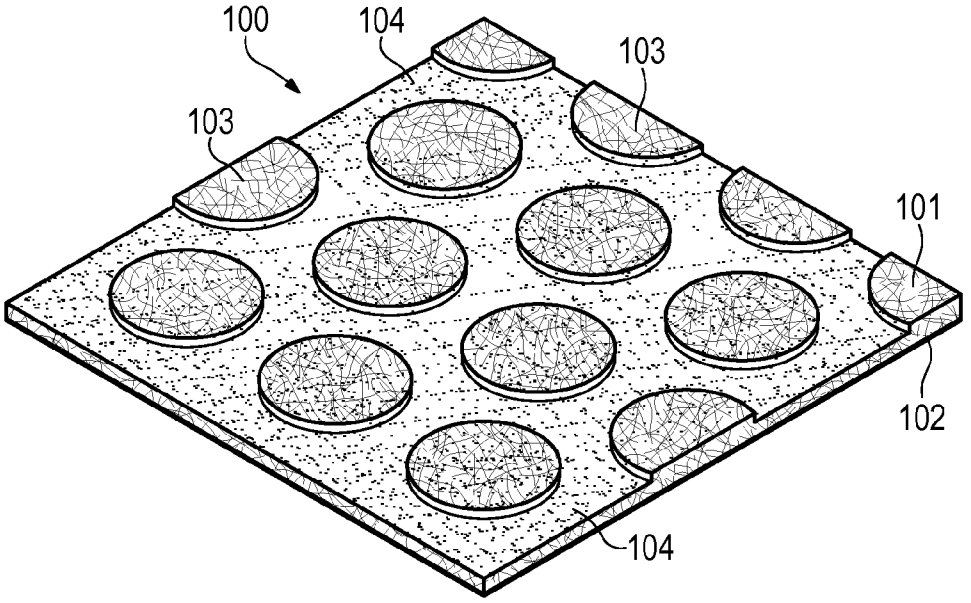

Figure 5F

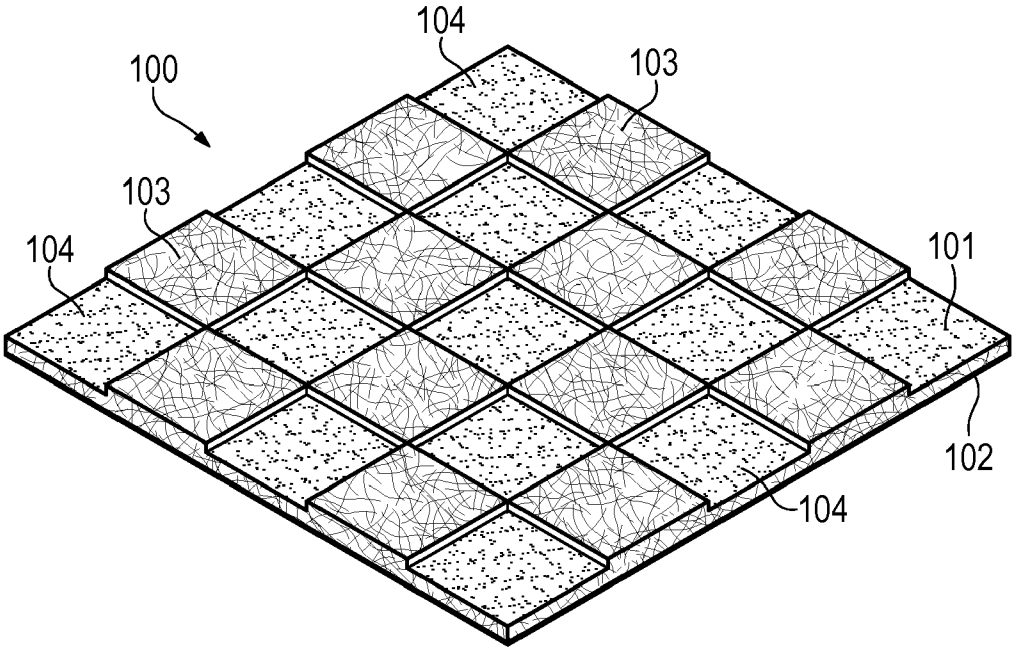

Figure 5G

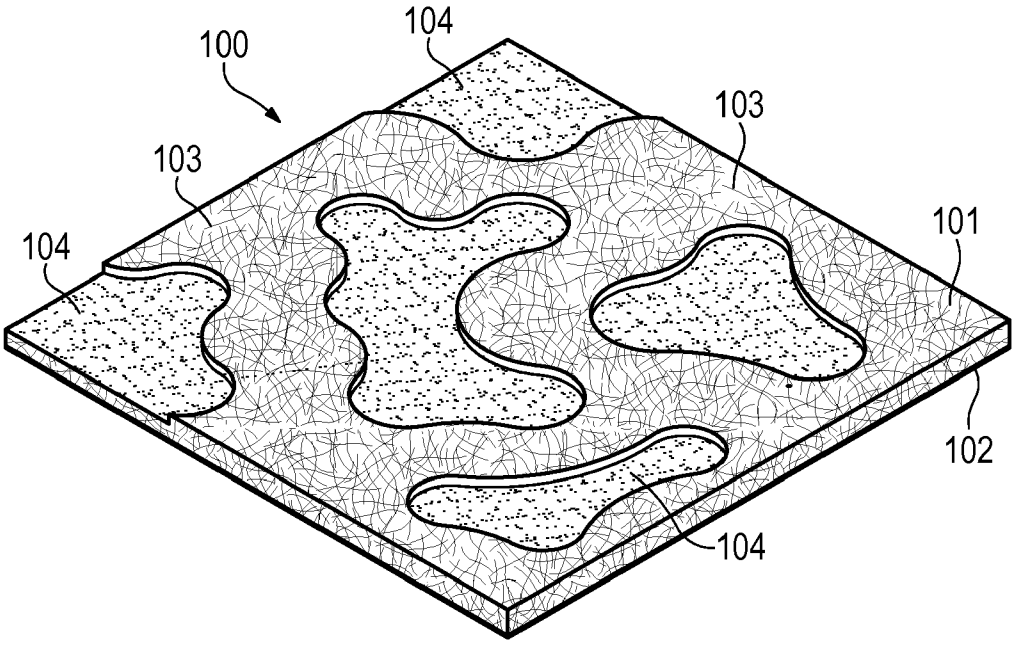

Figure 5H

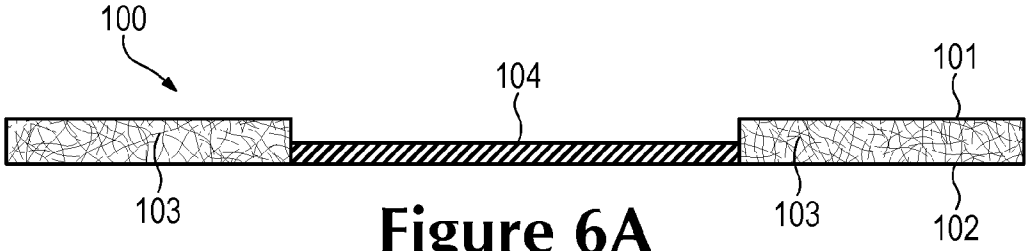

Figure 6A

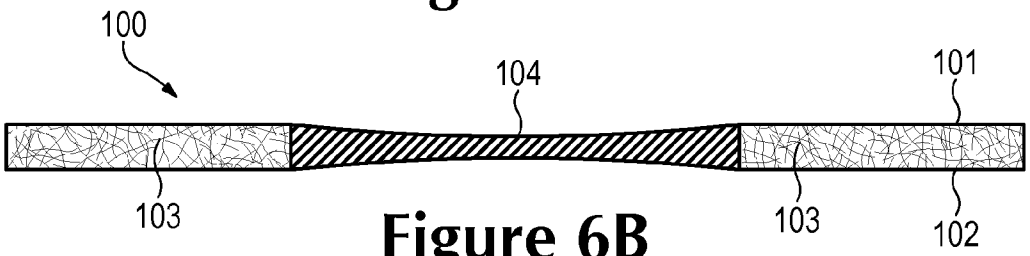

Figure 6B

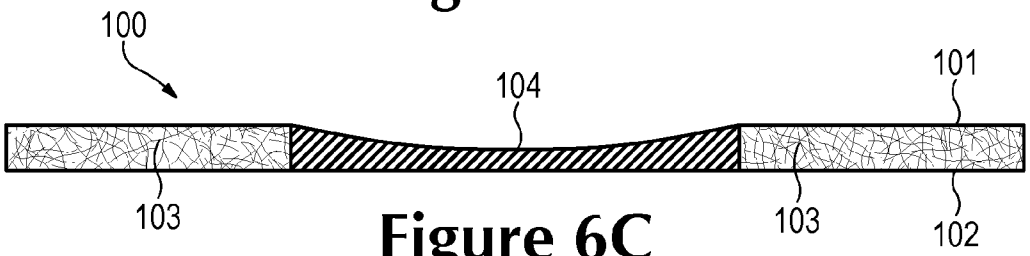

Figure 6C

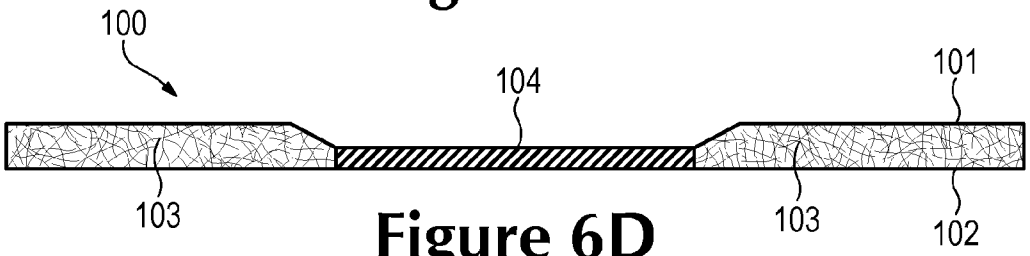

Figure 6D

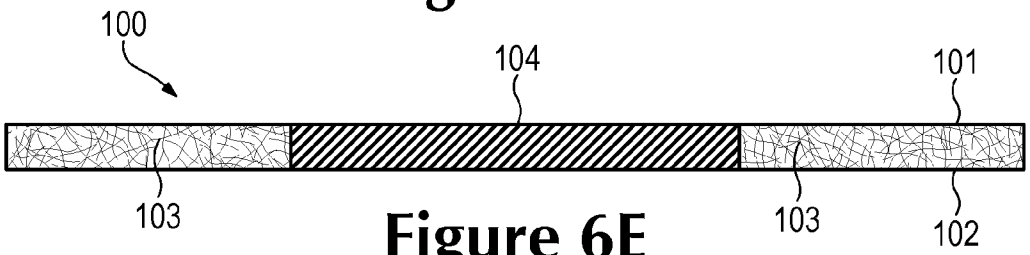

Figure 6E

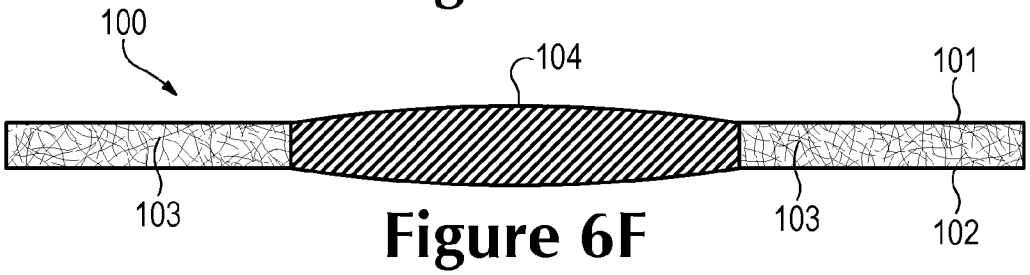

Figure 6F

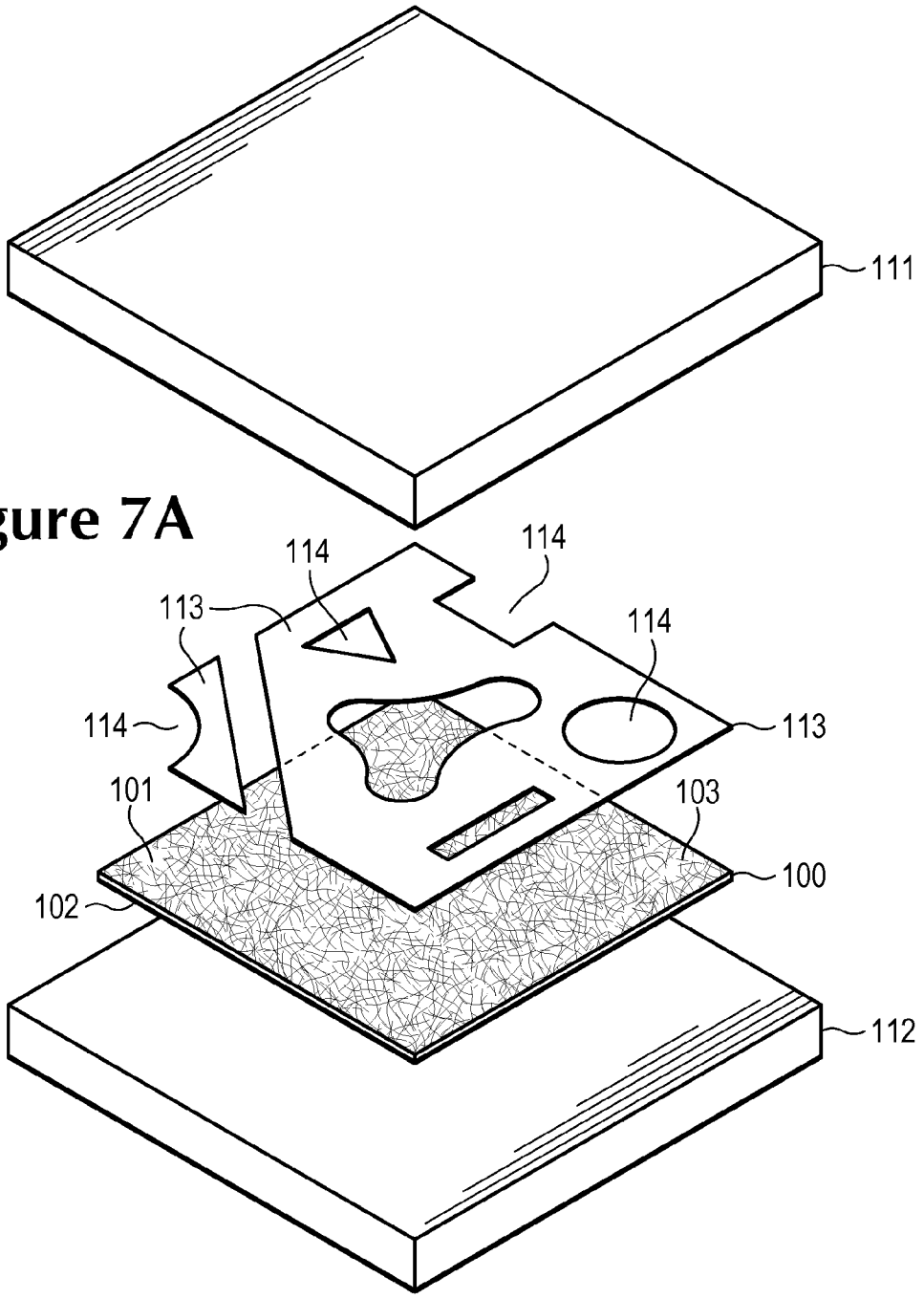

Figure 7A

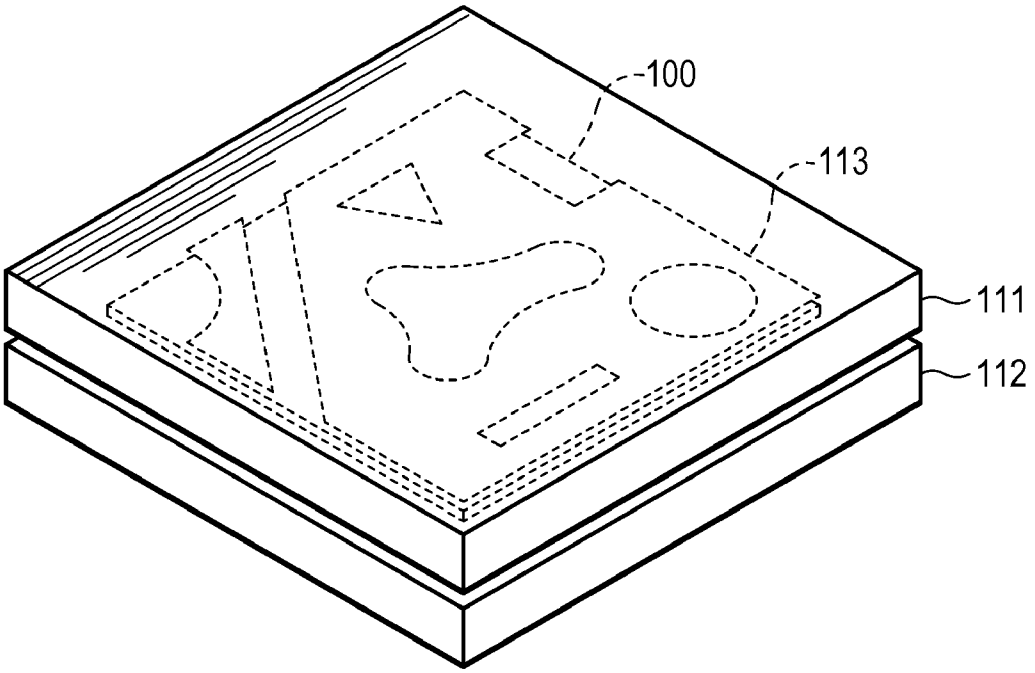

Figure 7B

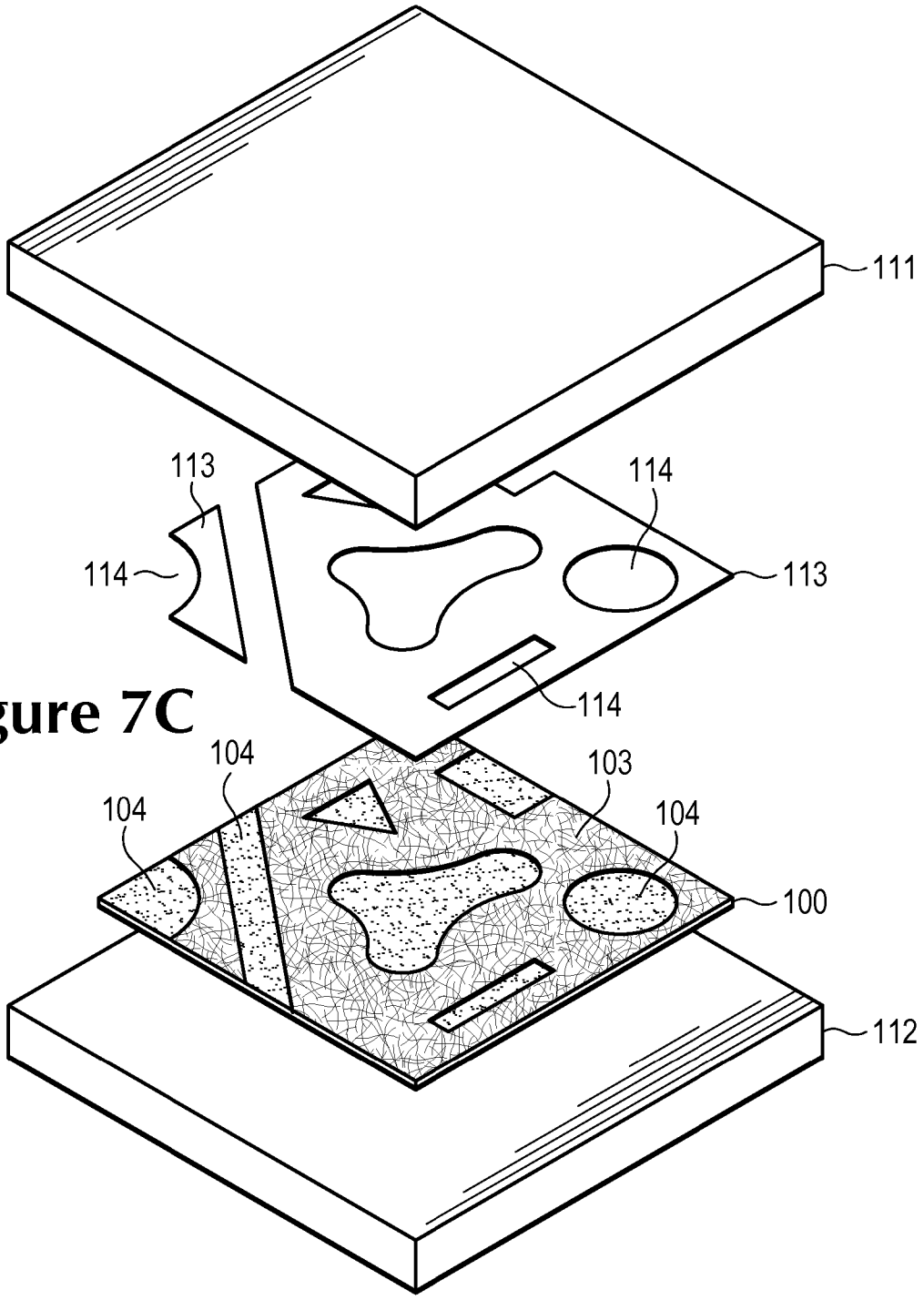

Figure 7C

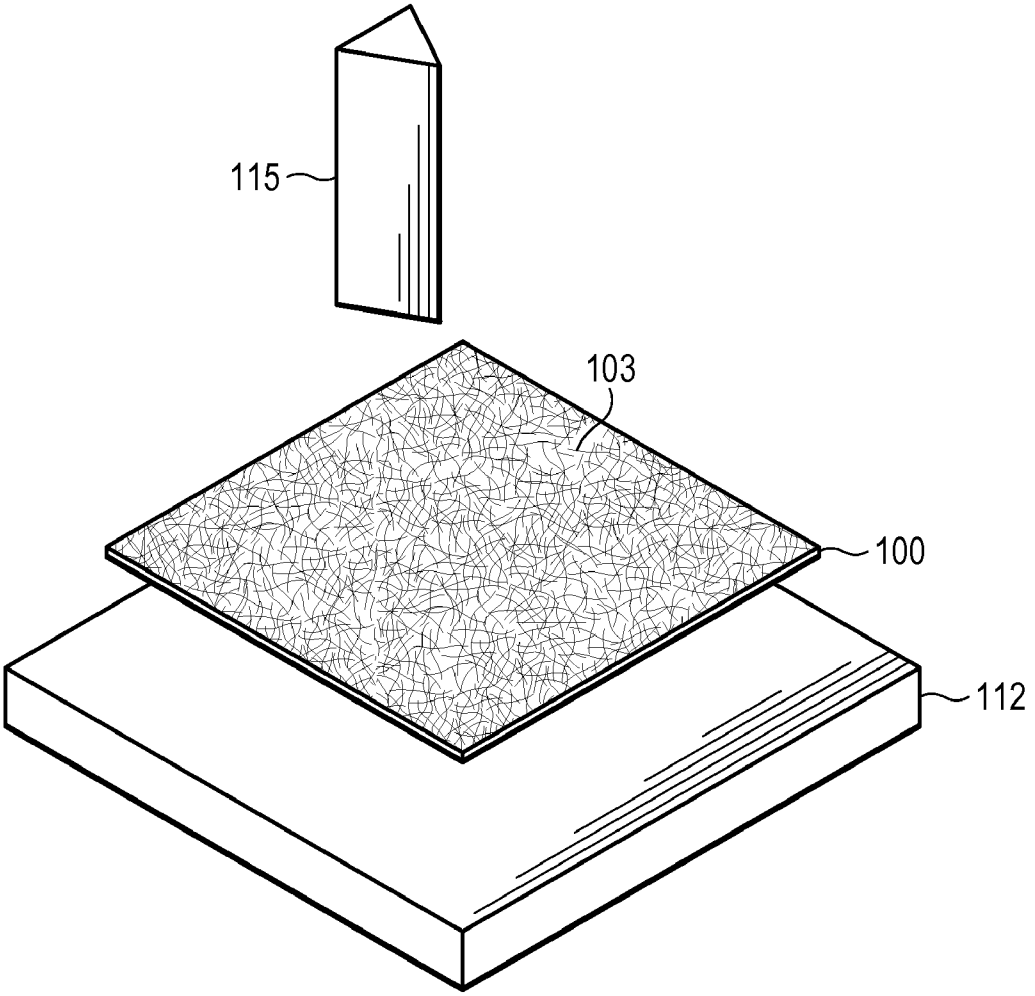

Figure 8A

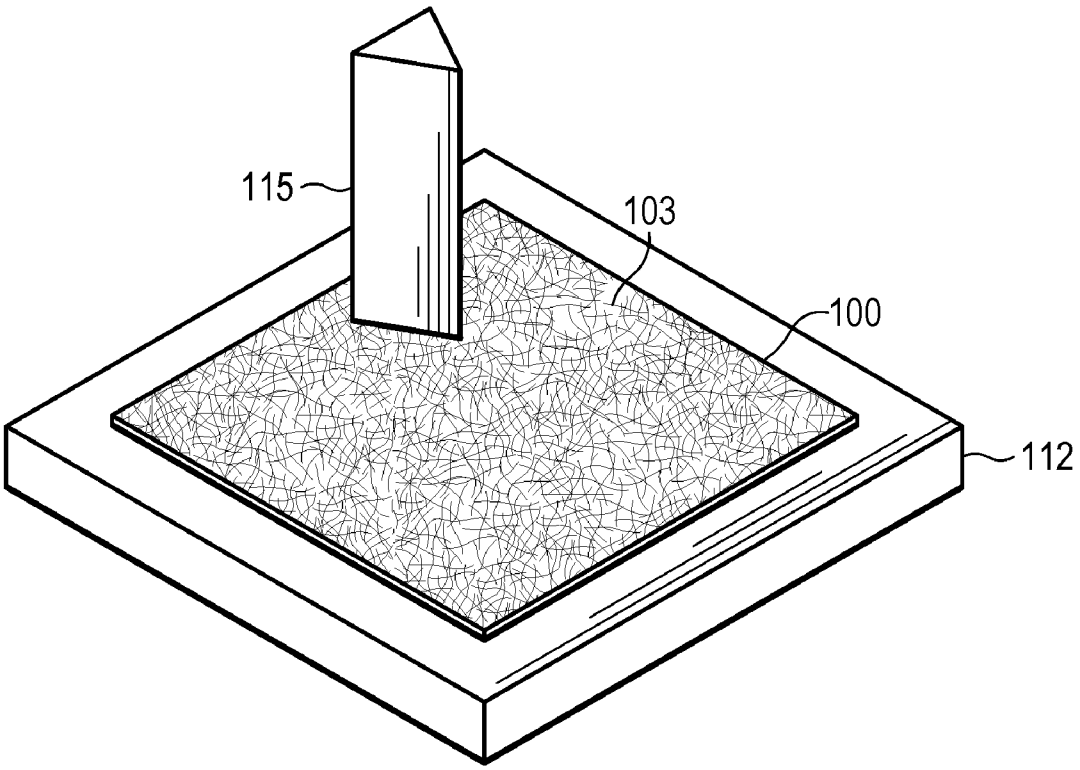

Figure 8B

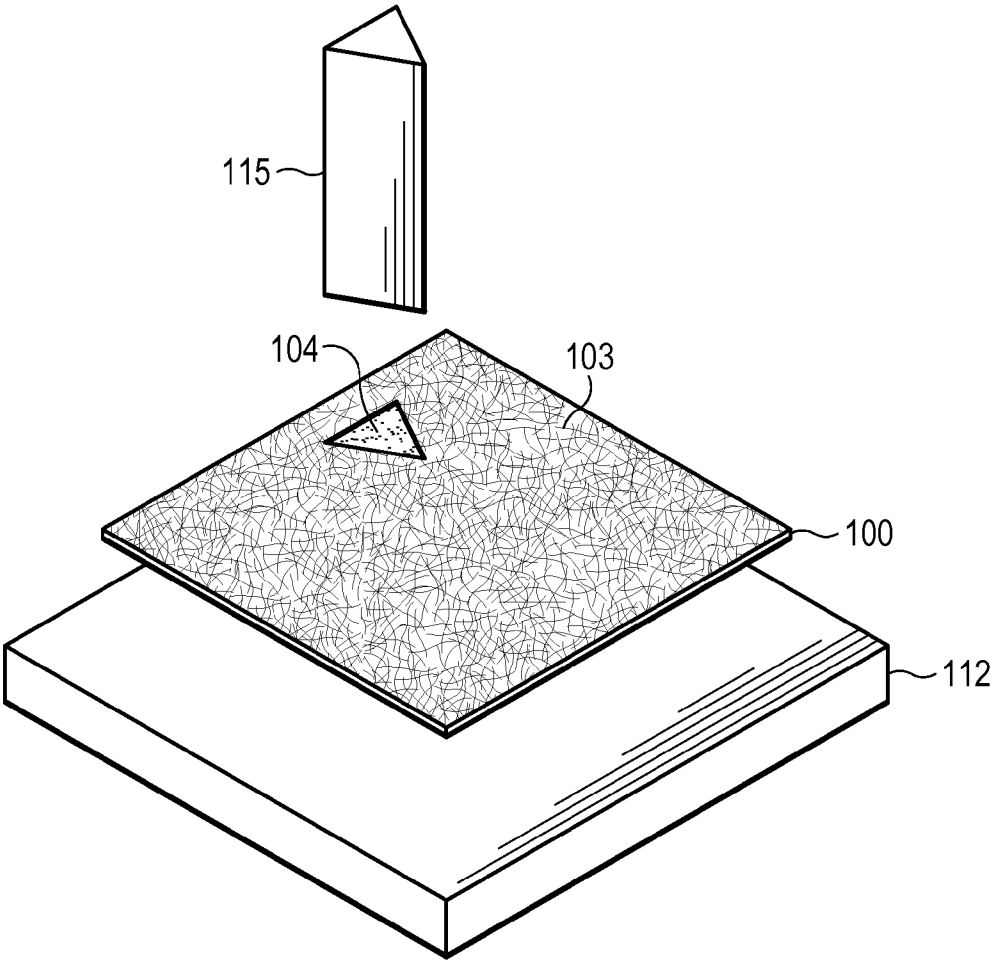

Figure 8C

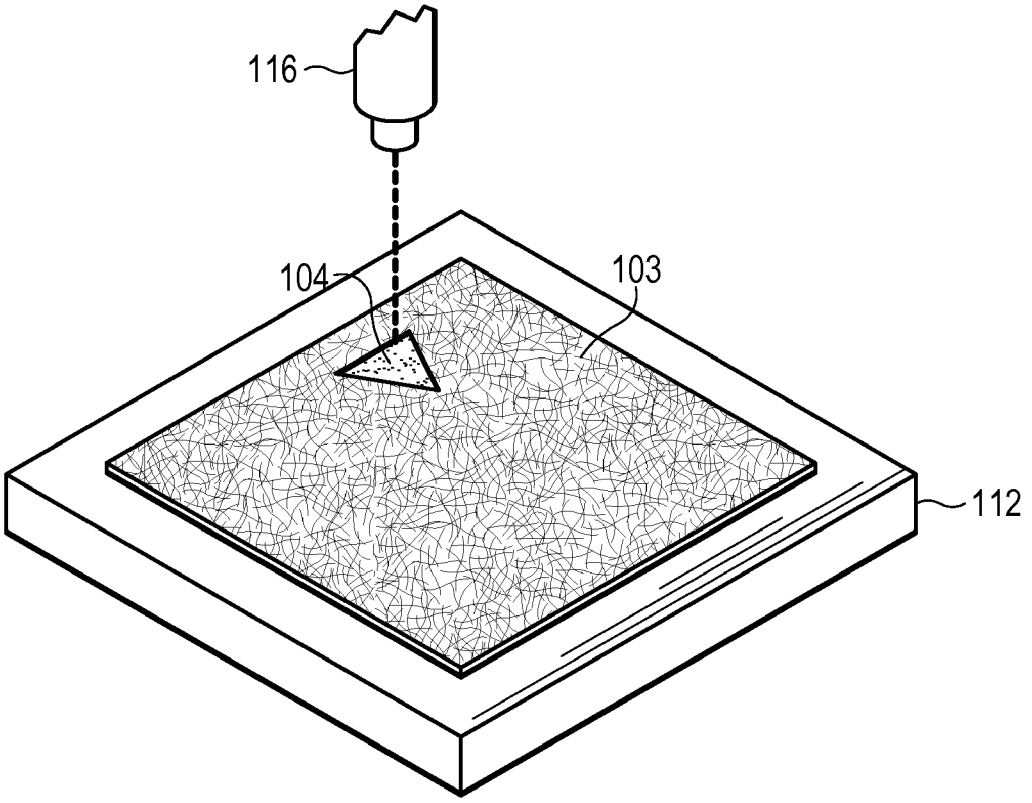

Figure 9

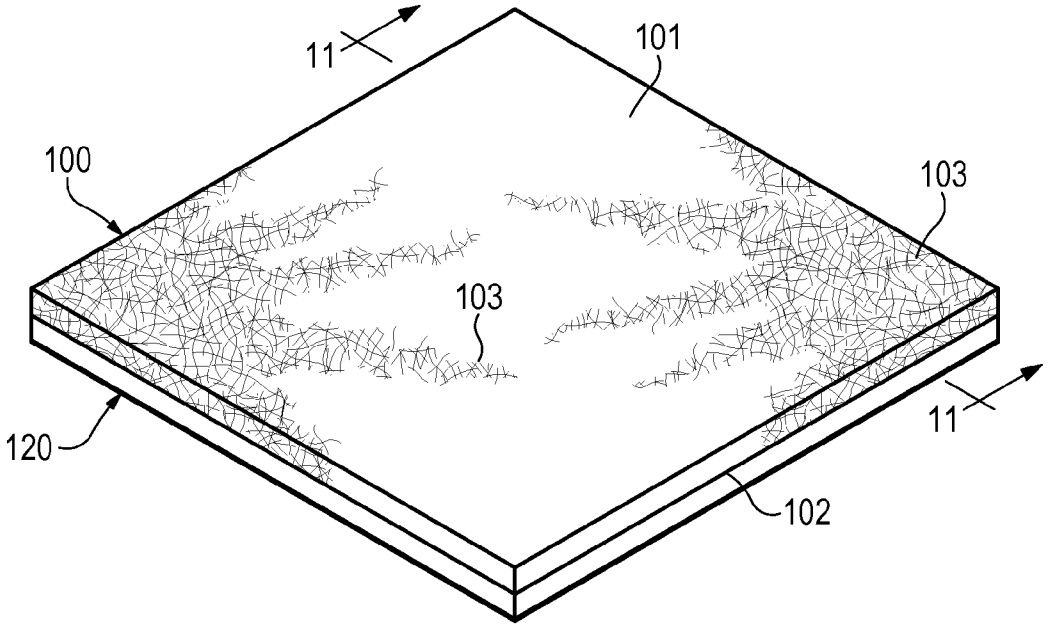

Figure 10

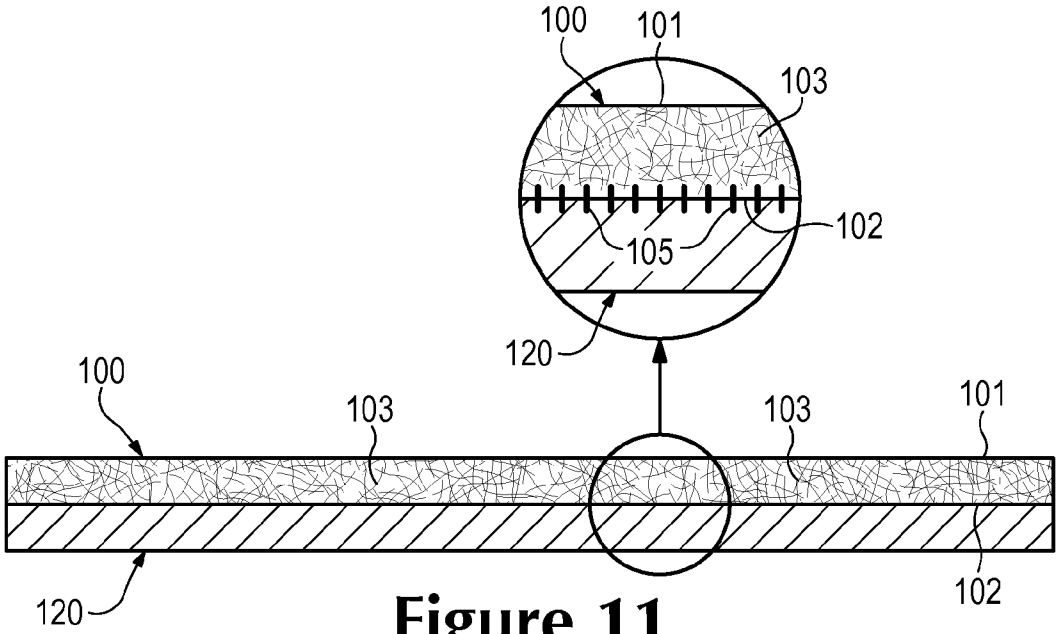

Figure 11

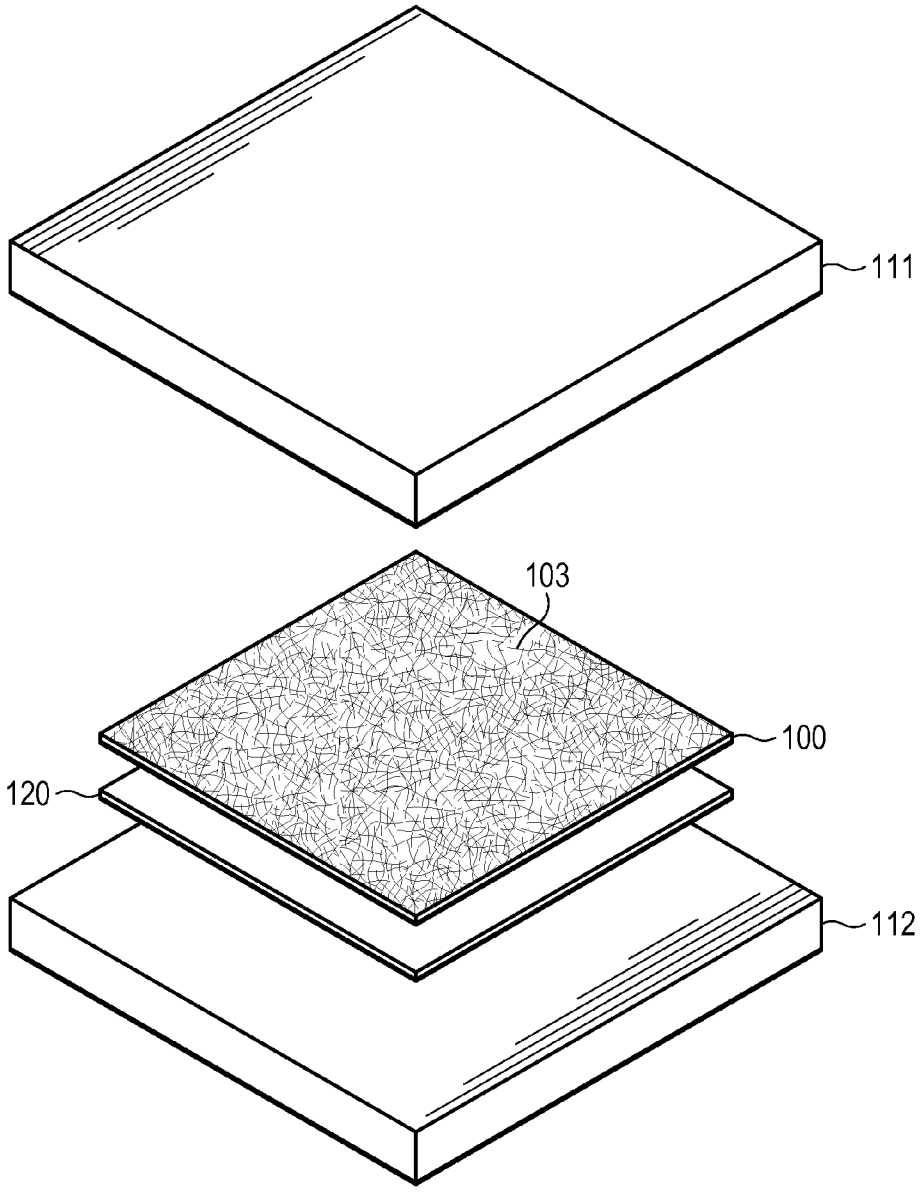

Figure 12A

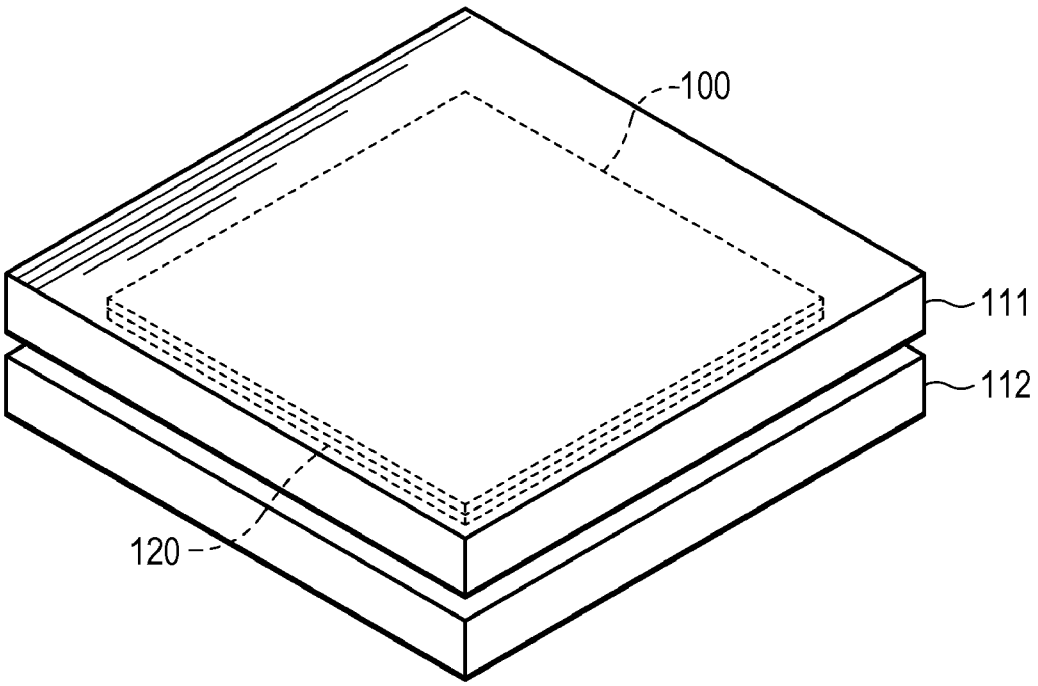

Figure 12B

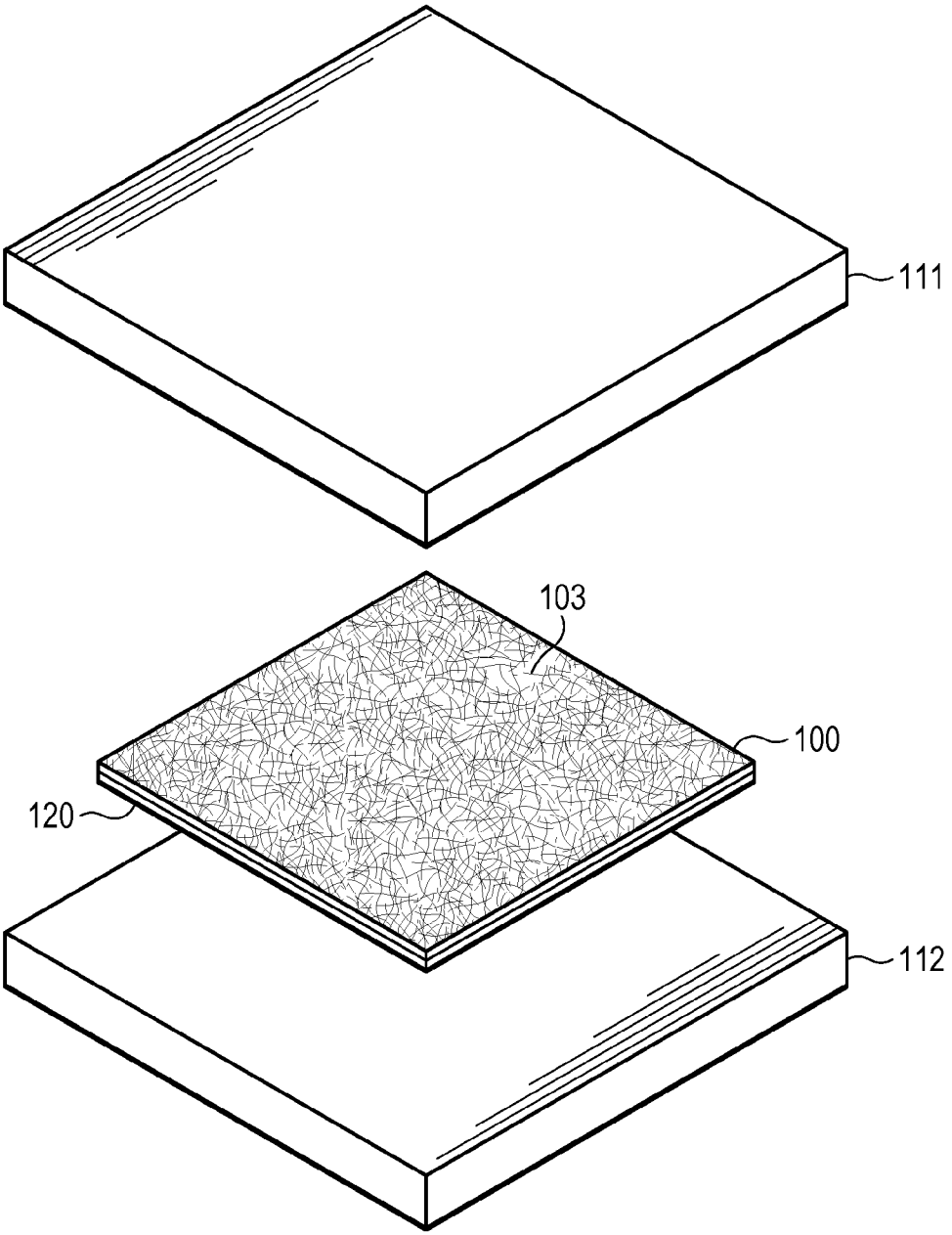

Figure 12C

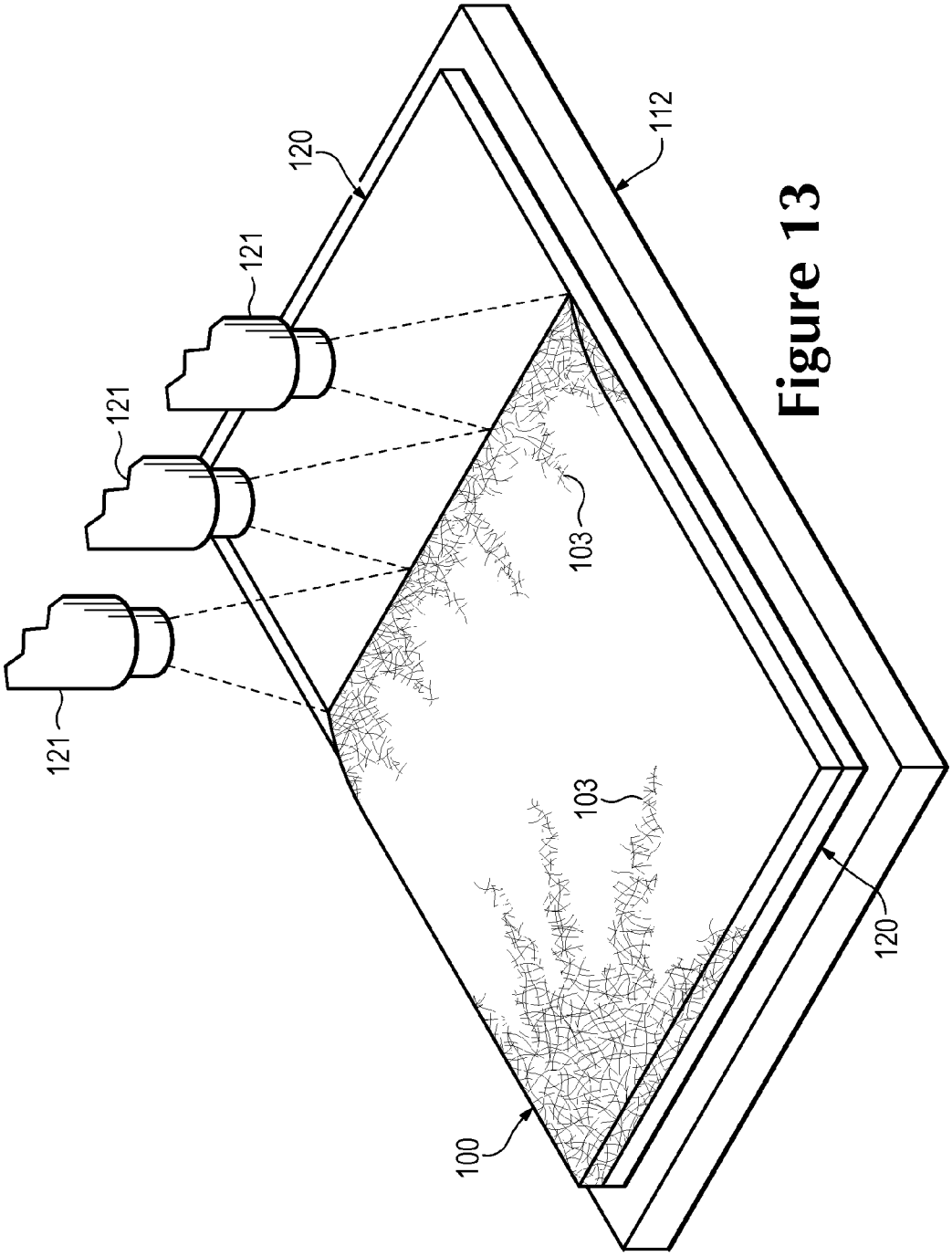

Figure 13

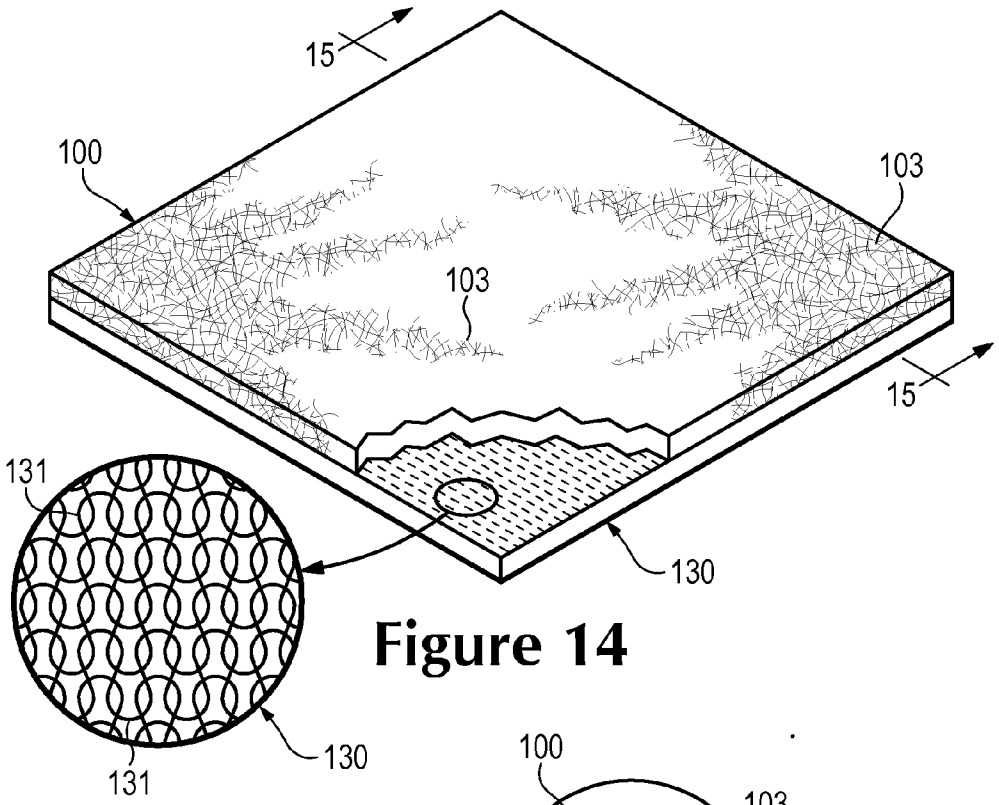

Figure 14

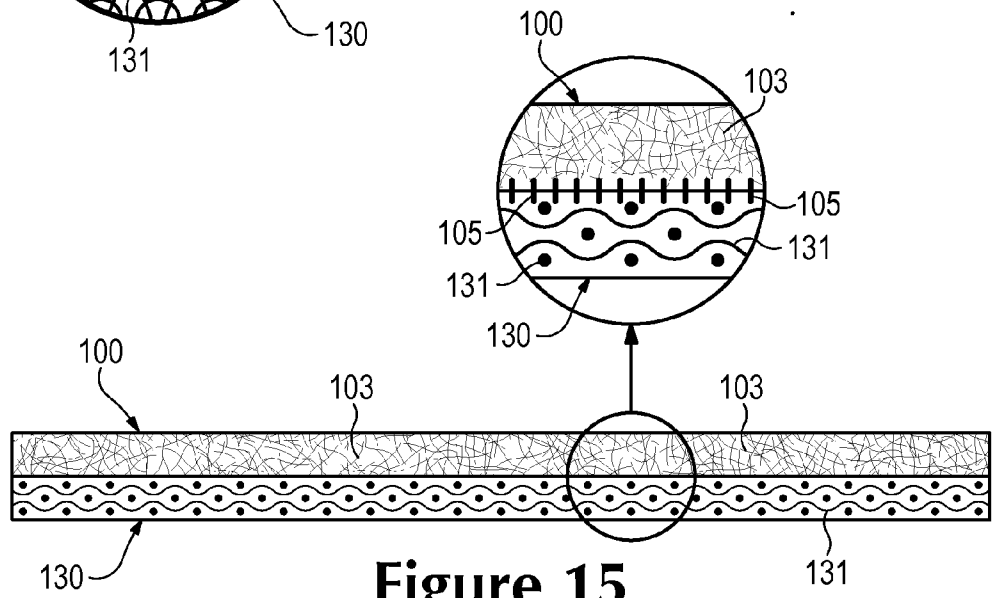

Figure 15

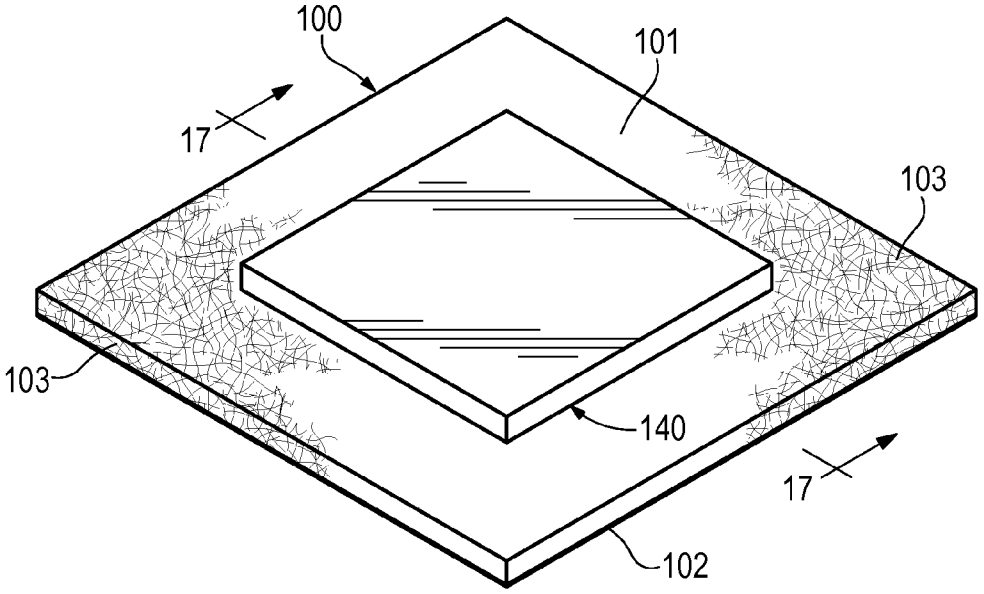

Figure 16

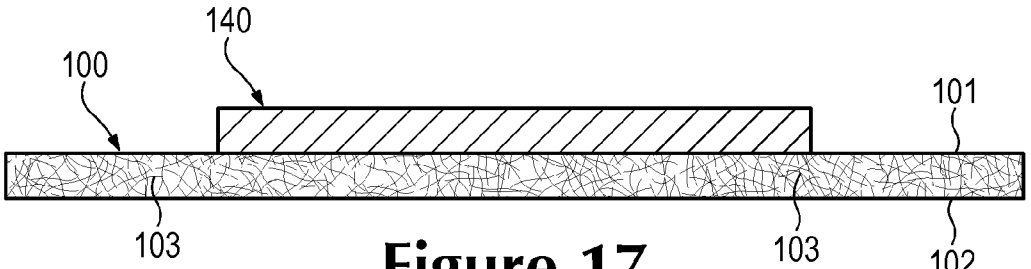

Figure 17

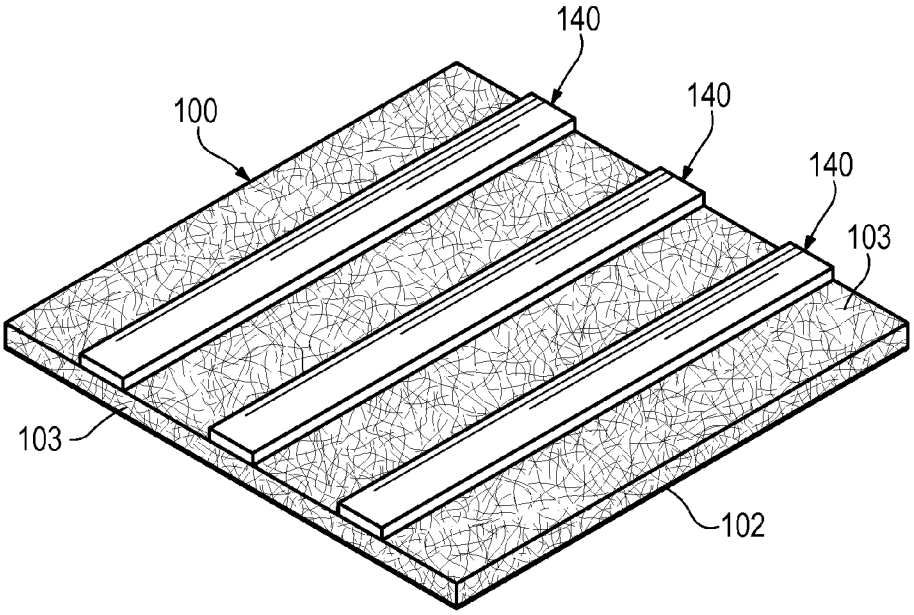

Figure 18A

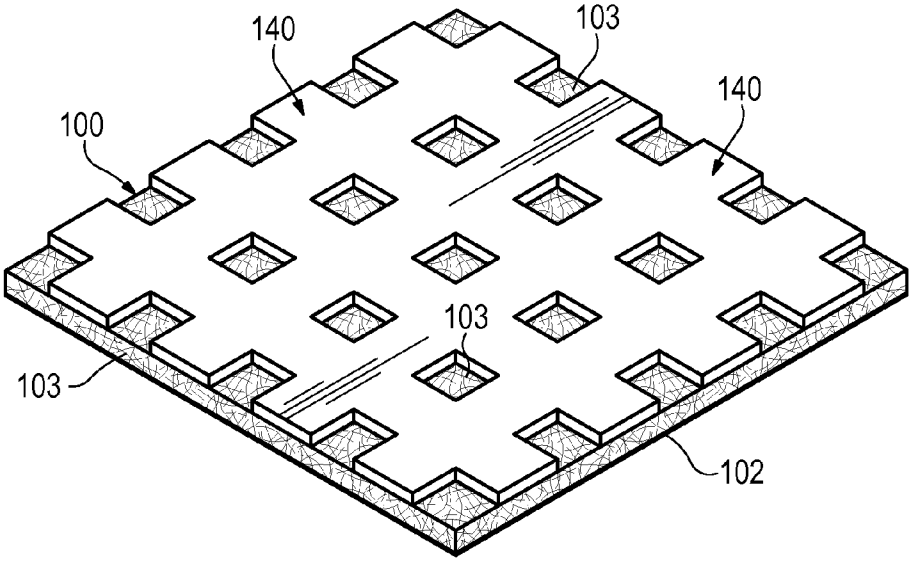

Figure 18B

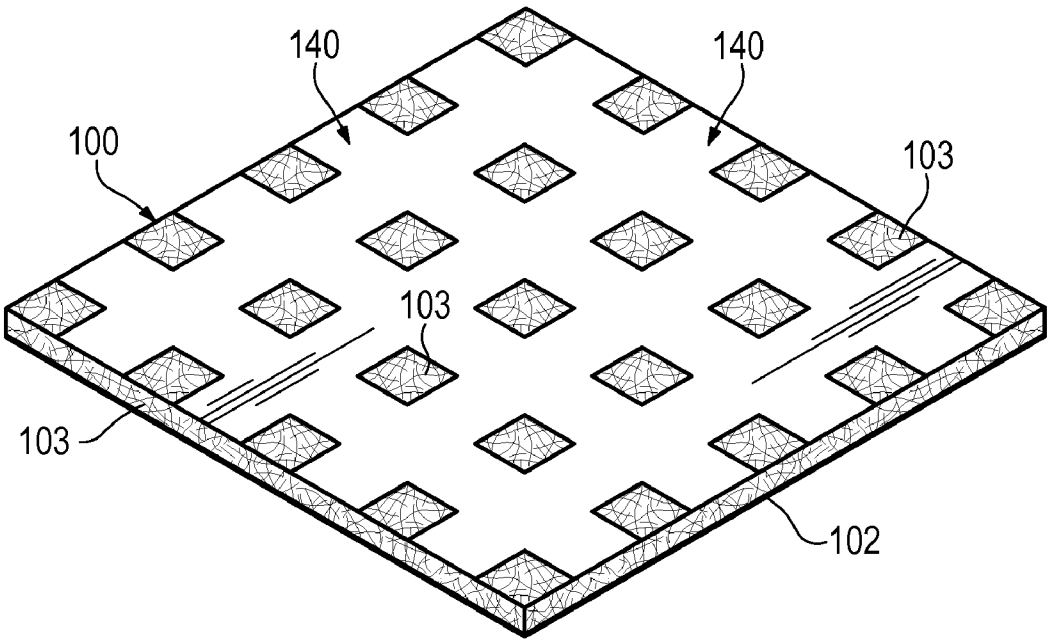

Figure 18C

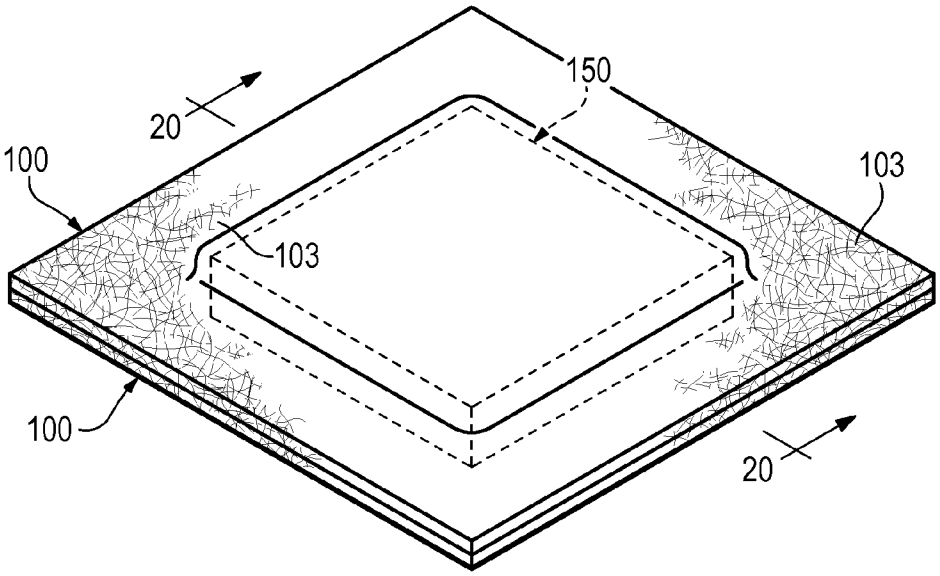

Figure 19

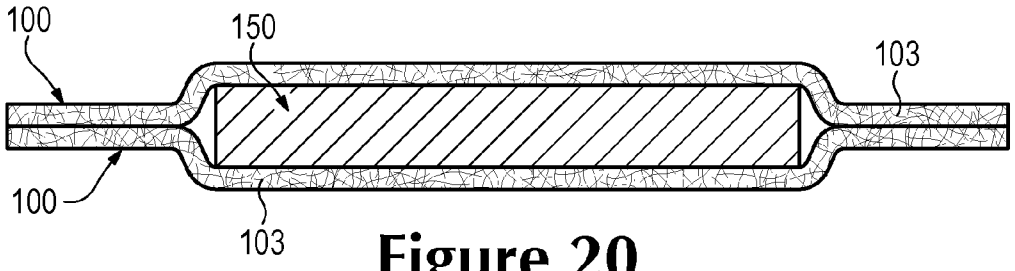

Figure 20

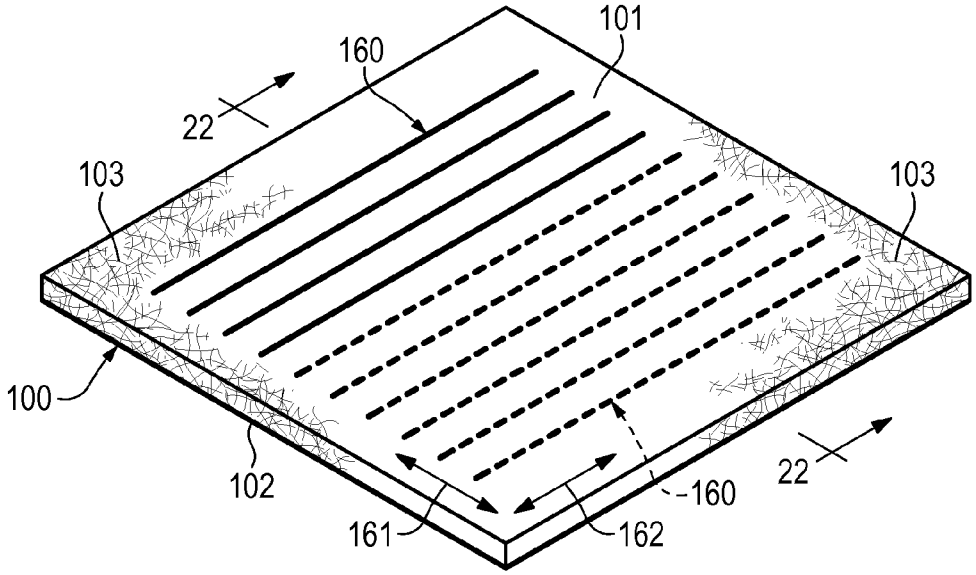

Figure 21

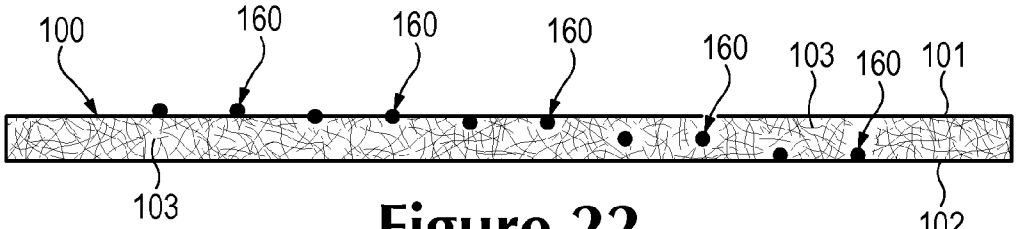

Figure 22

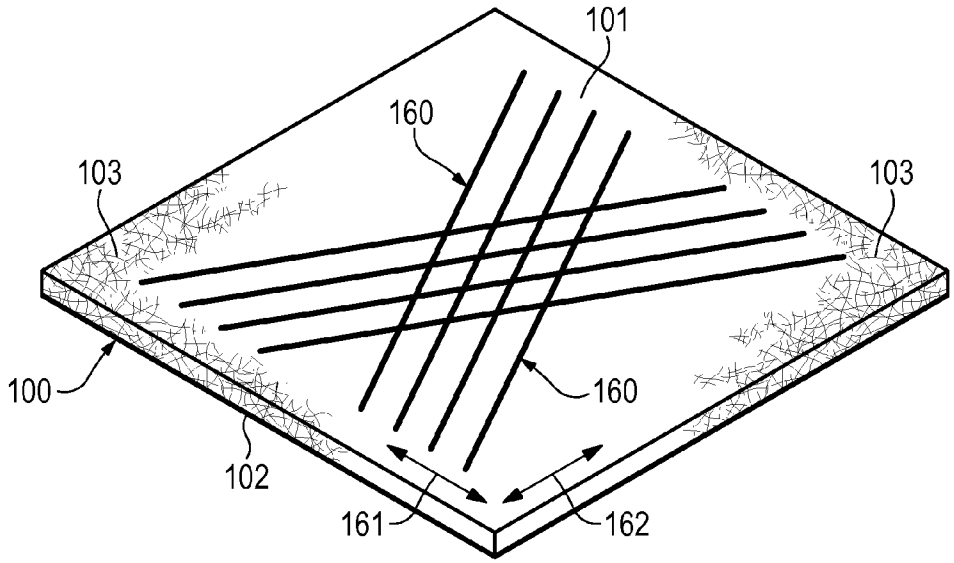

Figure 23A

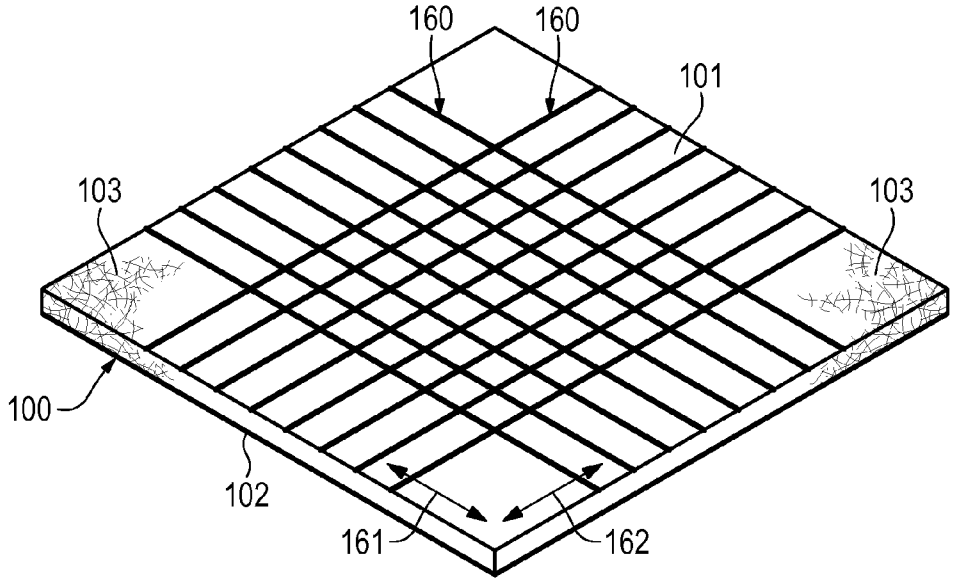

Figure 23B

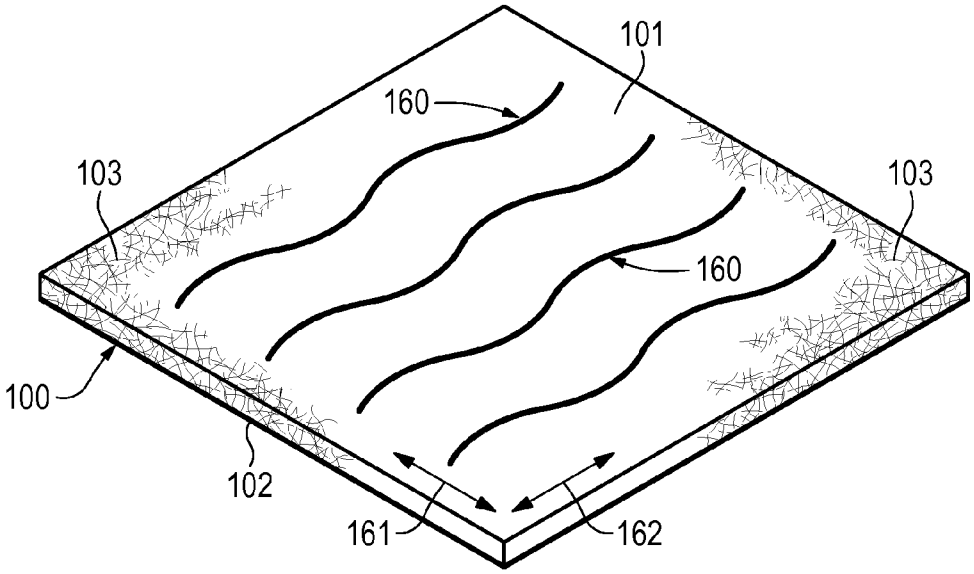

Figure 23C

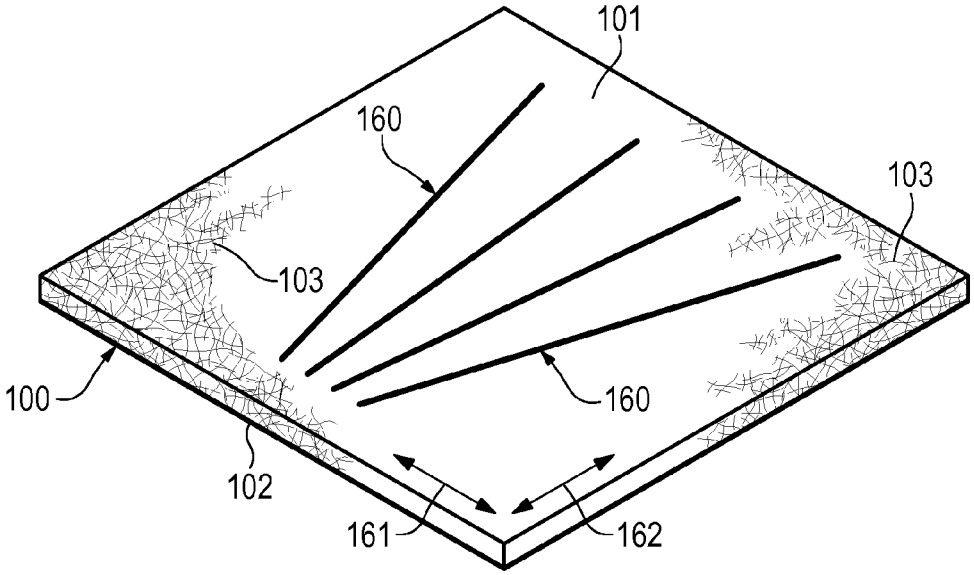

Figure 23D

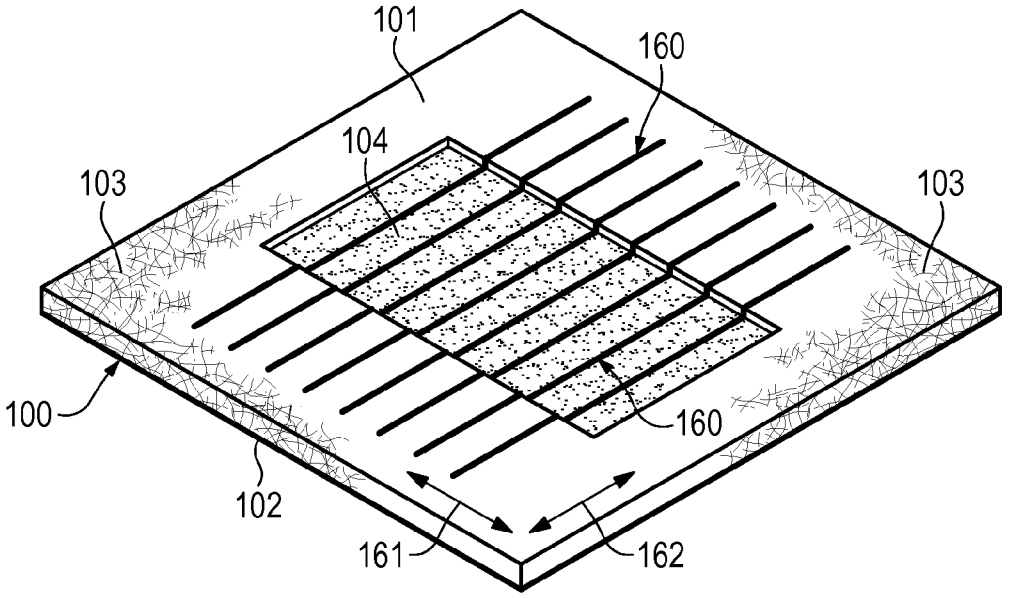

Figure 23E

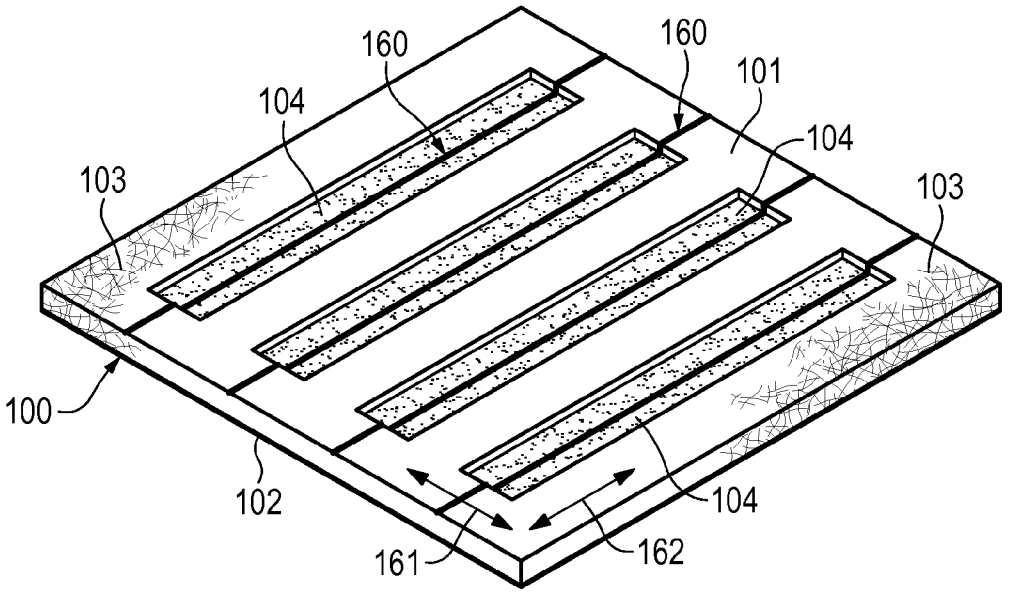

Figure 23F

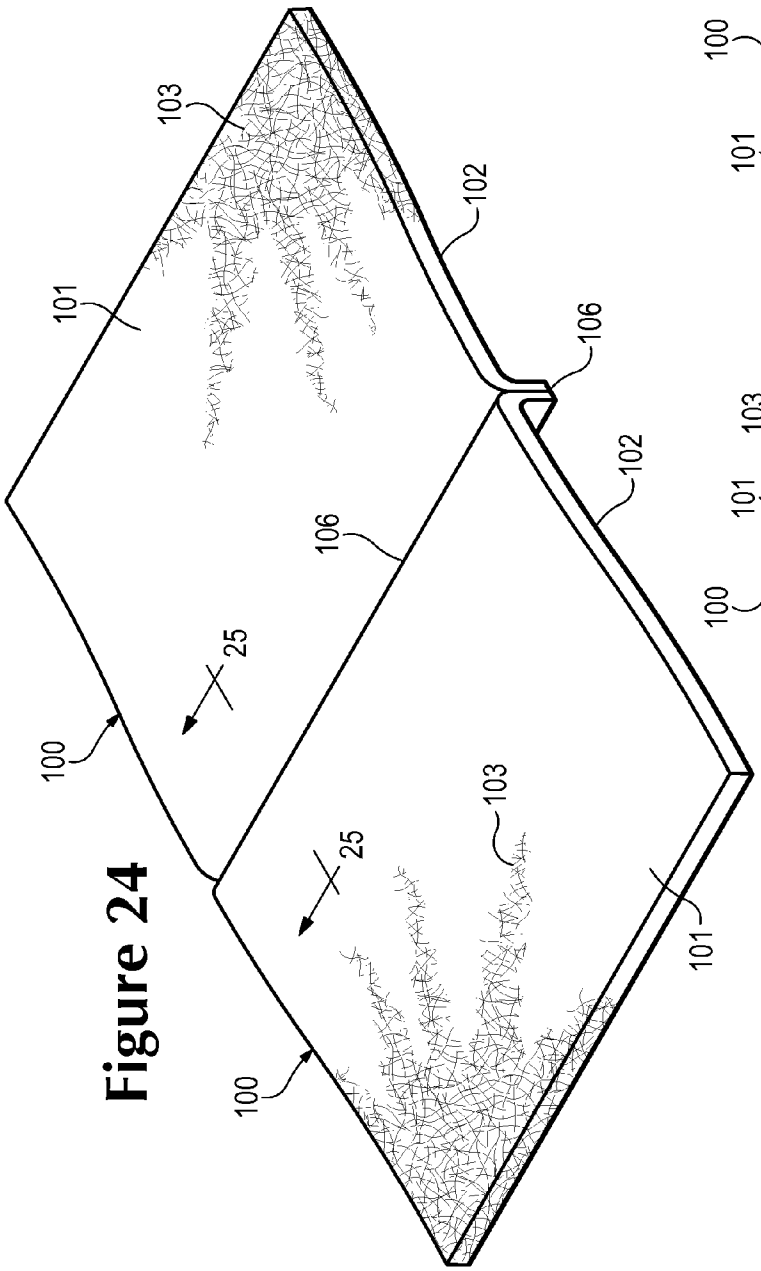

Figure 24

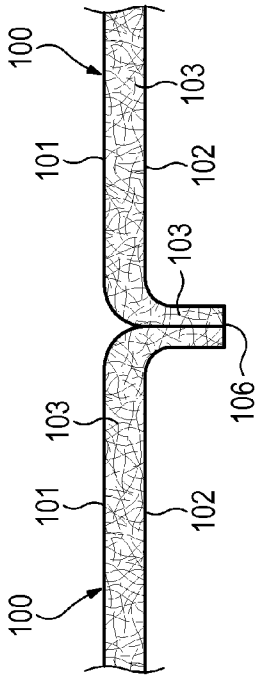

Figure 25

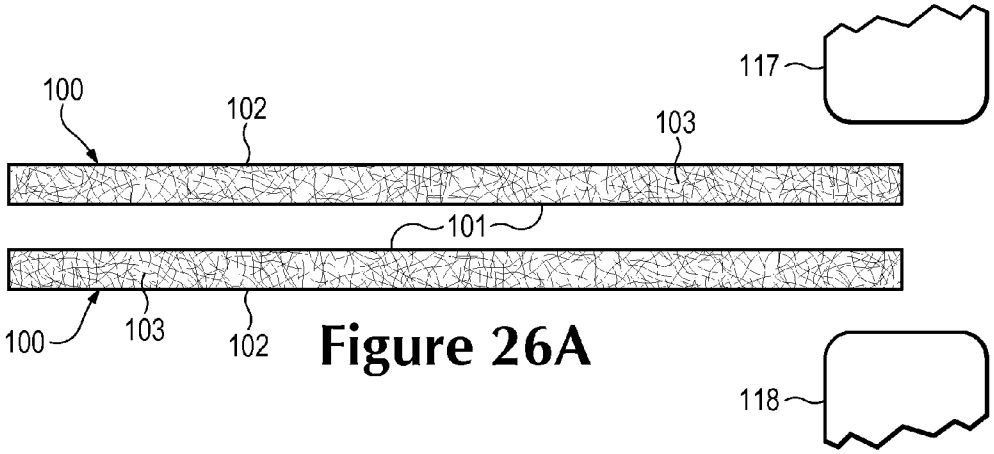

Figure 26A

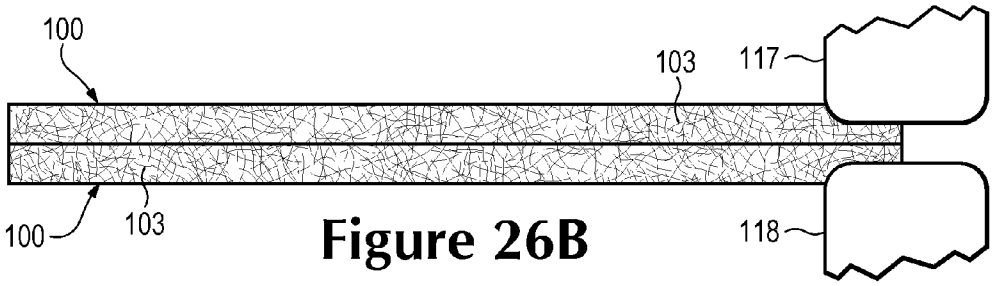

Figure 26B

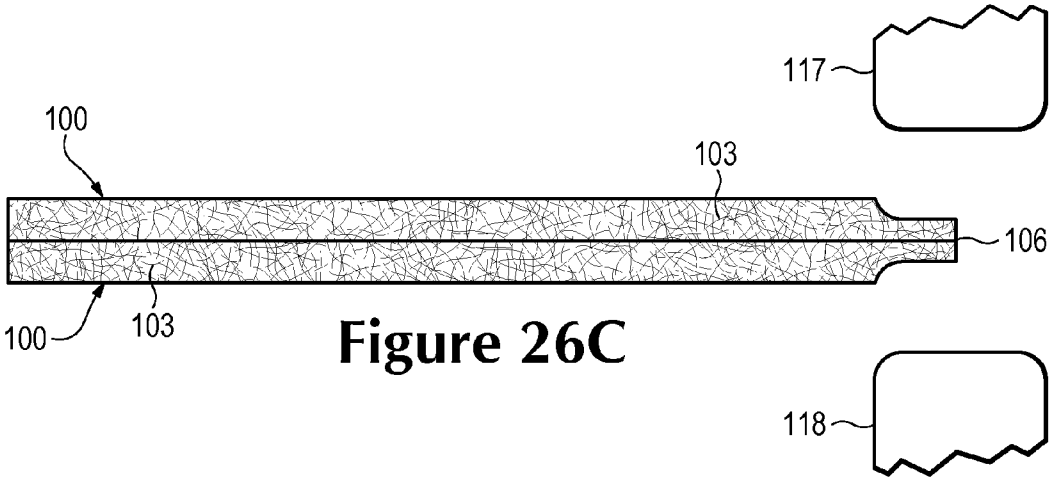

Figure 26C

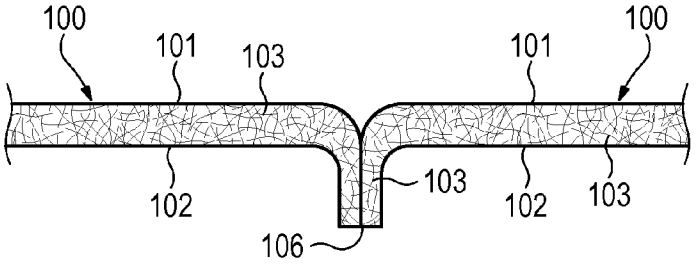

Figure 26D

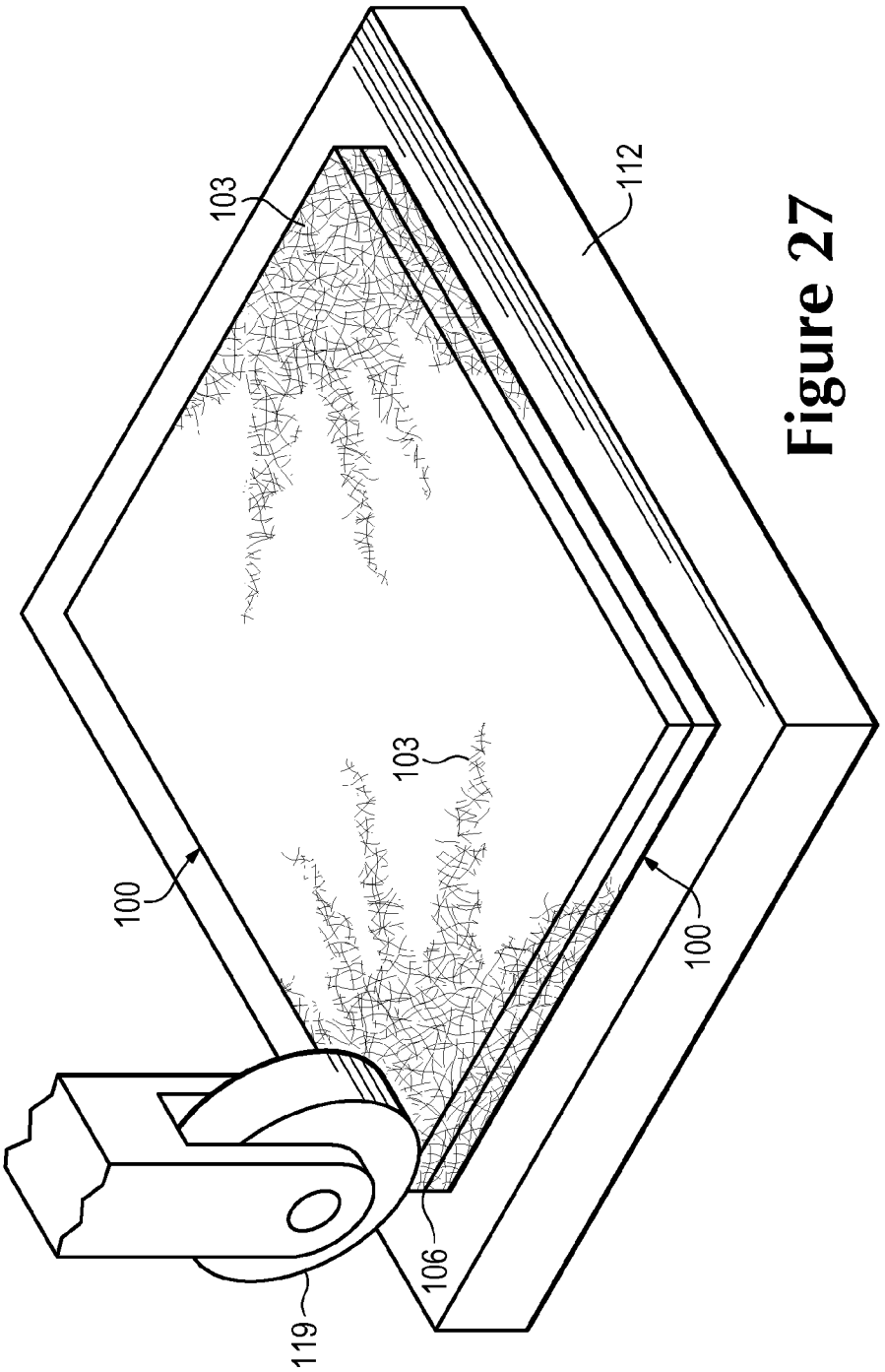

Figure 27

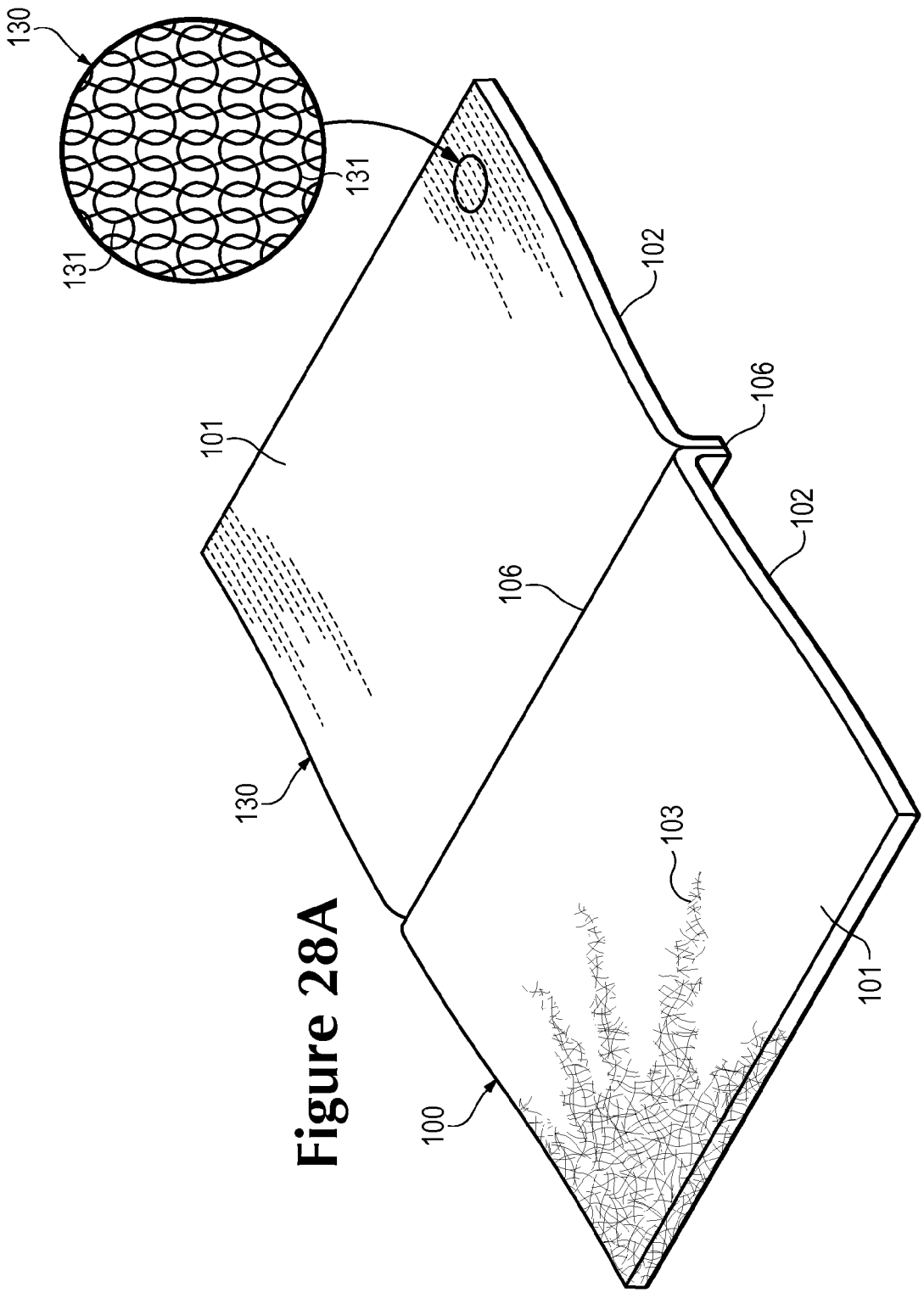

Figure 28A

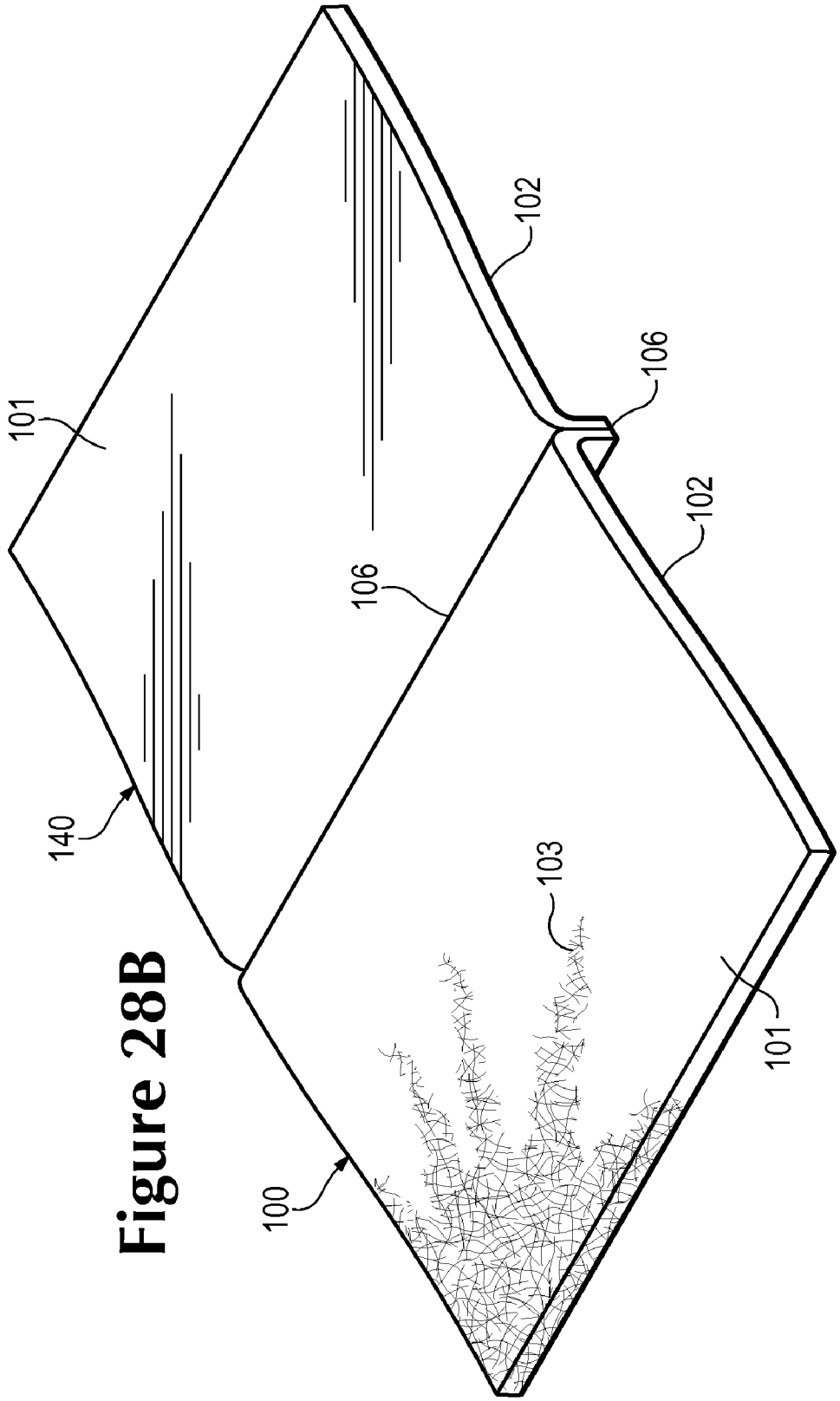

Figure 28B

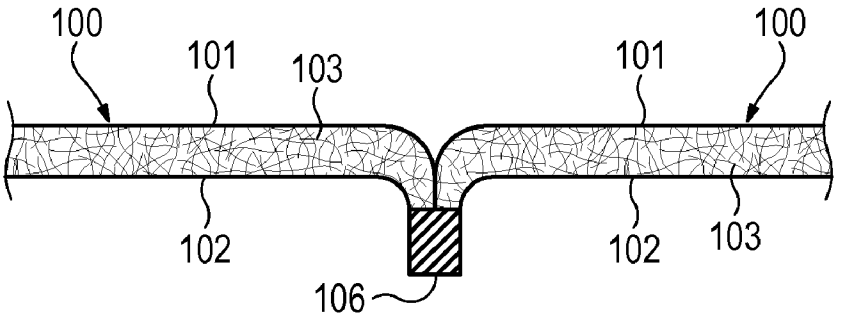

Figure 29A

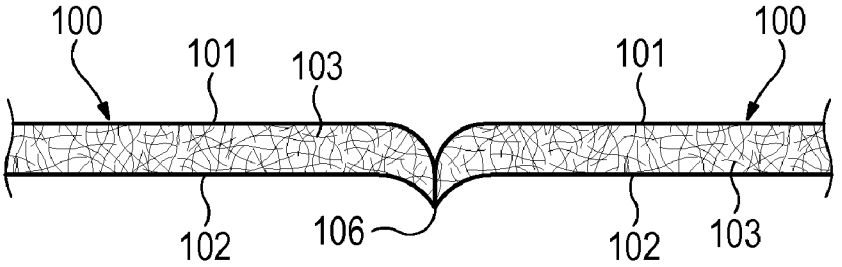

Figure 29B

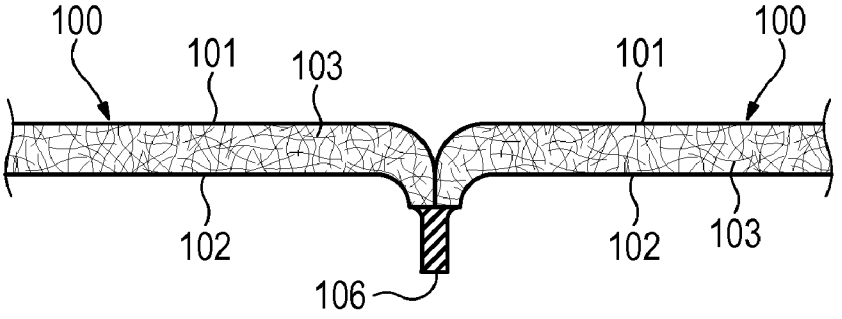

Figure 29C

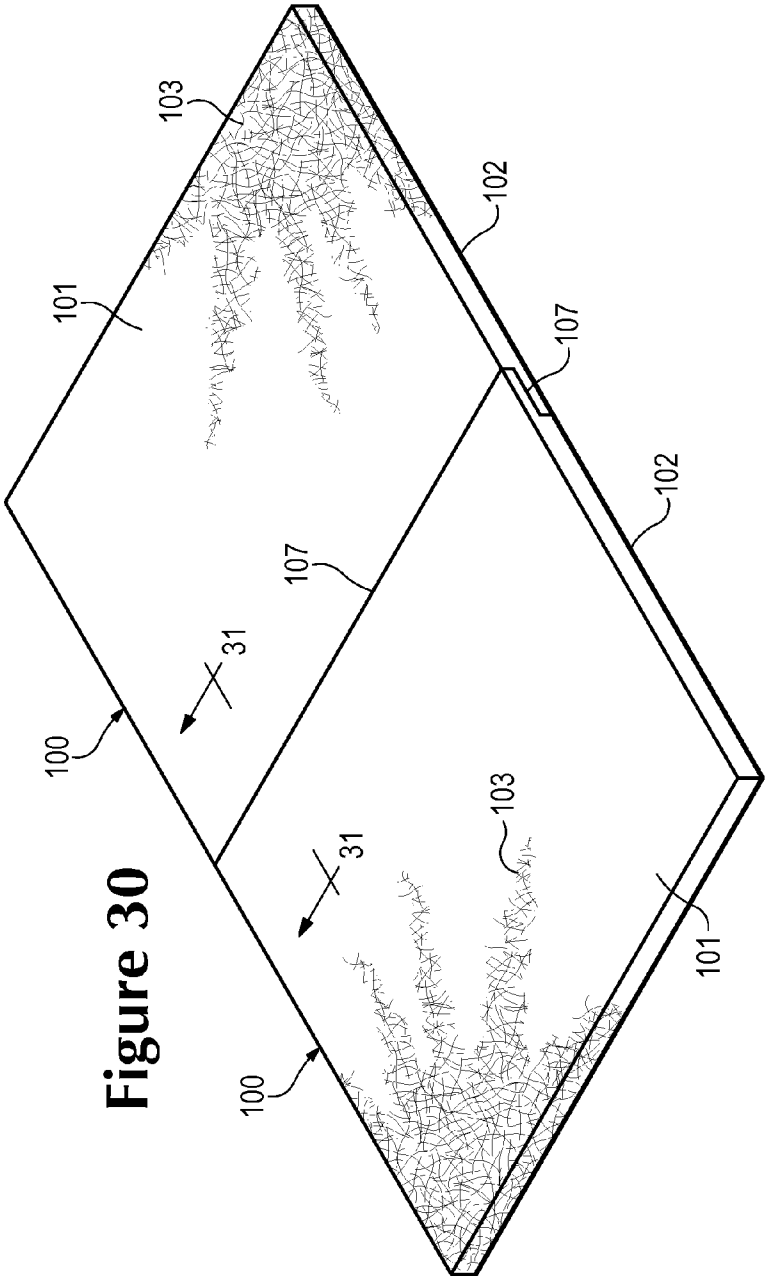

Figure 30

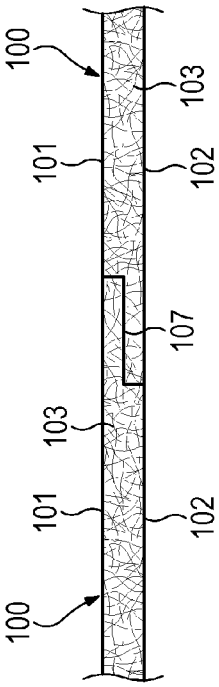

Figure 31

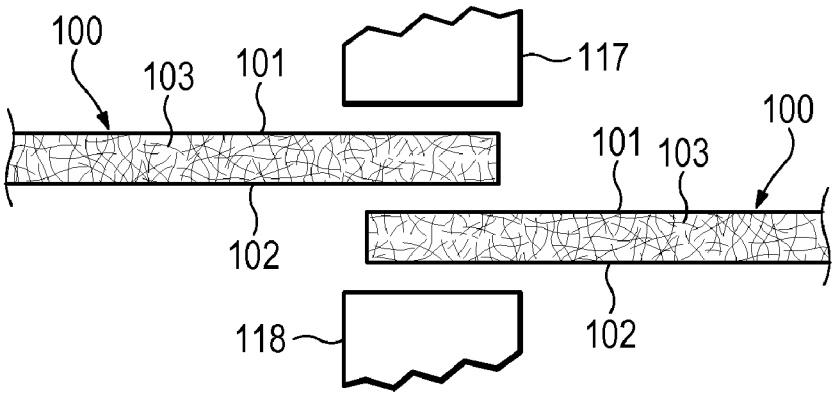

Figure 32A

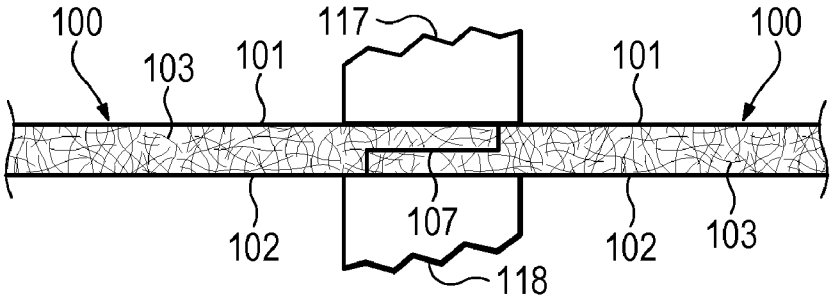

Figure 32B

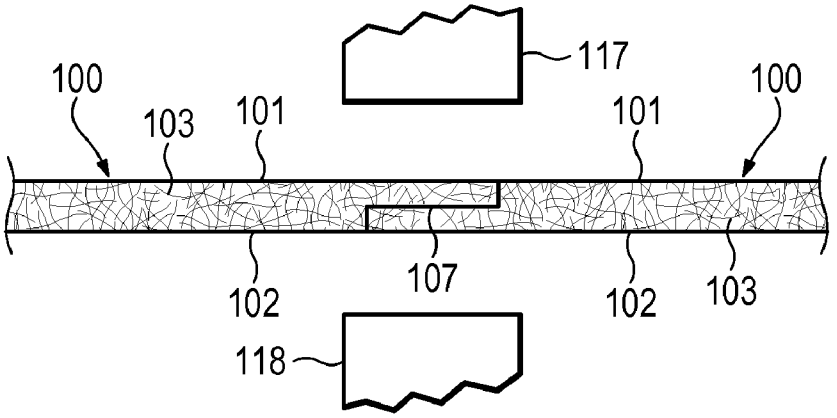

Figure 32C

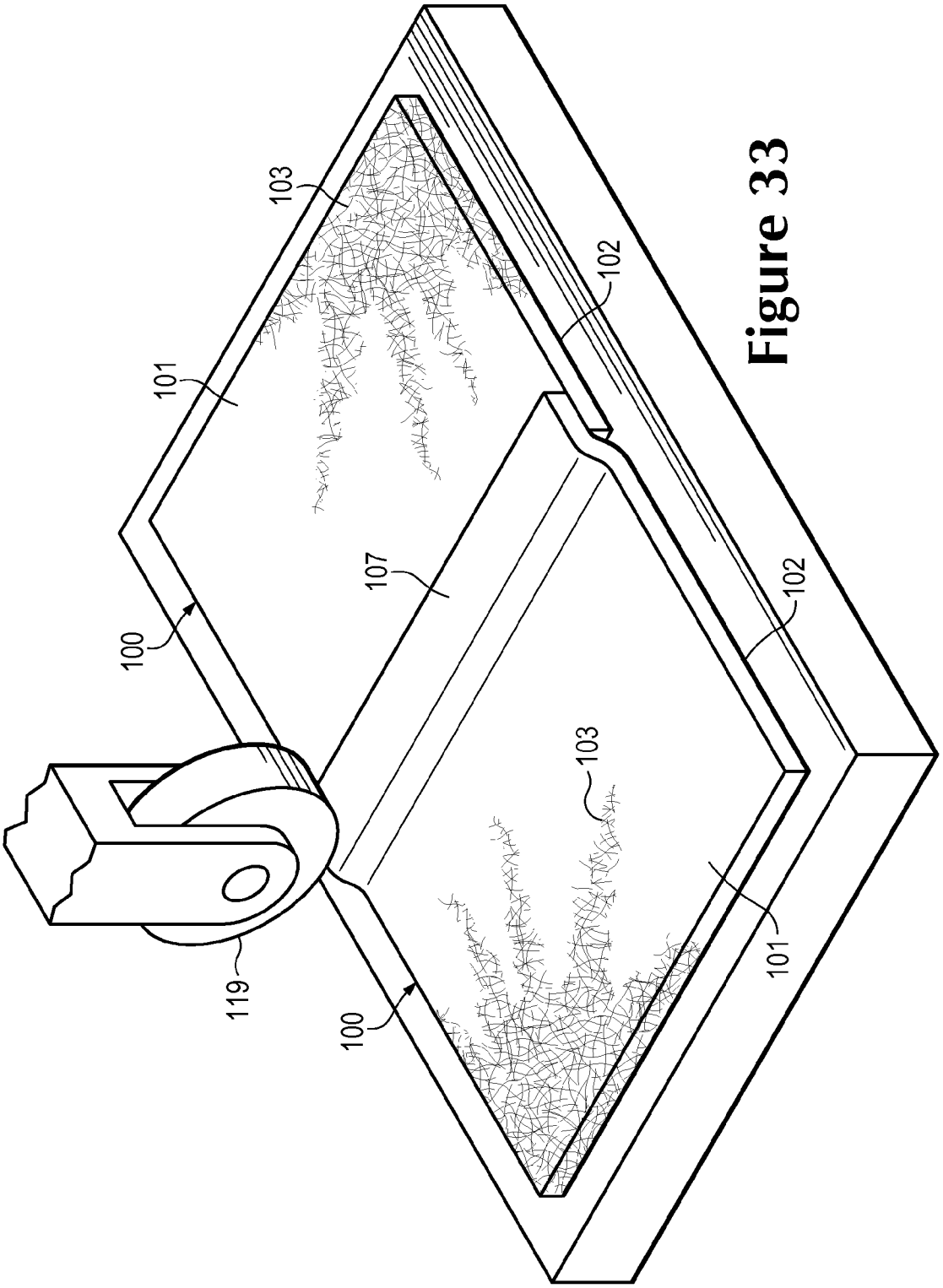

Figure 33

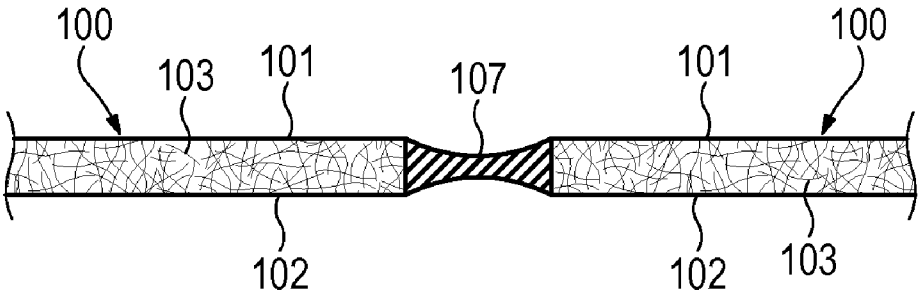

Figure 34A

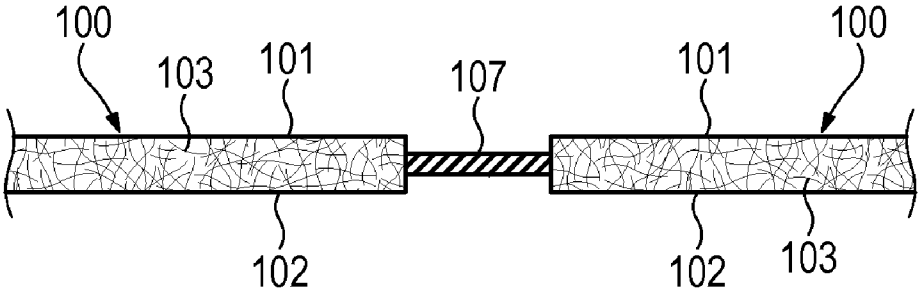

Figure 34B

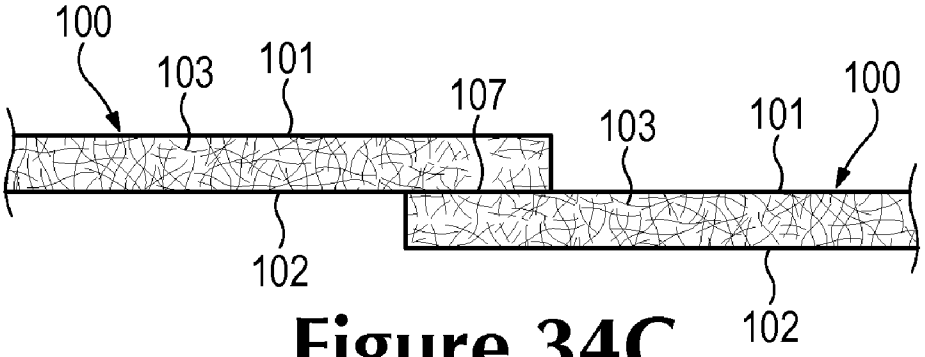

Figure 34C

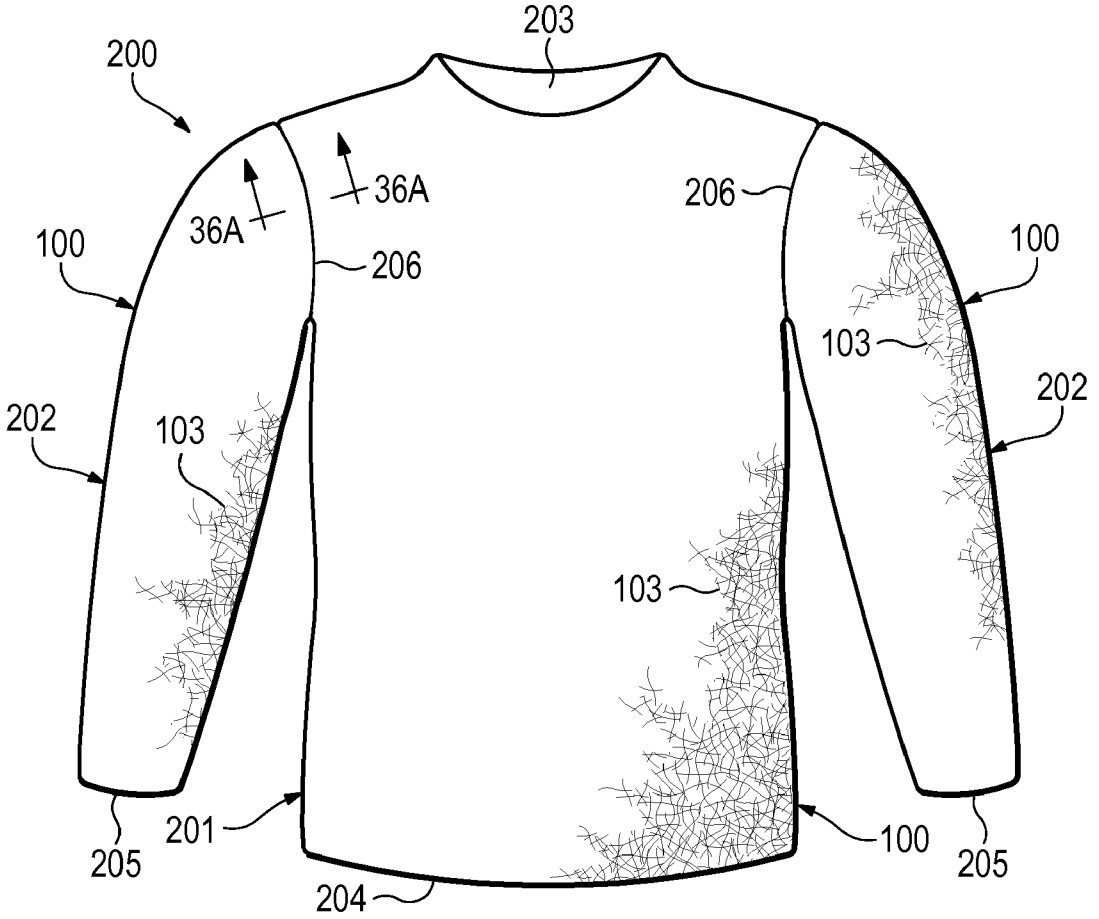
203
200
36A
36A
206
206
100
100
103
202
202
103
103
205
201
100
205
204

Figure 35A

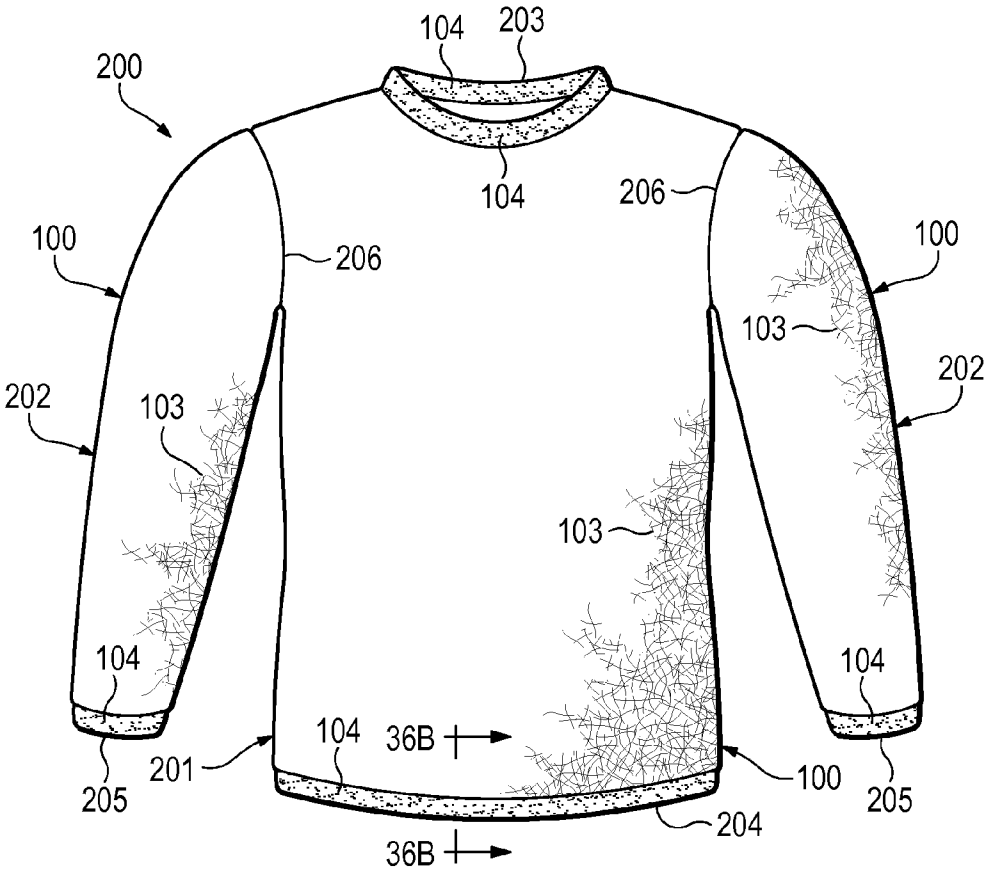
104
203
200
104
206
100
206
100
103
202
202
103
103
104
104
104
36B
201
100
205
205
204
36B

Figure 35B

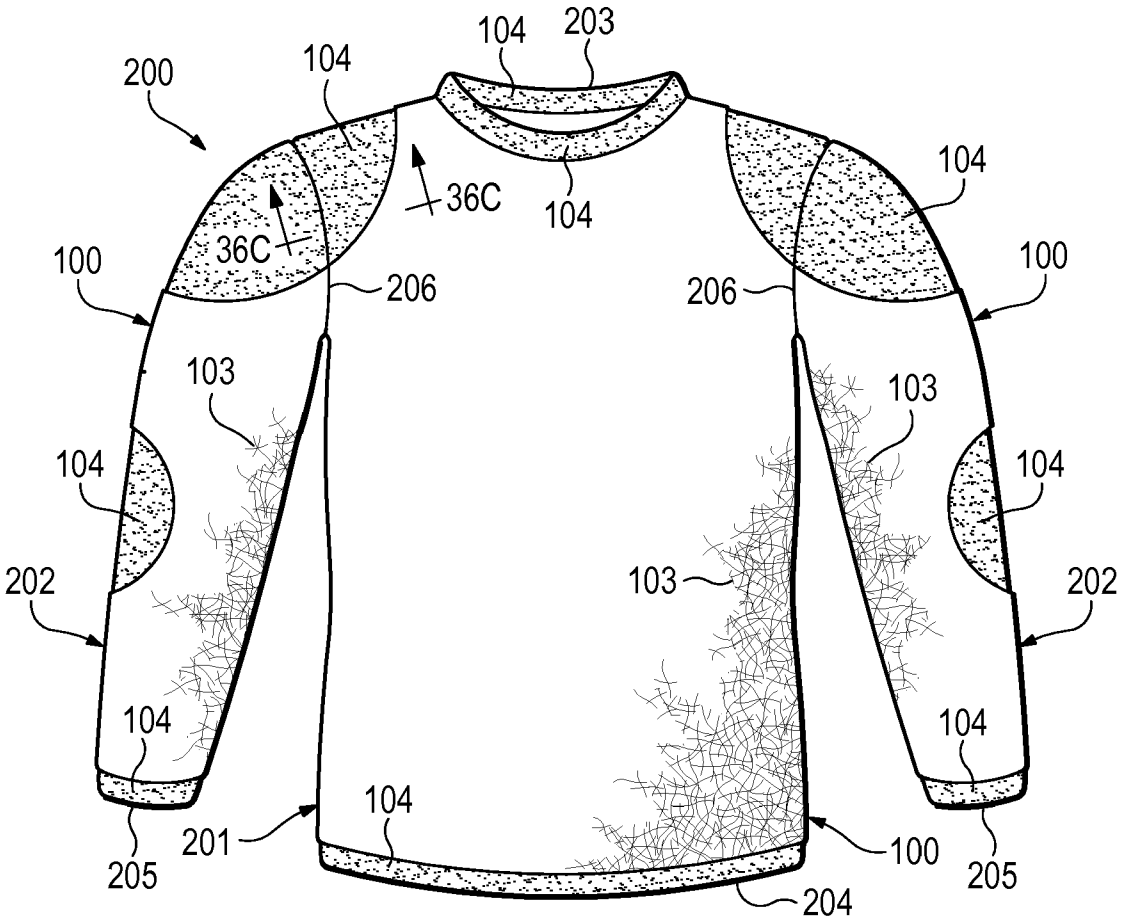
200
104
203
104
36C
104
36C
104
100
206
206
100
103
103
104
104
202
103
202
104
104
205
201
104
100
205
204

Figure 35C

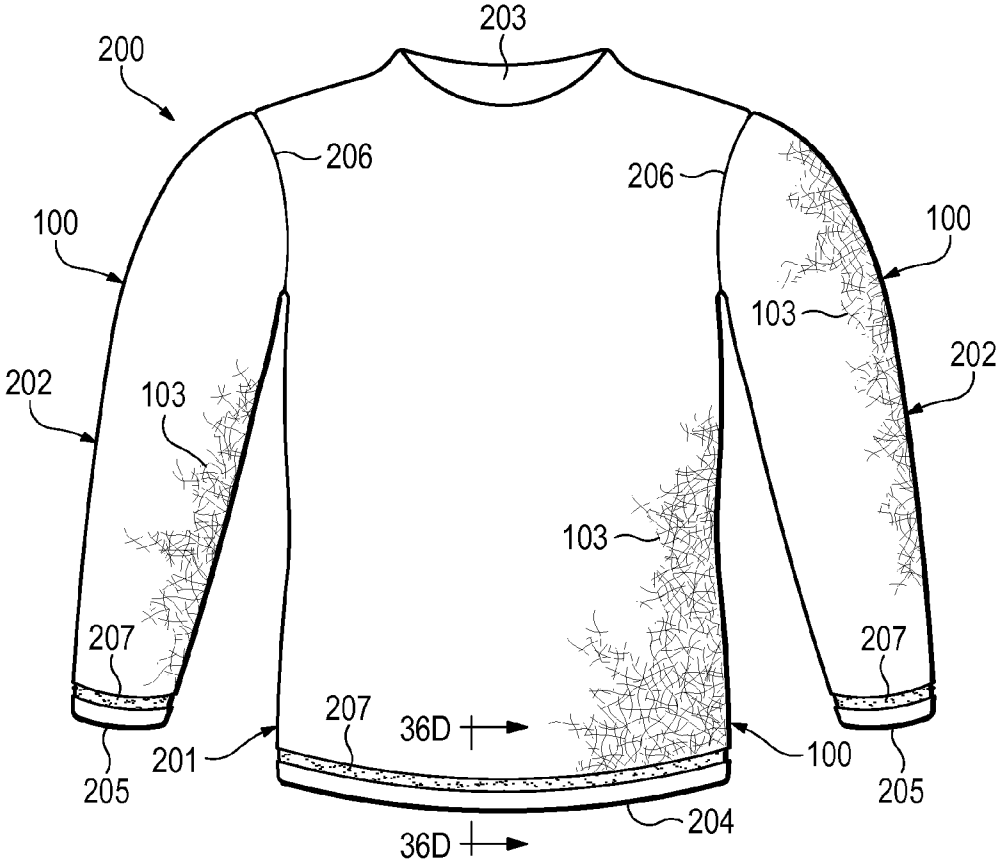
200
203
206
206
100
100
103
202
202
103
103
207
207
207
36D
201
100
205
205
204
36D

Figure 35D

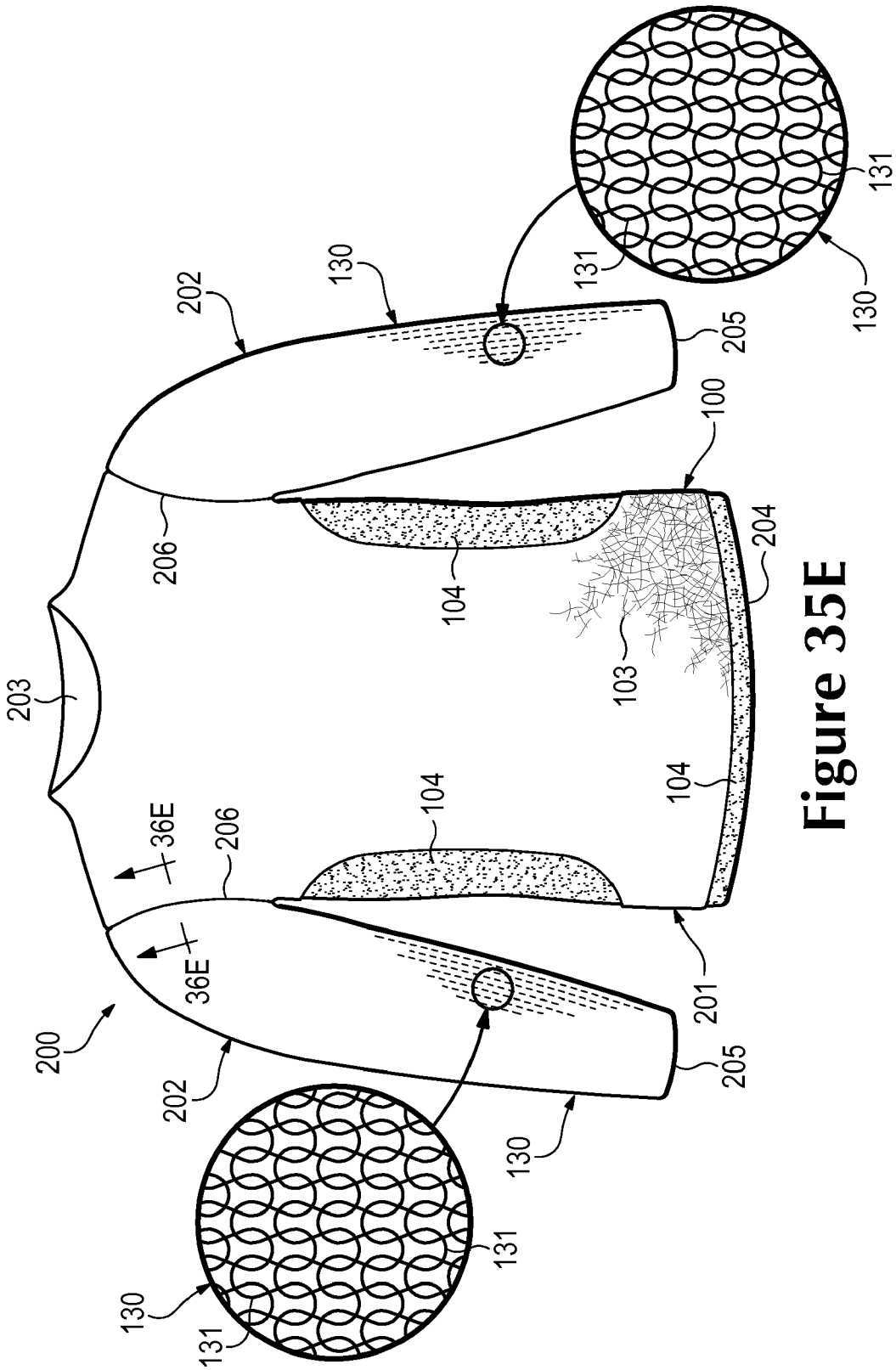

Figure 35E

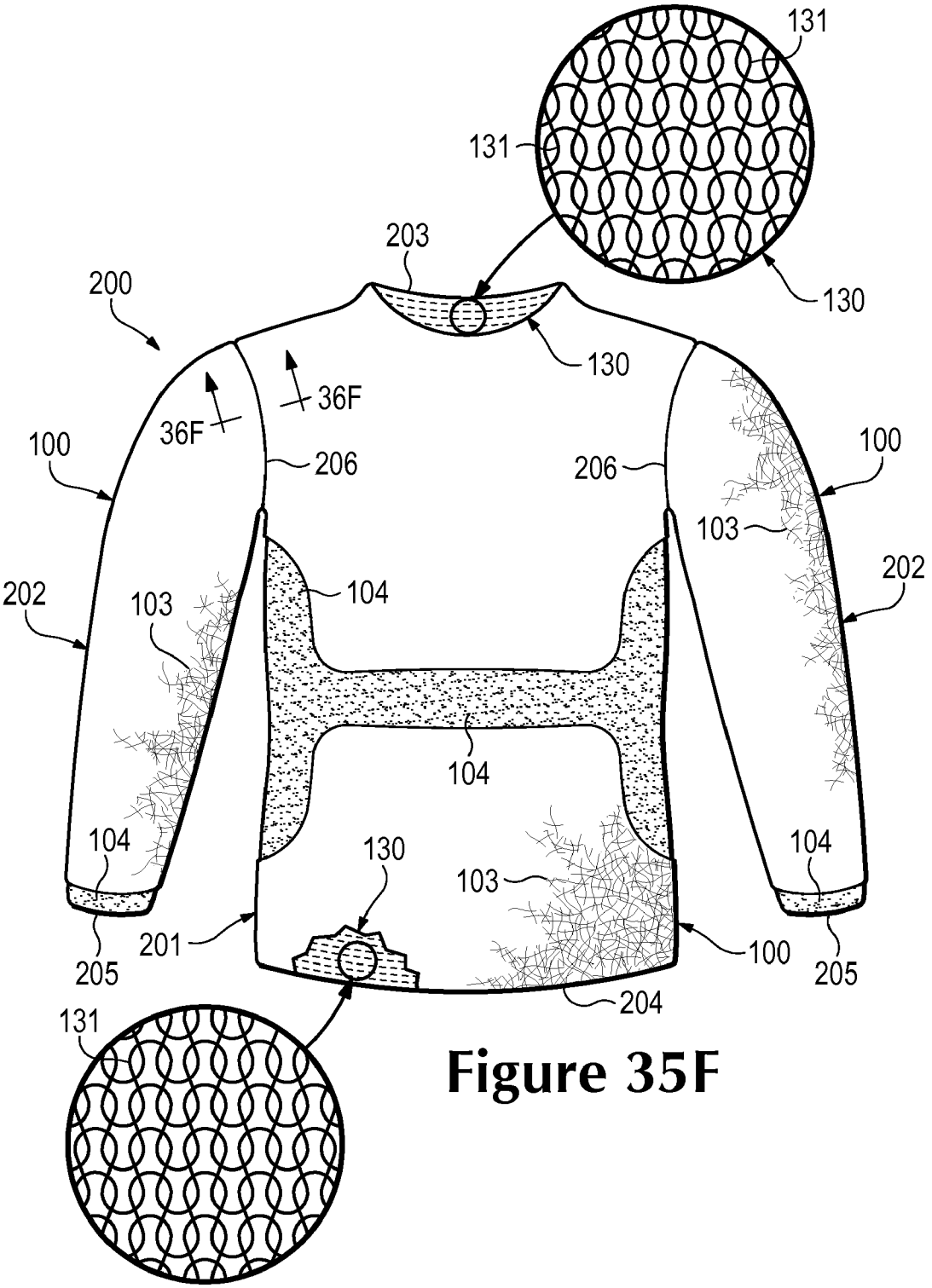
131
131
203
200
130
130
36F
36F
100
206
206
100
103
202
202
103
104
104
104
130
104
103
205
201
100
205
204
131

Figure 35F

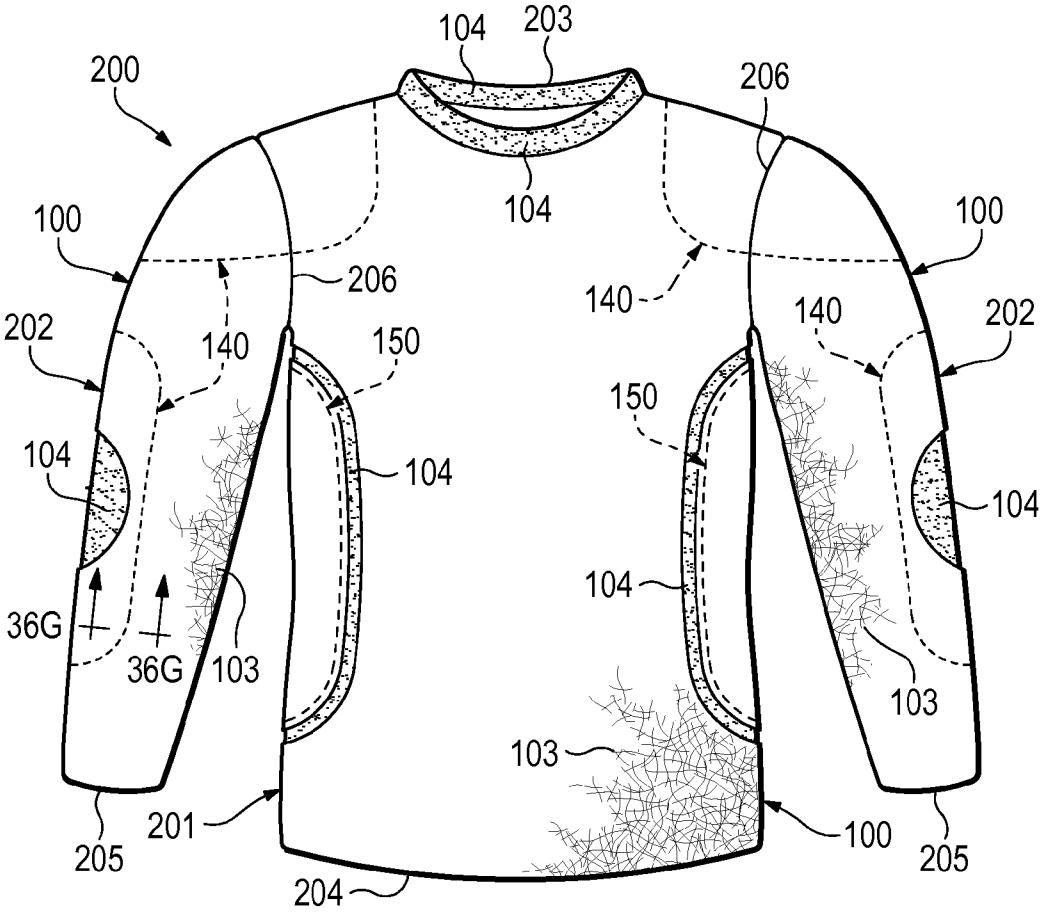
200
104
203
206
104
100
100
206
140
140
202
140
150
202
150
104
104
104
104
36G
36G
103
103
103
201
100
205
205
204

Figure 35G

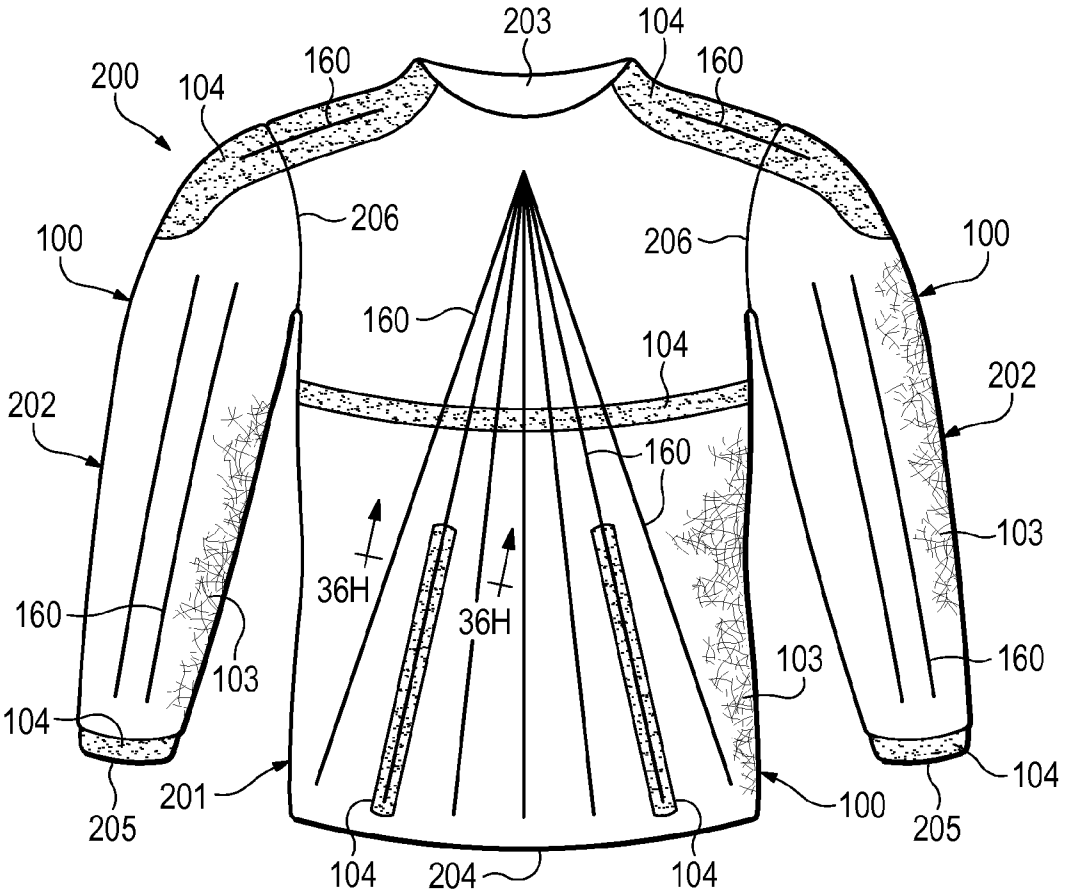
203
104
160
200
104
160
206
206
100
100
160
104
202
202
160
103
36H
36H
160
103
103
160
104
104
201
100
205
205
104
204
104

Figure 35H

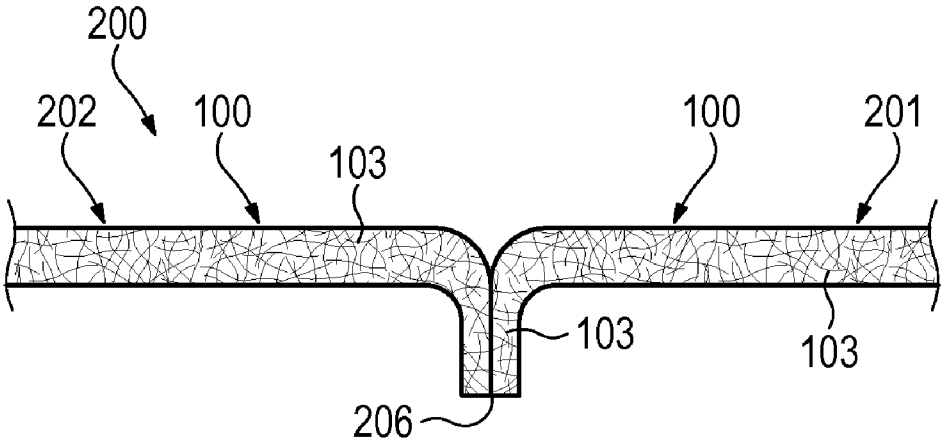

Figure 36A

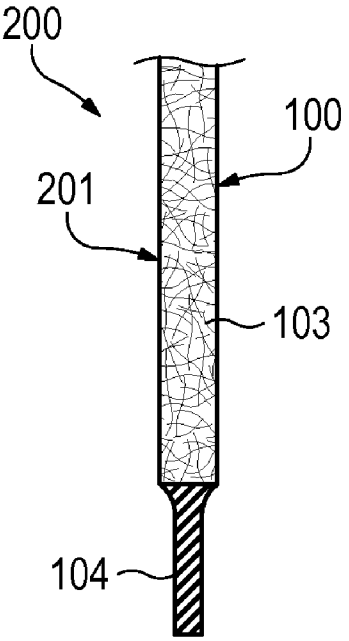

Figure 36B

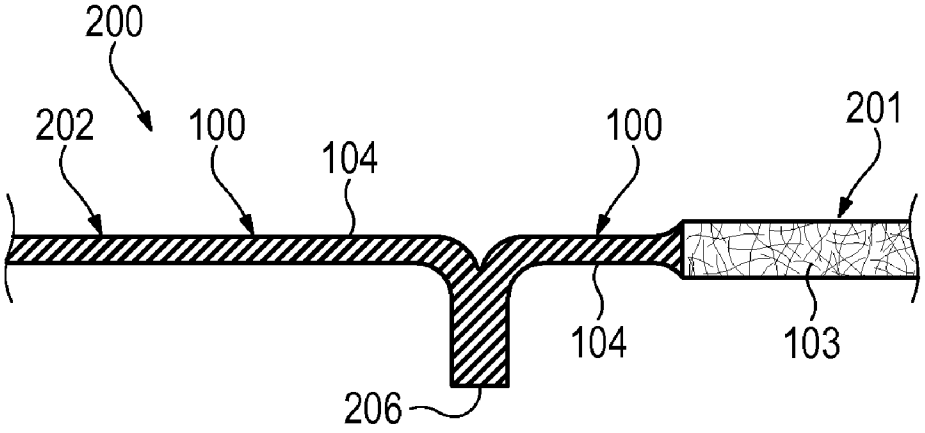

Figure 36C

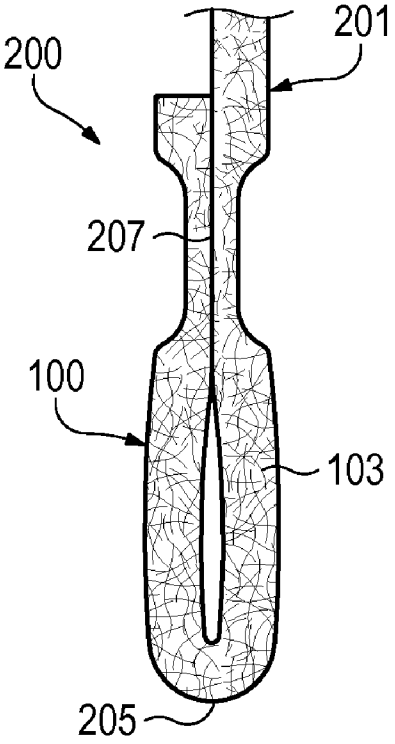

Figure 36D

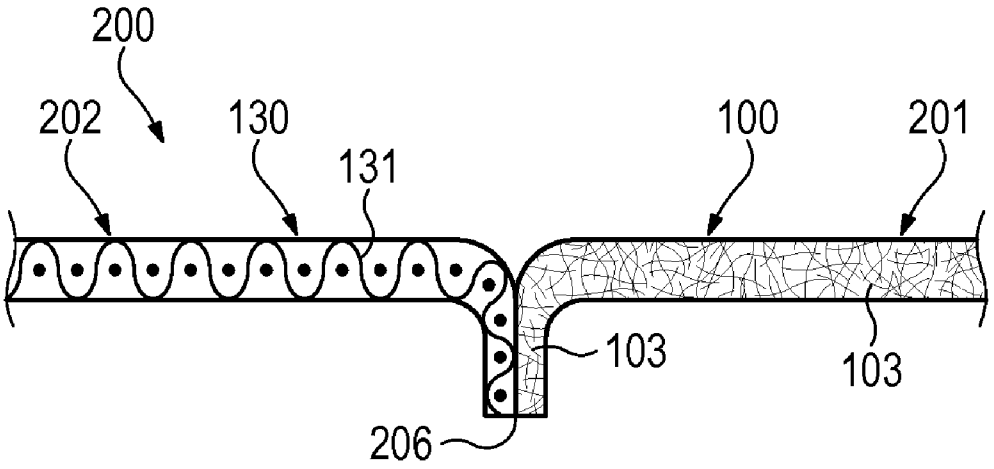

Figure 36E

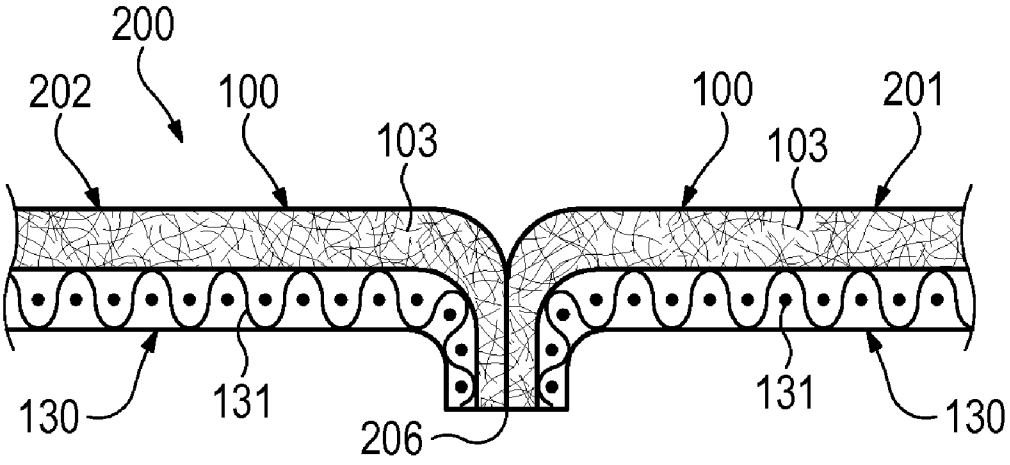

Figure 36F

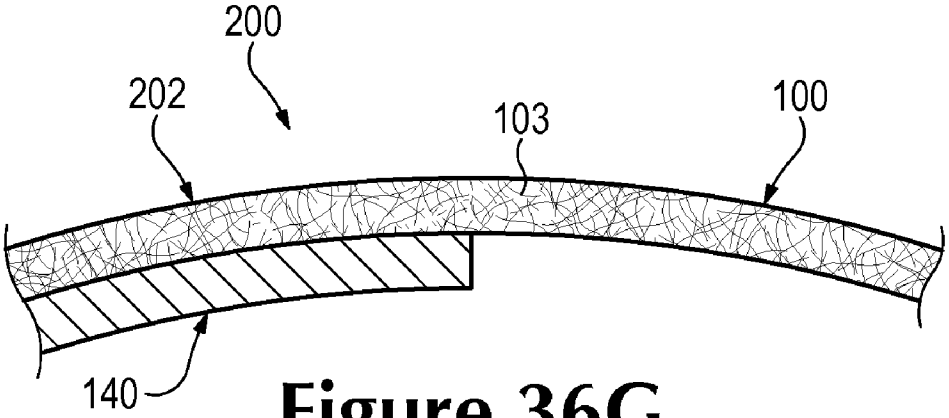

Figure 36G

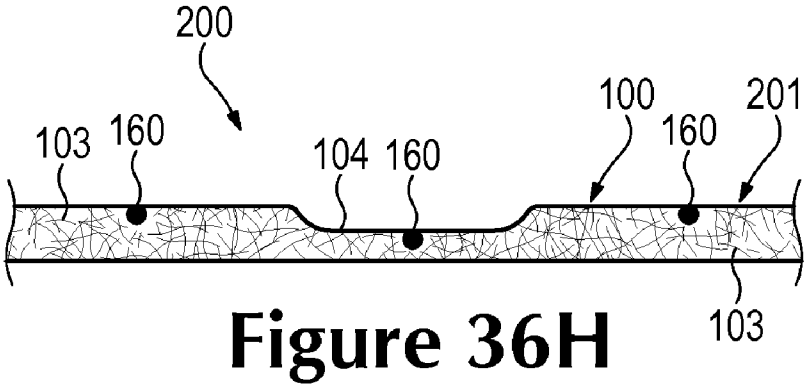

Figure 36H

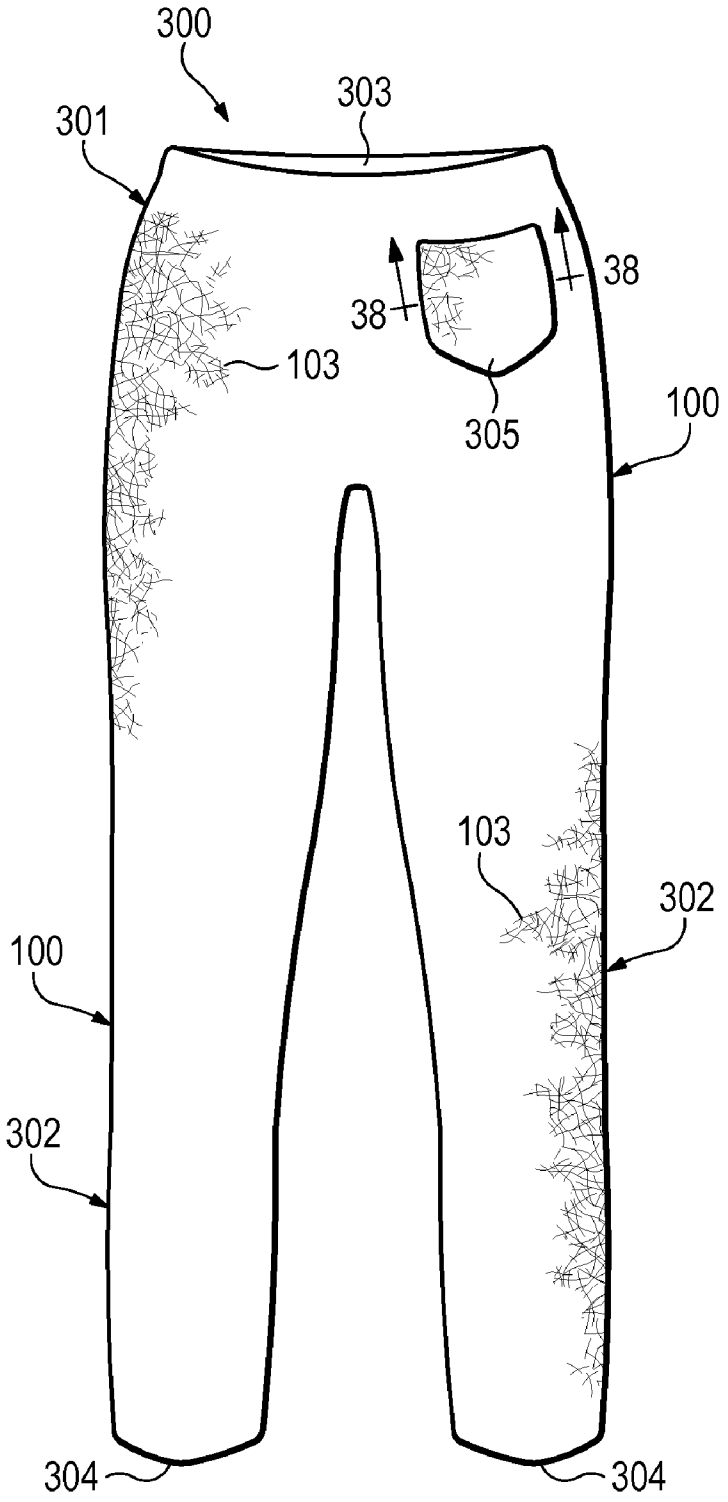

Figure 37A

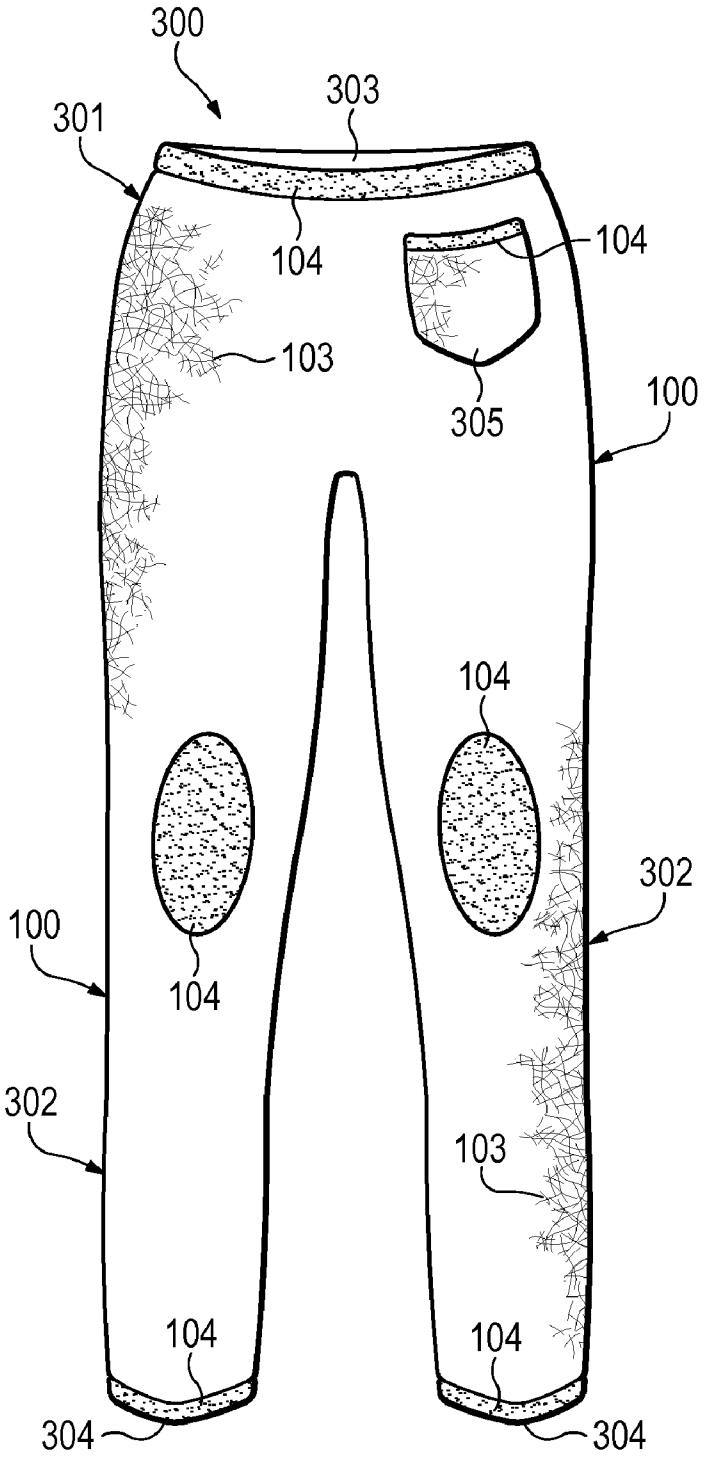
300
303
301
104
104
103
305
100
104
104
302
100
302
103
104
104
304
304

Figure 37B

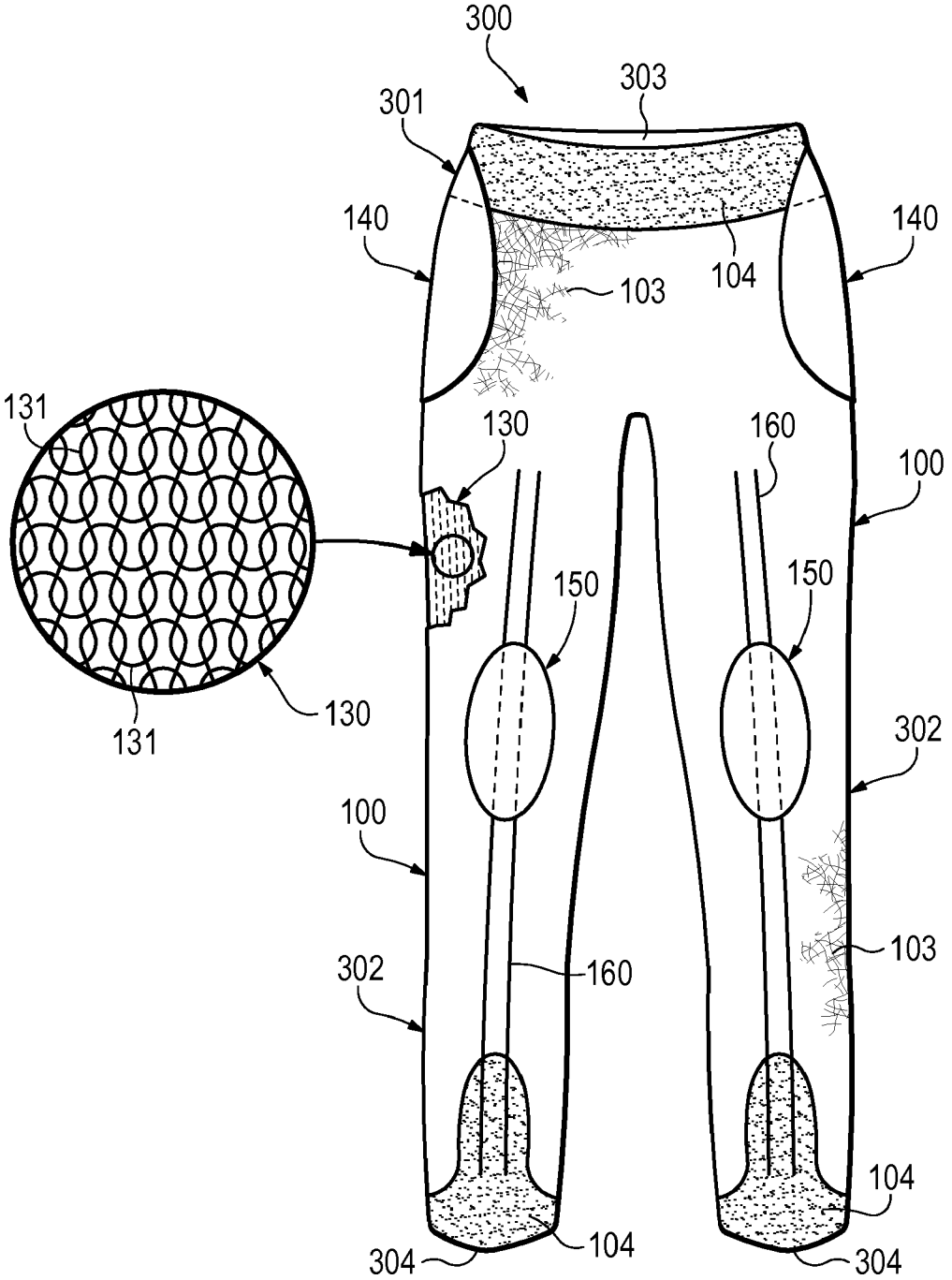
300
303
301
140
140
104
103
131
130
160
100
150
150
130
131
302
100
103
302
160
104
104
304
304

Figure 37C

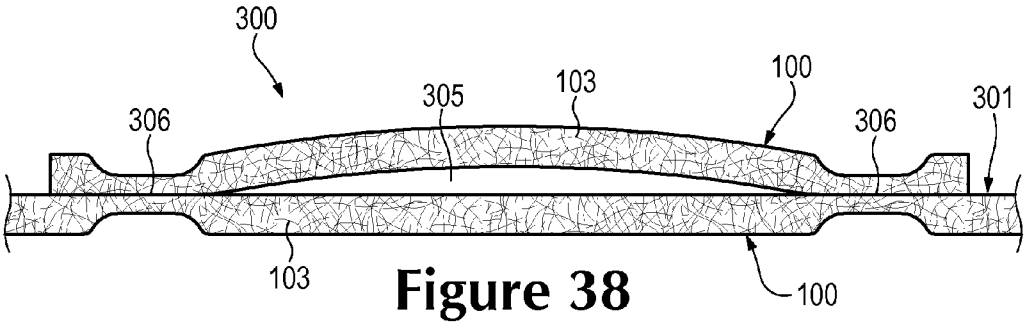

Figure 38

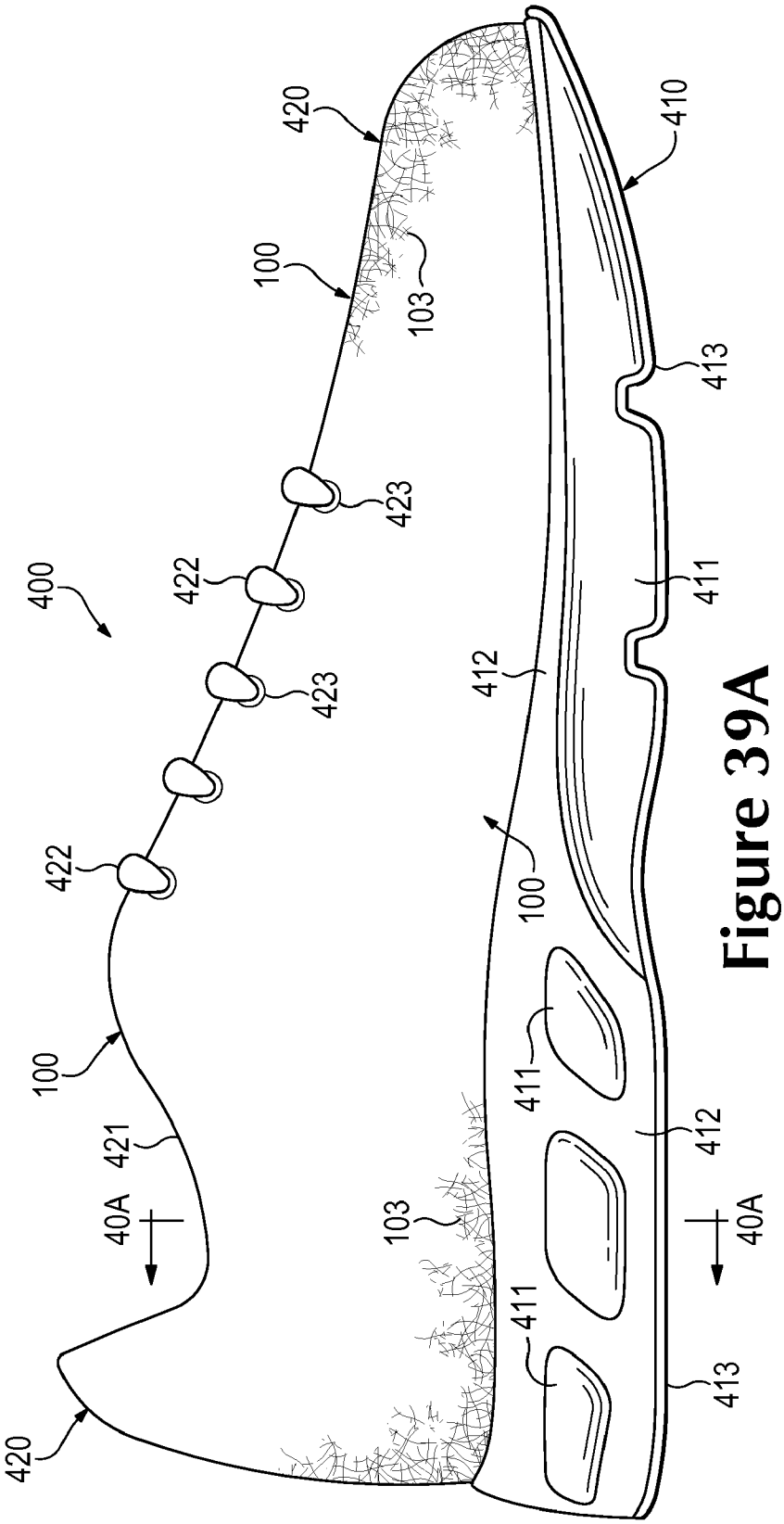

Figure 39A

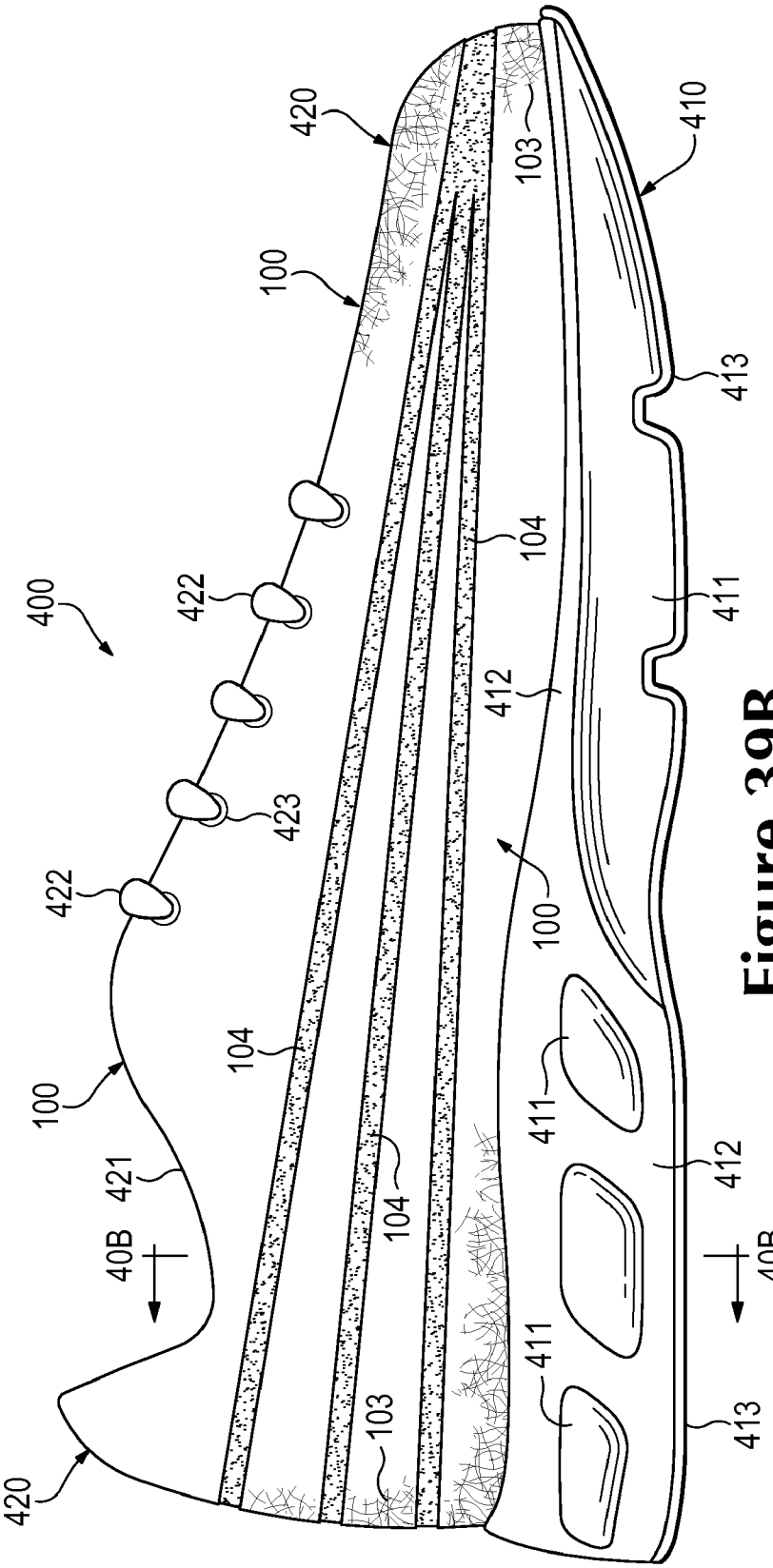

Figure 39B

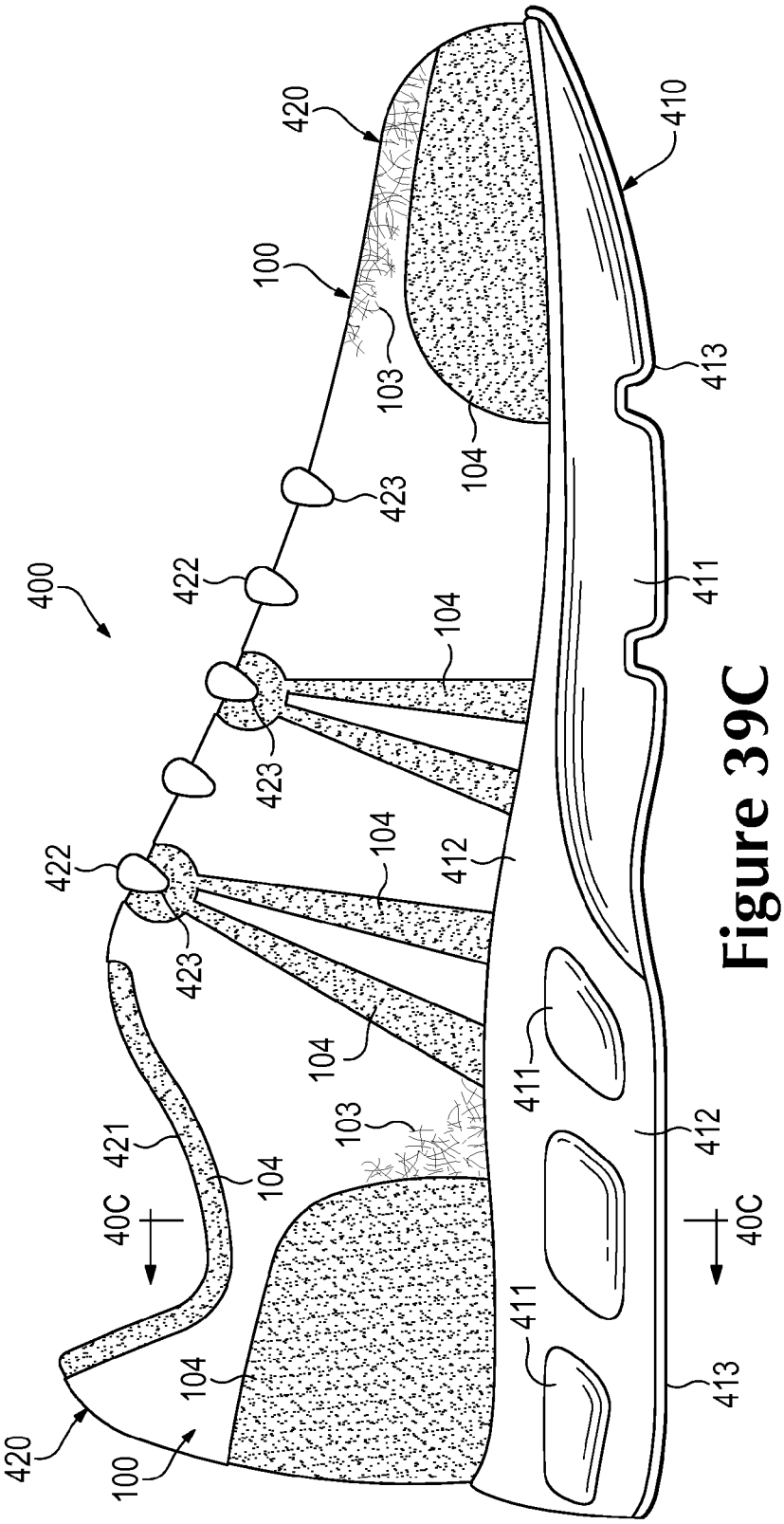

Figure 39C

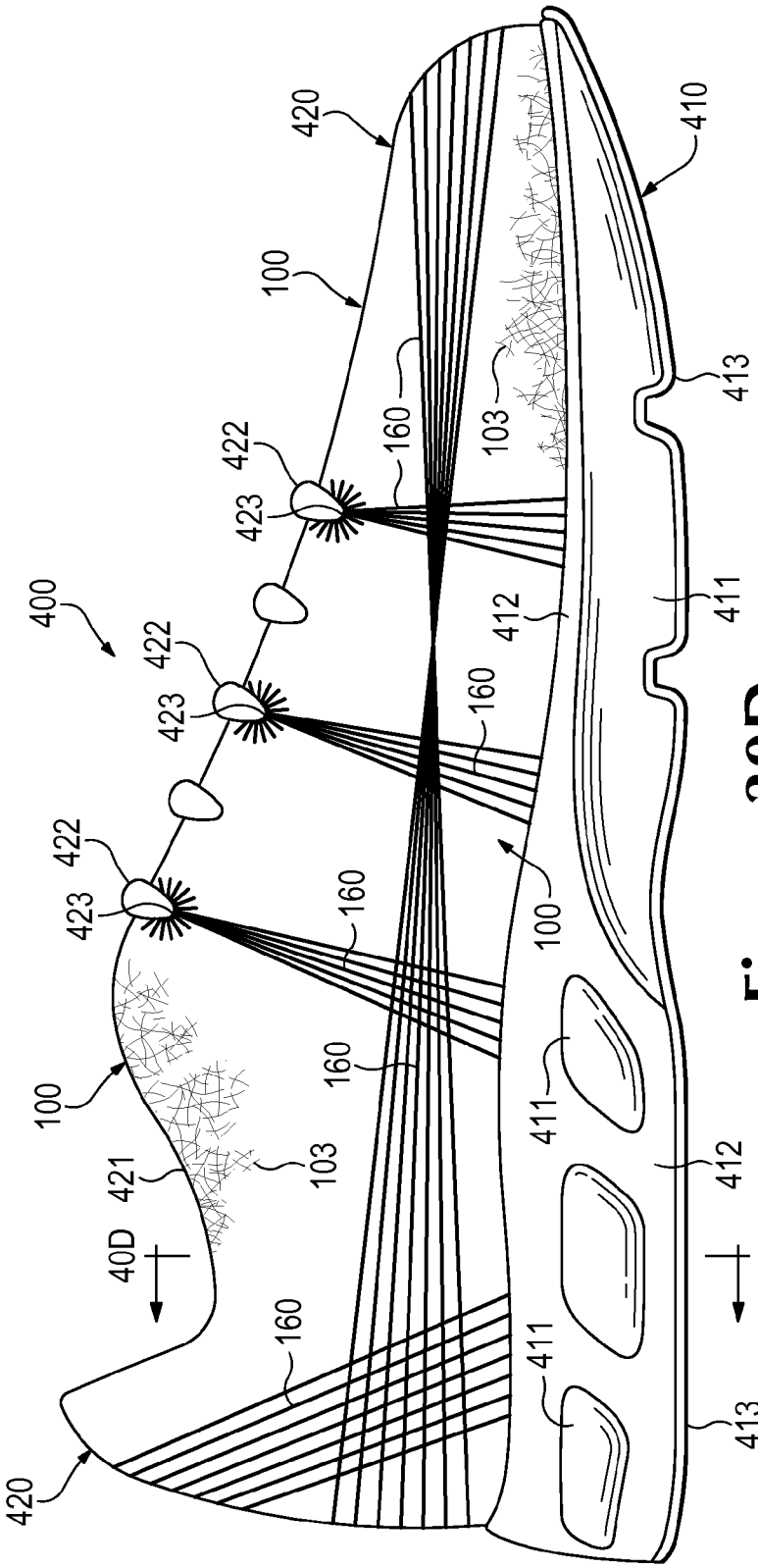

Figure 39D

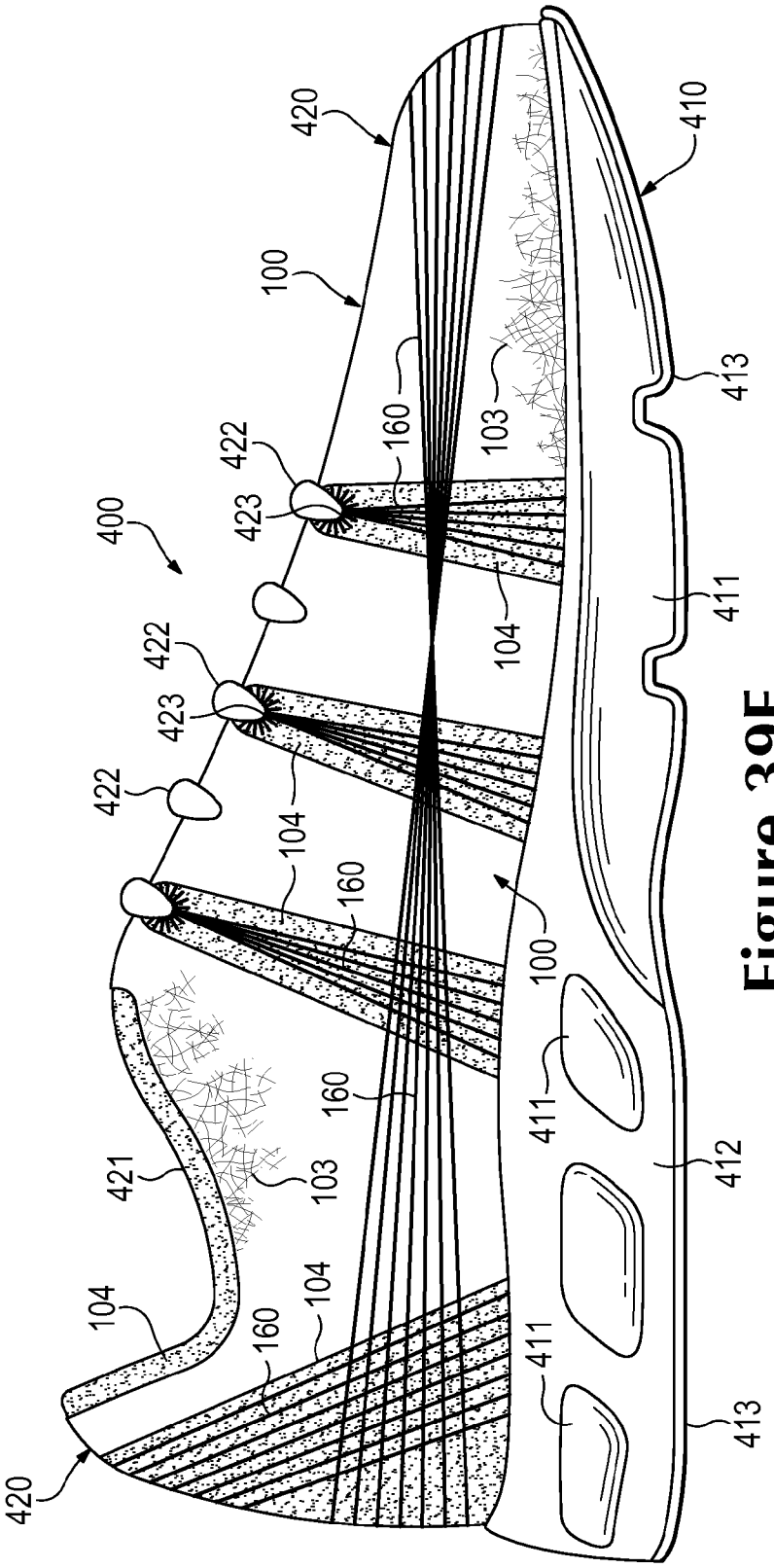

Figure 39E

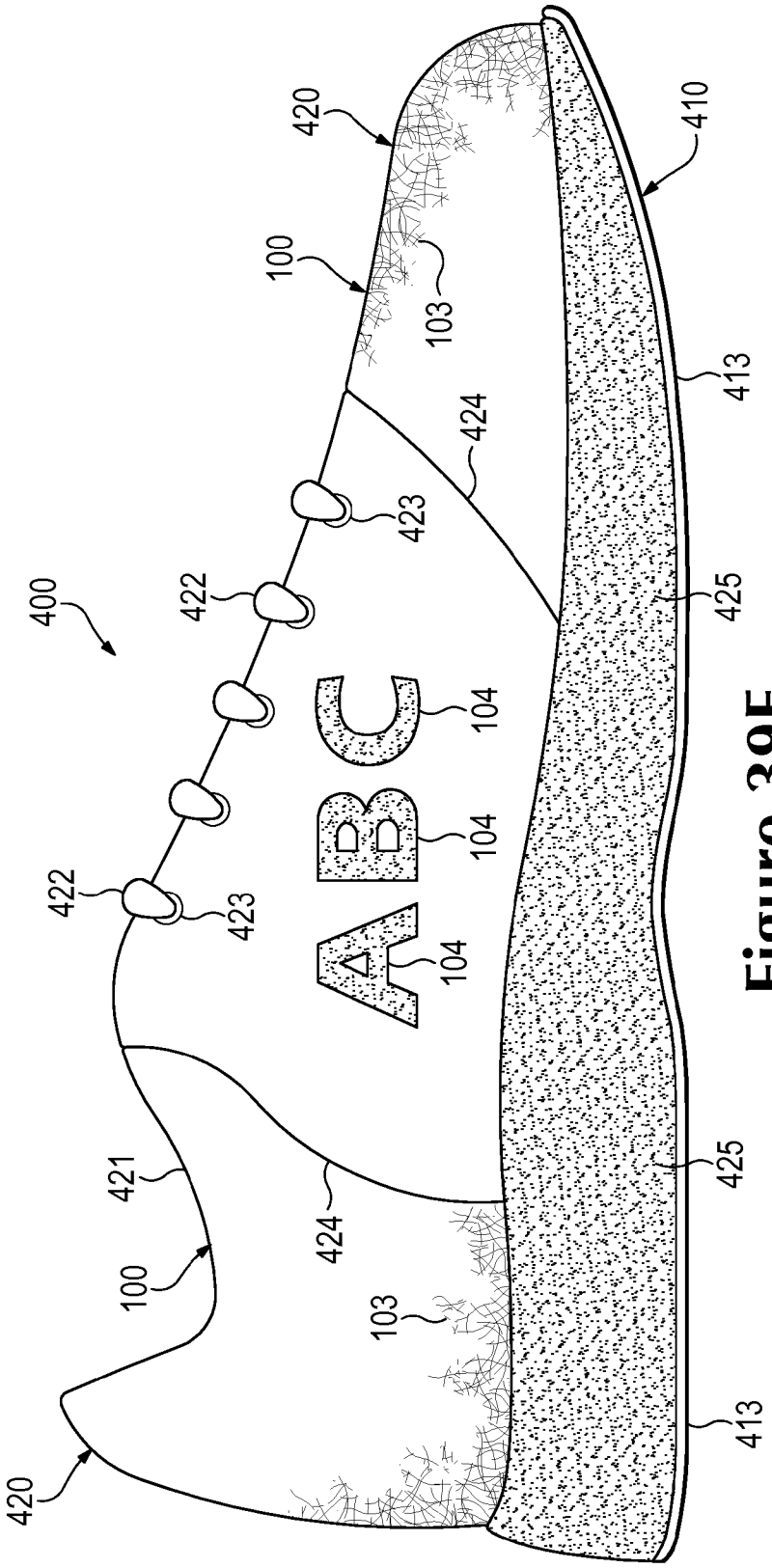

Figure 39F

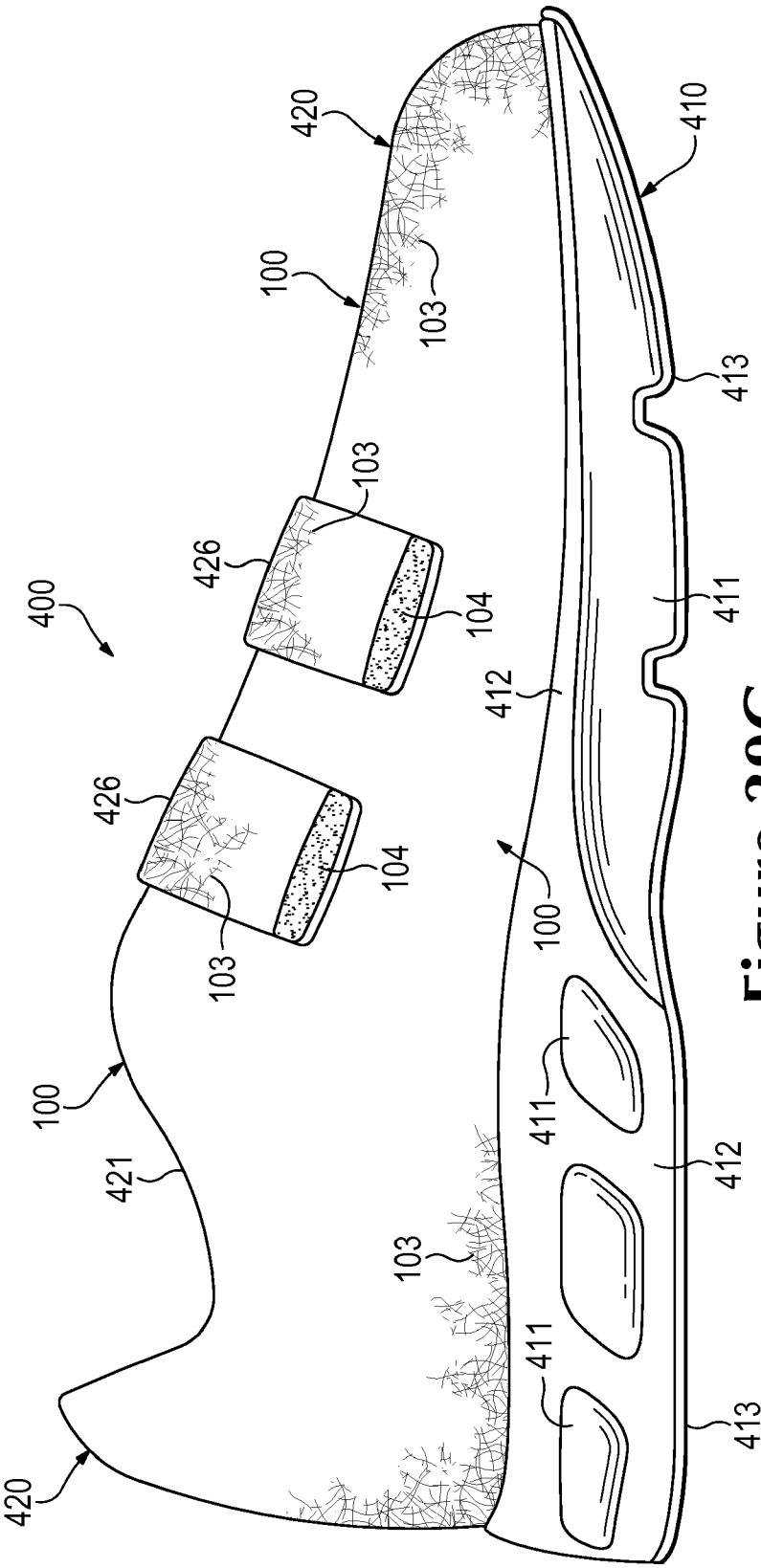

Figure 39G

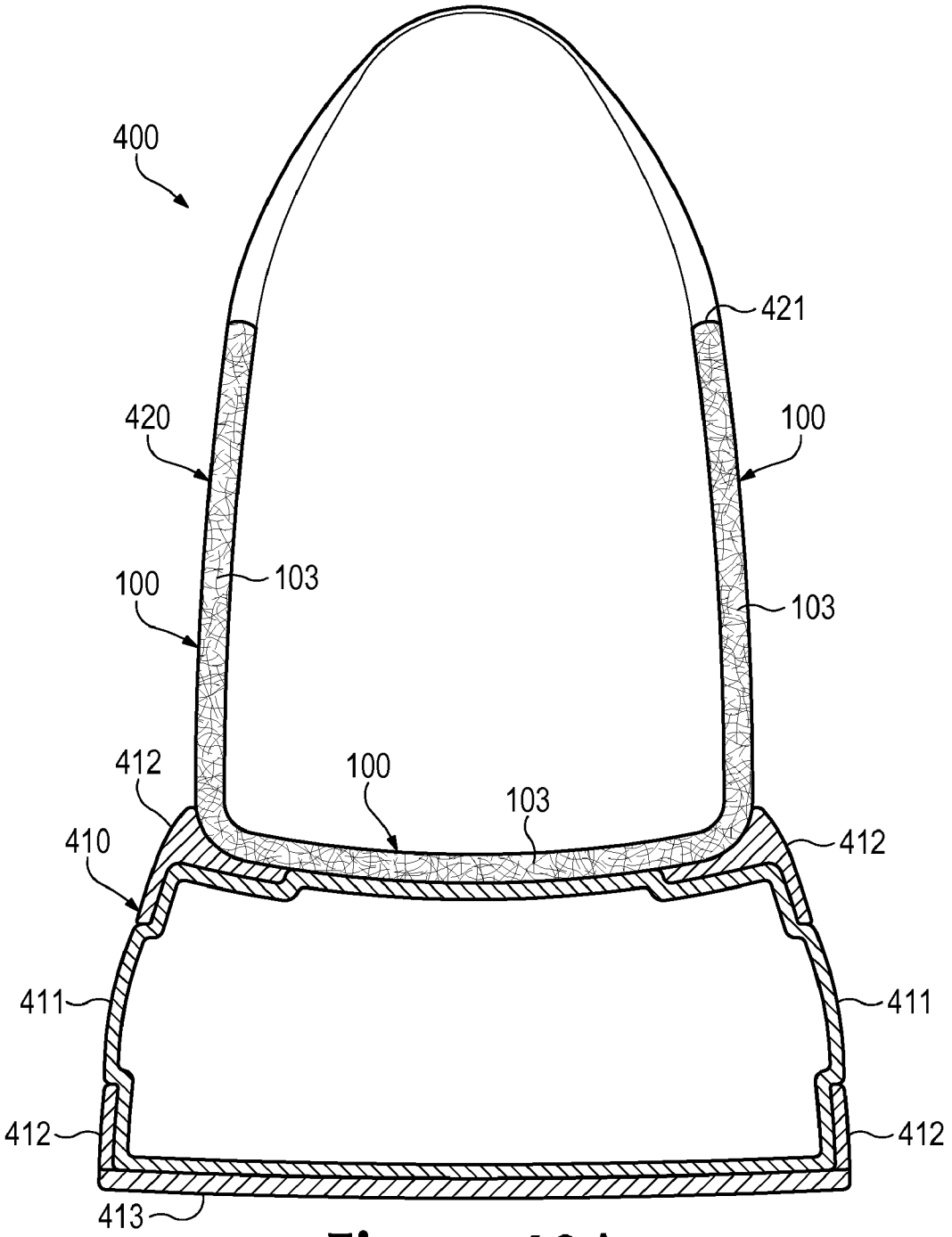
400
421
420
100
100
103
103
412
100
103
410
412
411
411
412
412
413

Figure 40A

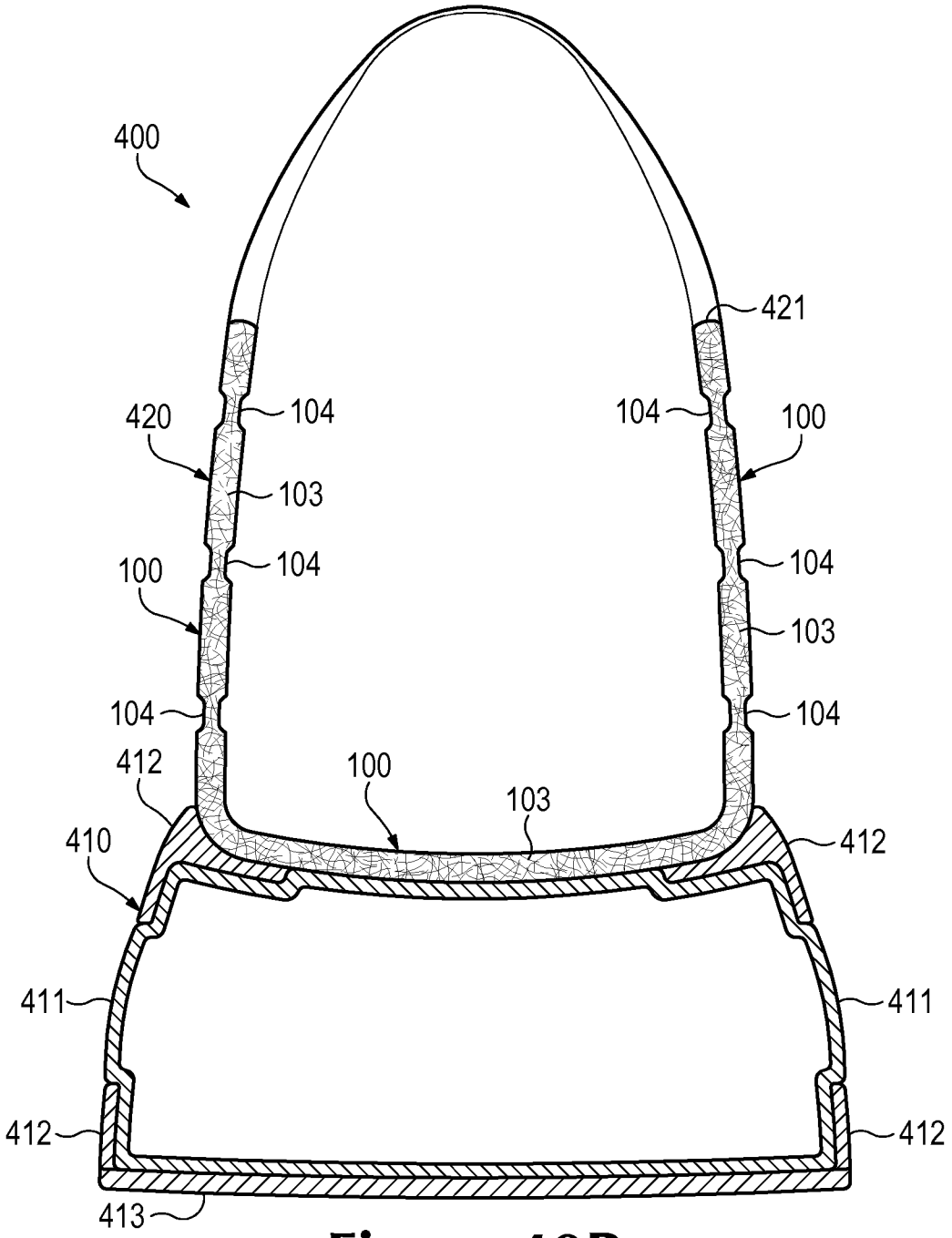
400
421
420
104
104
100
103
100
104
104
103
104
104
412
100
103
410
412
411
411
412
412
413

Figure 40B

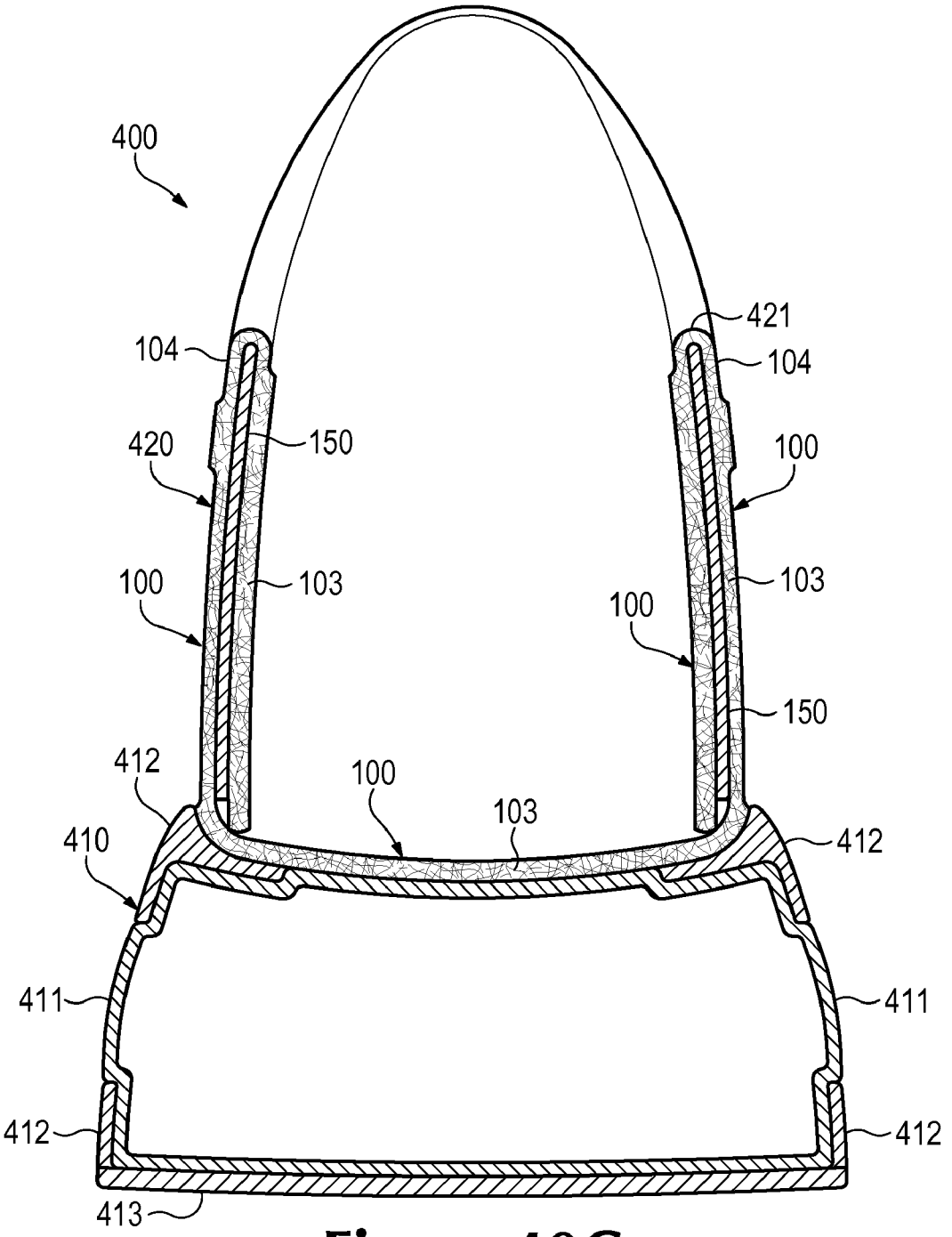
400
421
104
104
420
150
100
100
103
103
100
100
150
412
100
103
410
412
411
411
412
412
413

Figure 40C

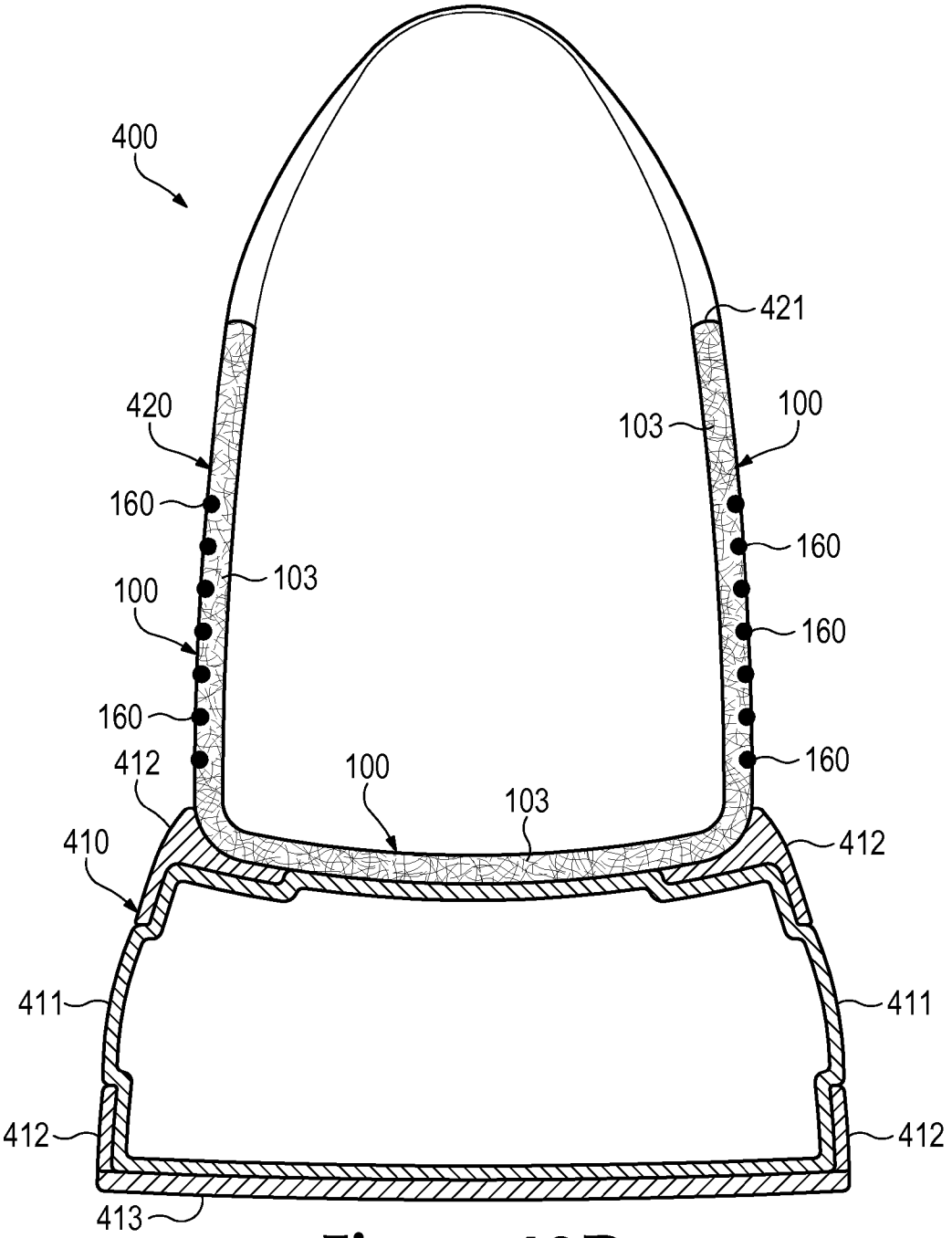
400
421
420
103
100
160
160
103
100
160
160
412
100
160
103
410
412
411
411
412
412
413

Figure 40D

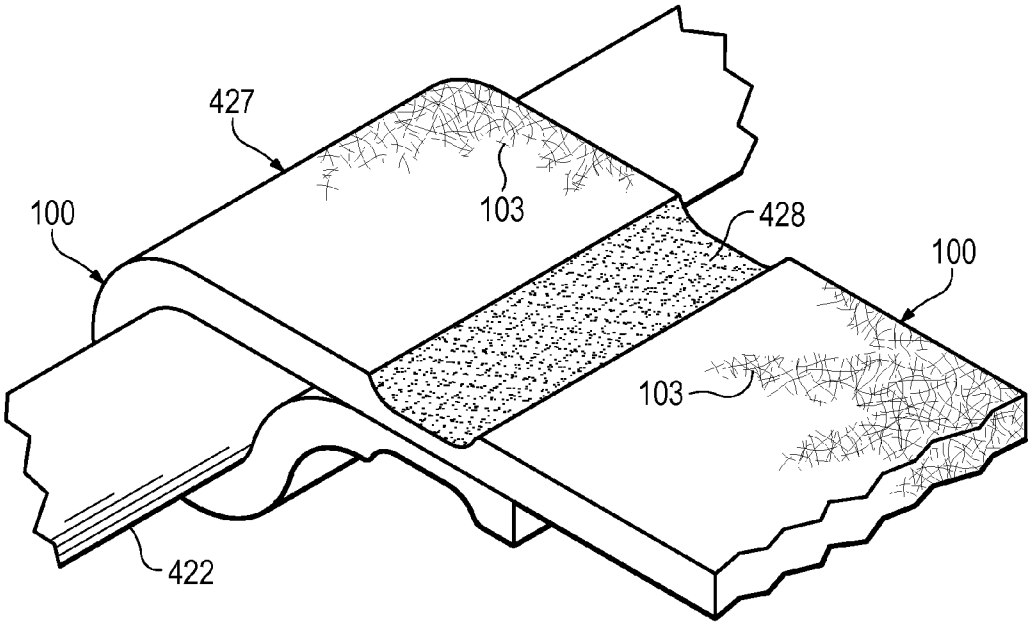

Figure 41

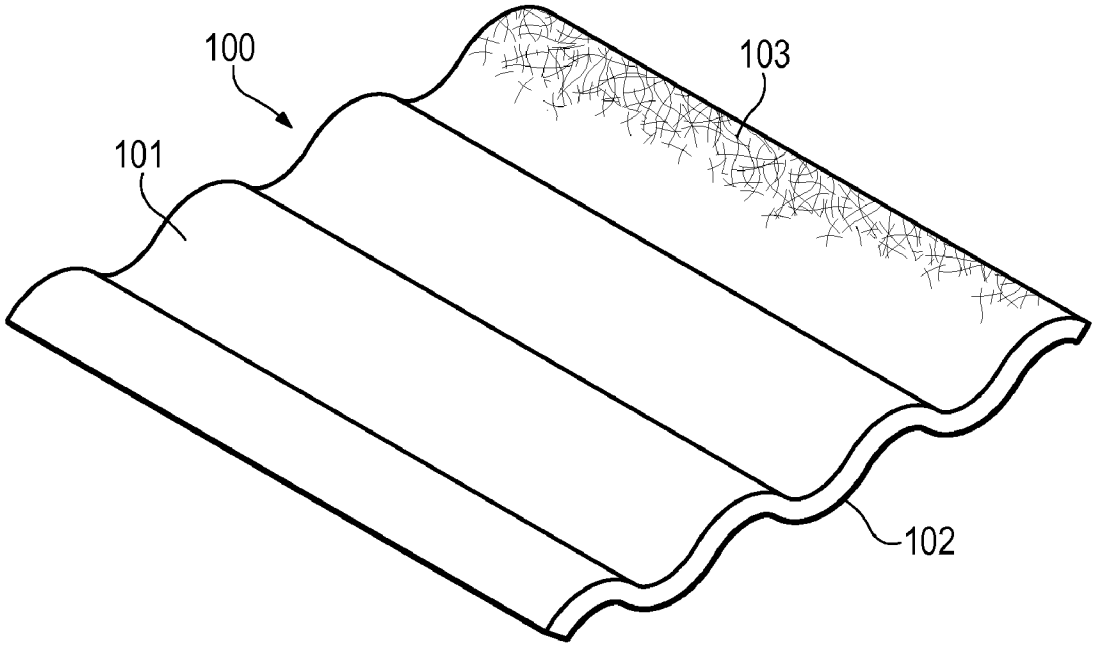

Figure 42A

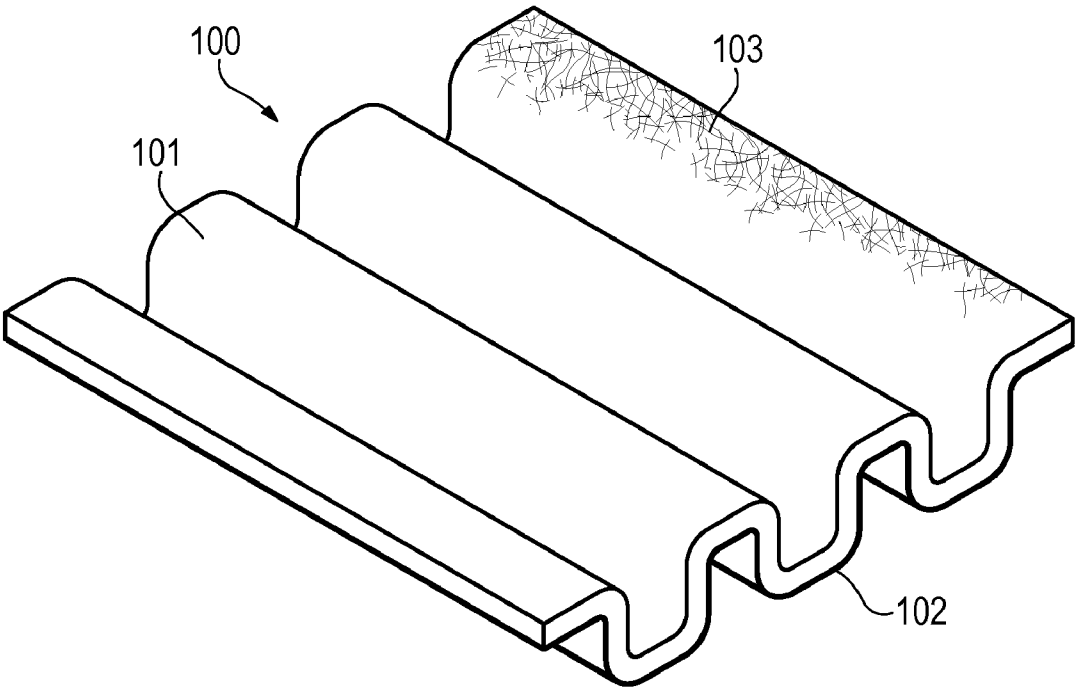

Figure 42B

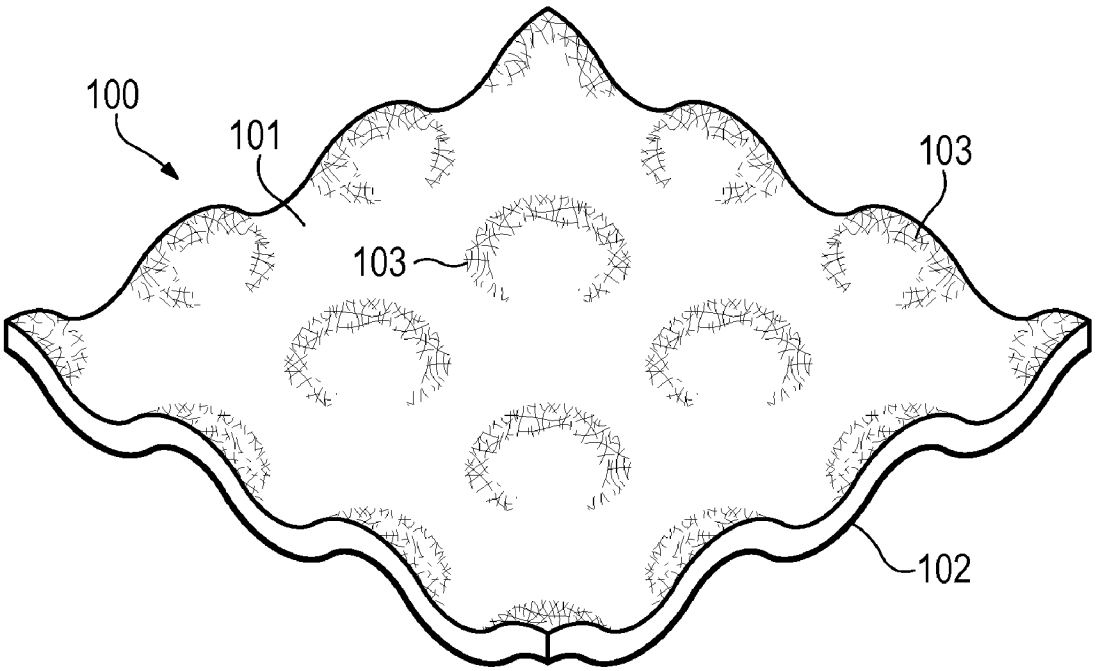

Figure 42C

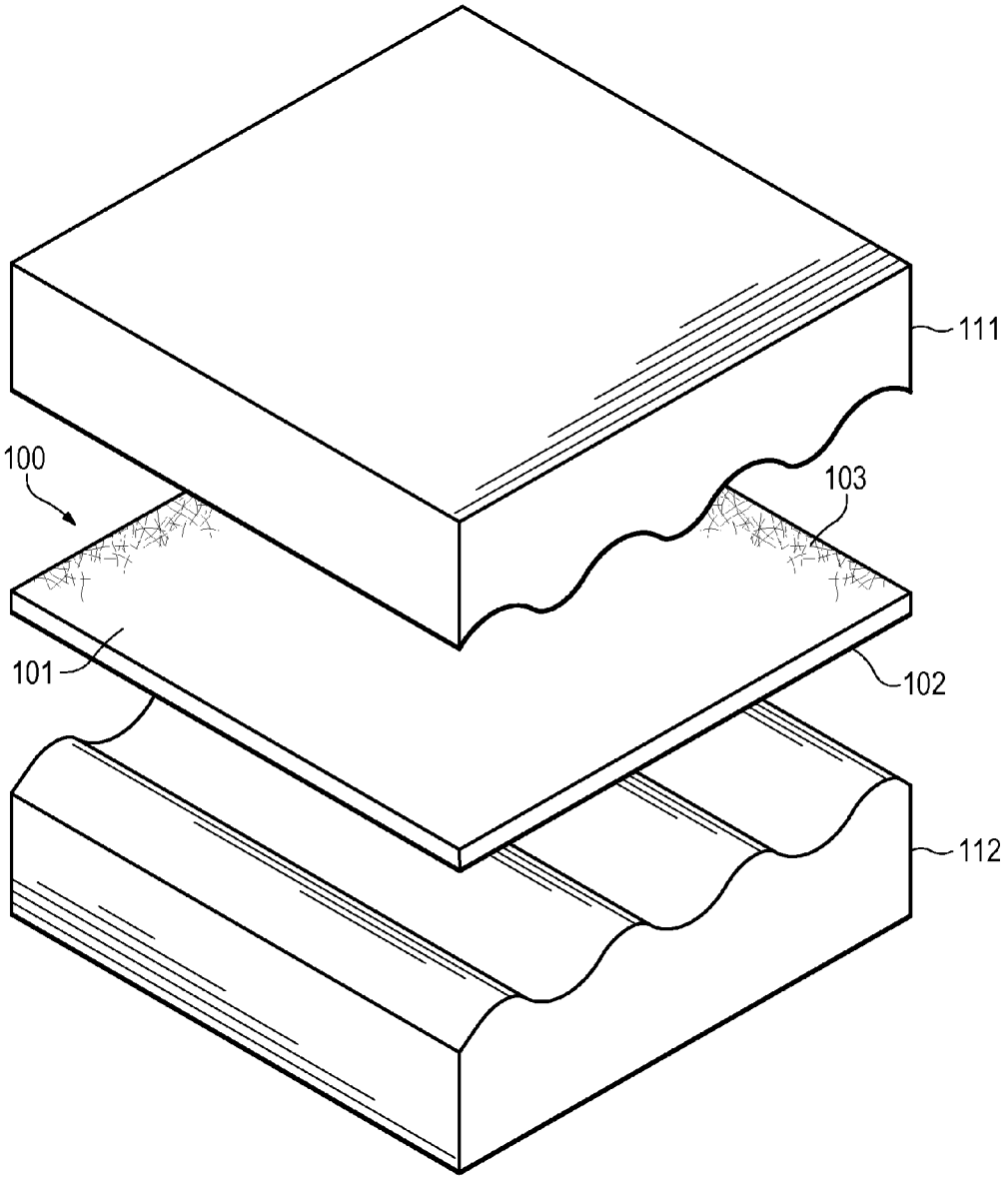

Figure 43A

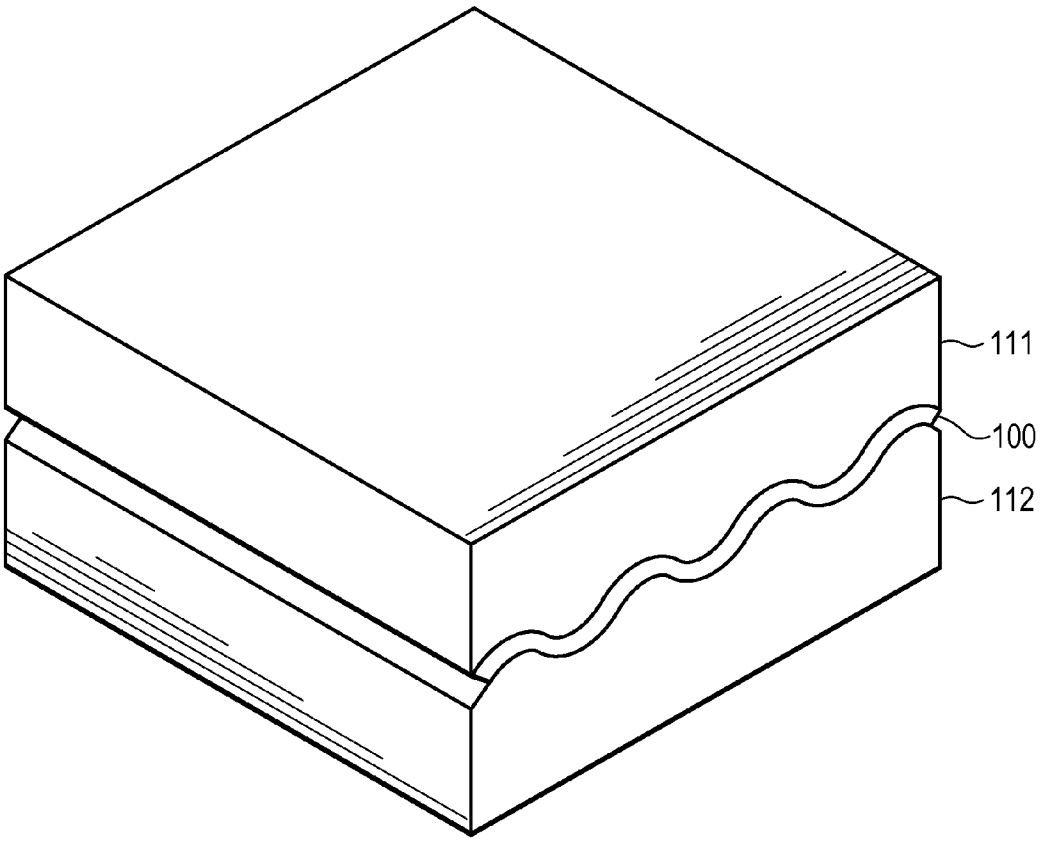

Figure 43B

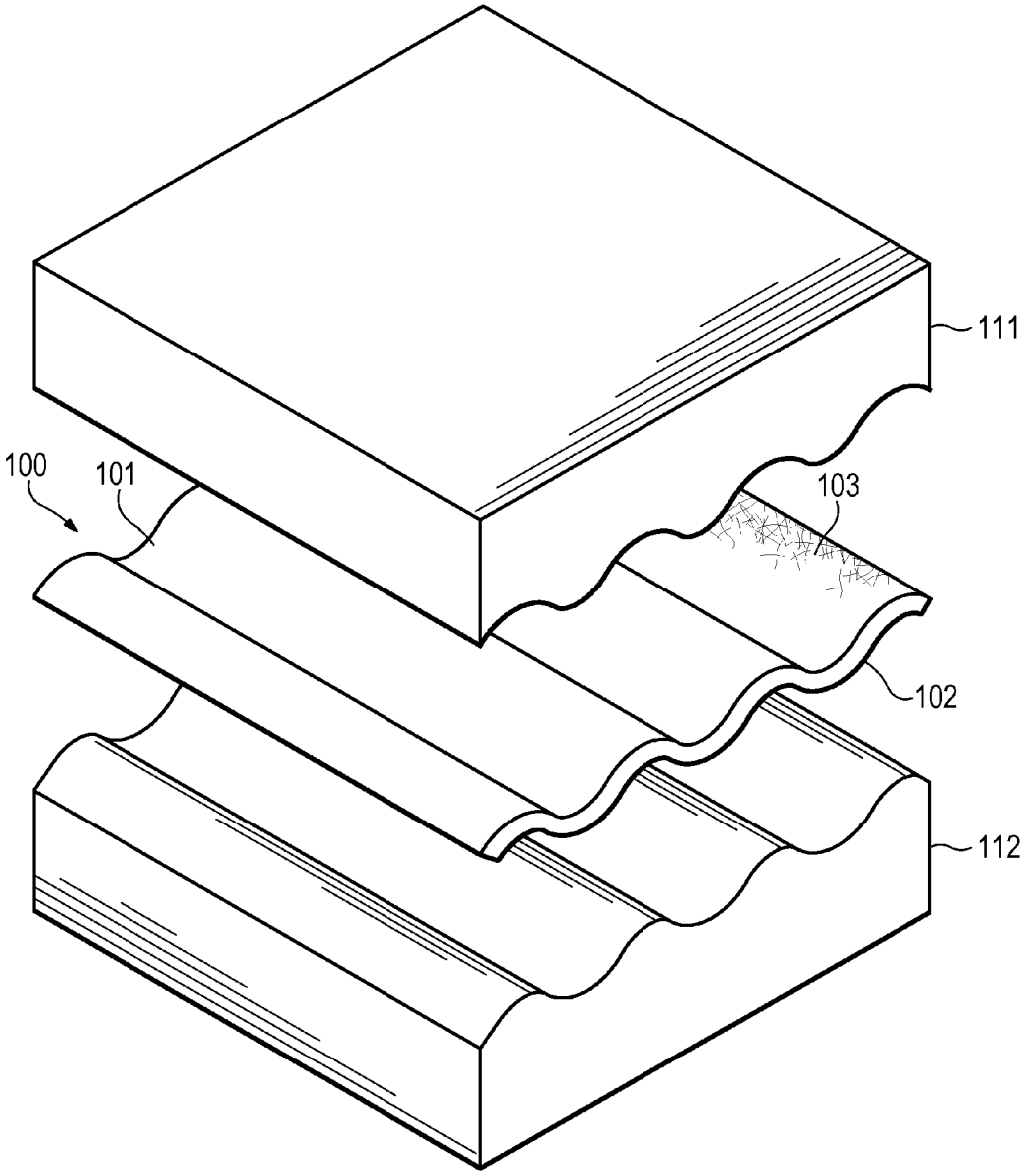

Figure 43C

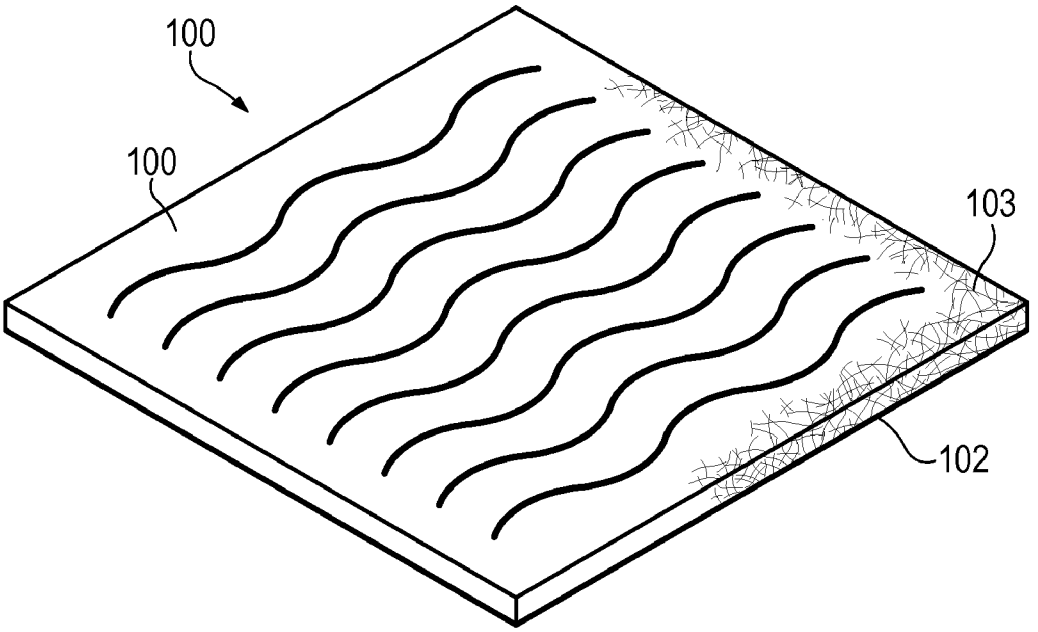

Figure 44A

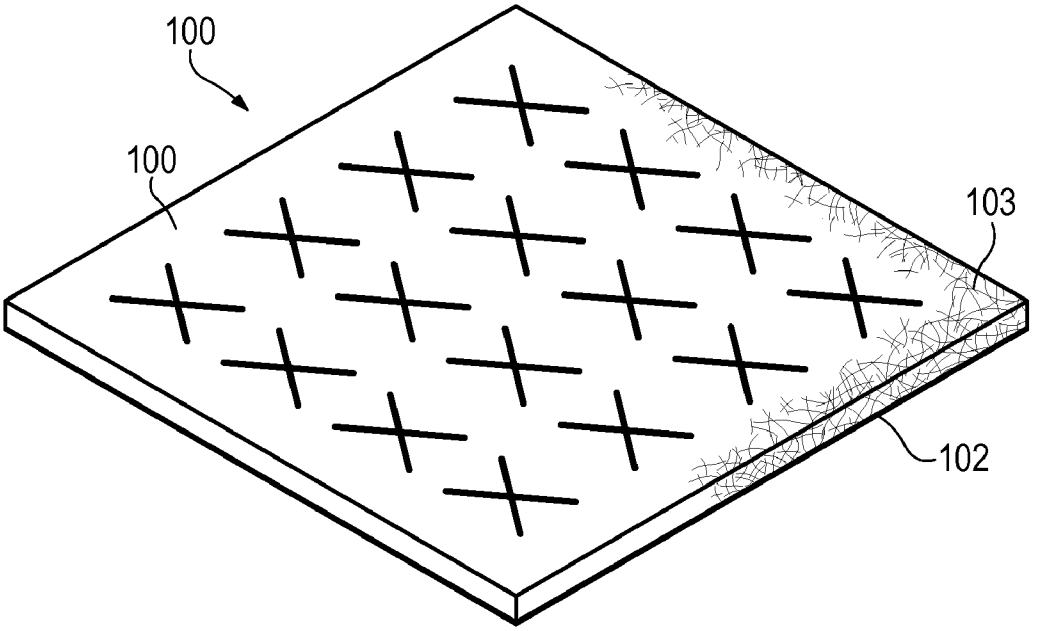

Figure 44B

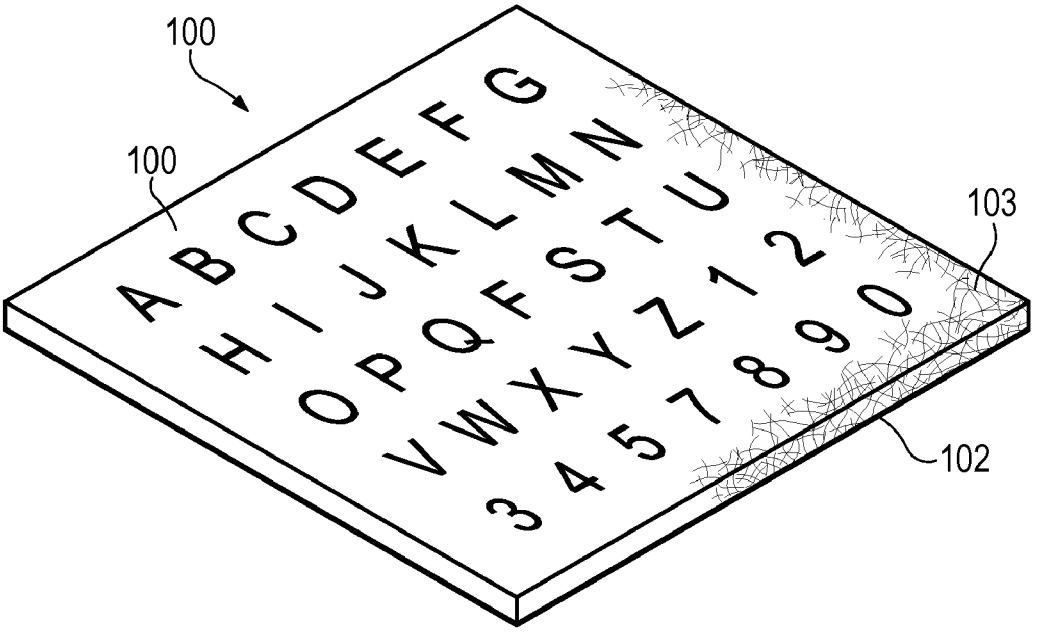

Figure 44C

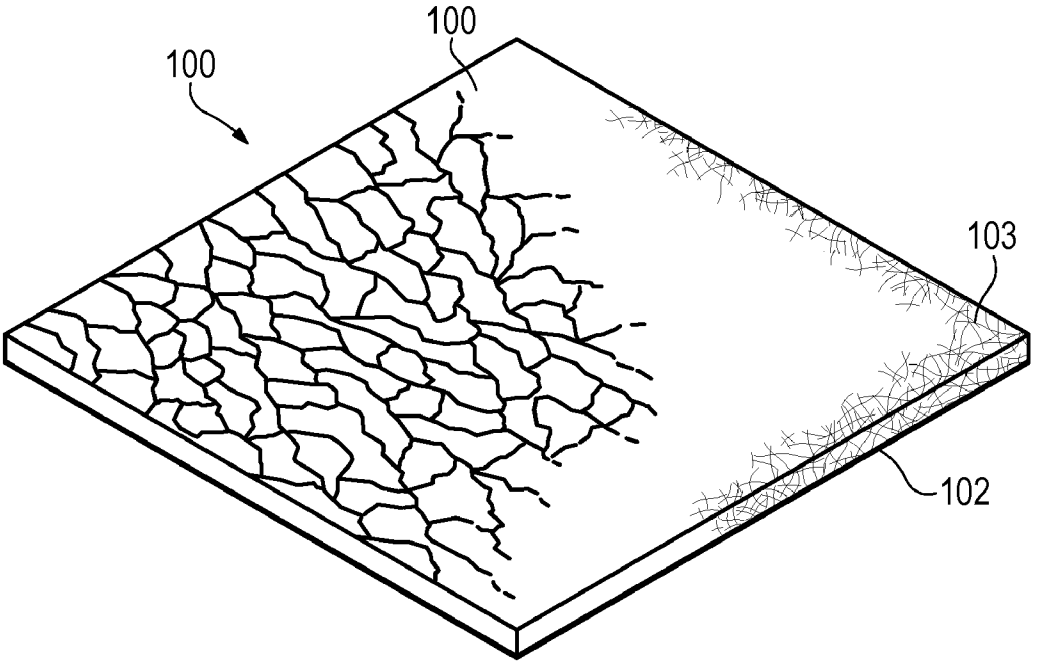

Figure 44D

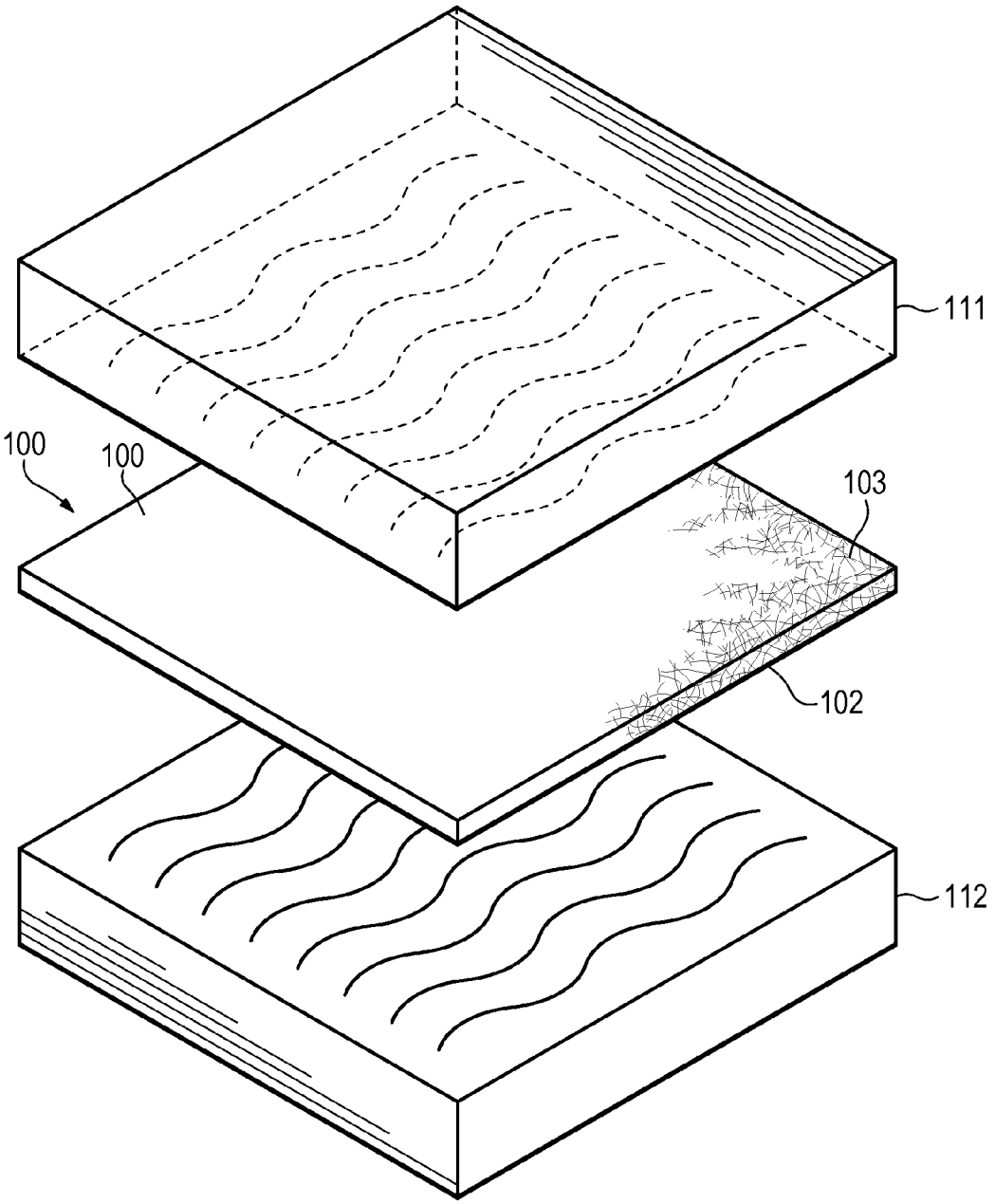

Figure 45A

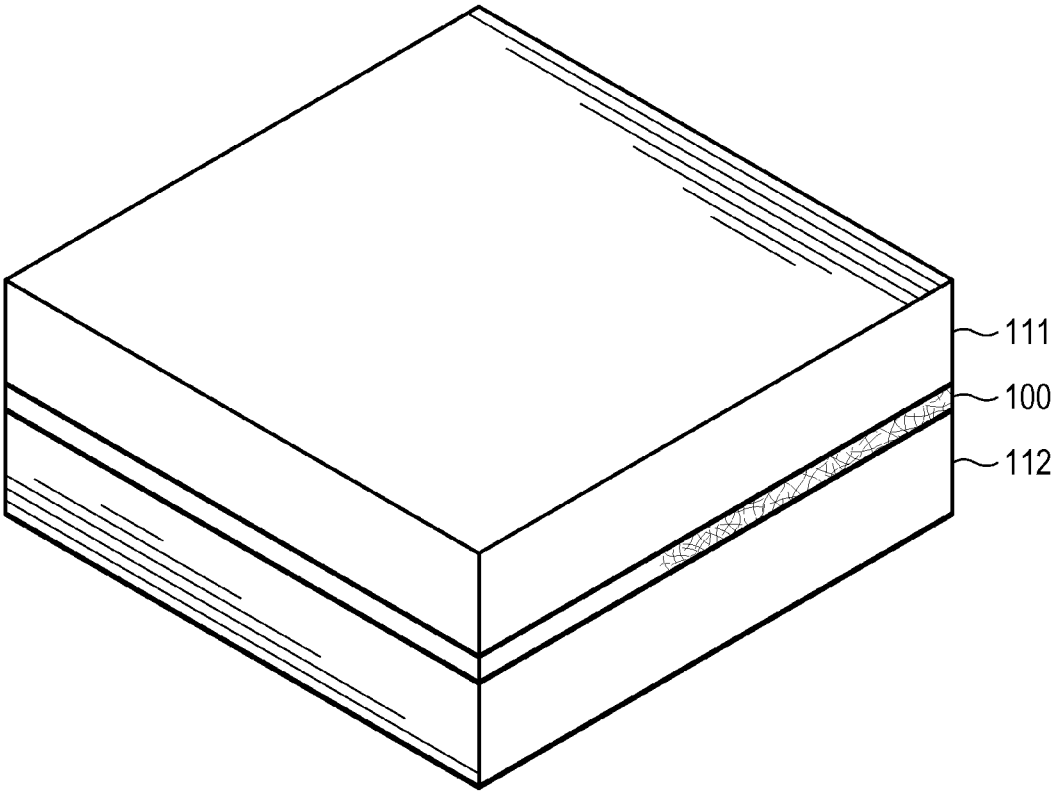

Figure 45B

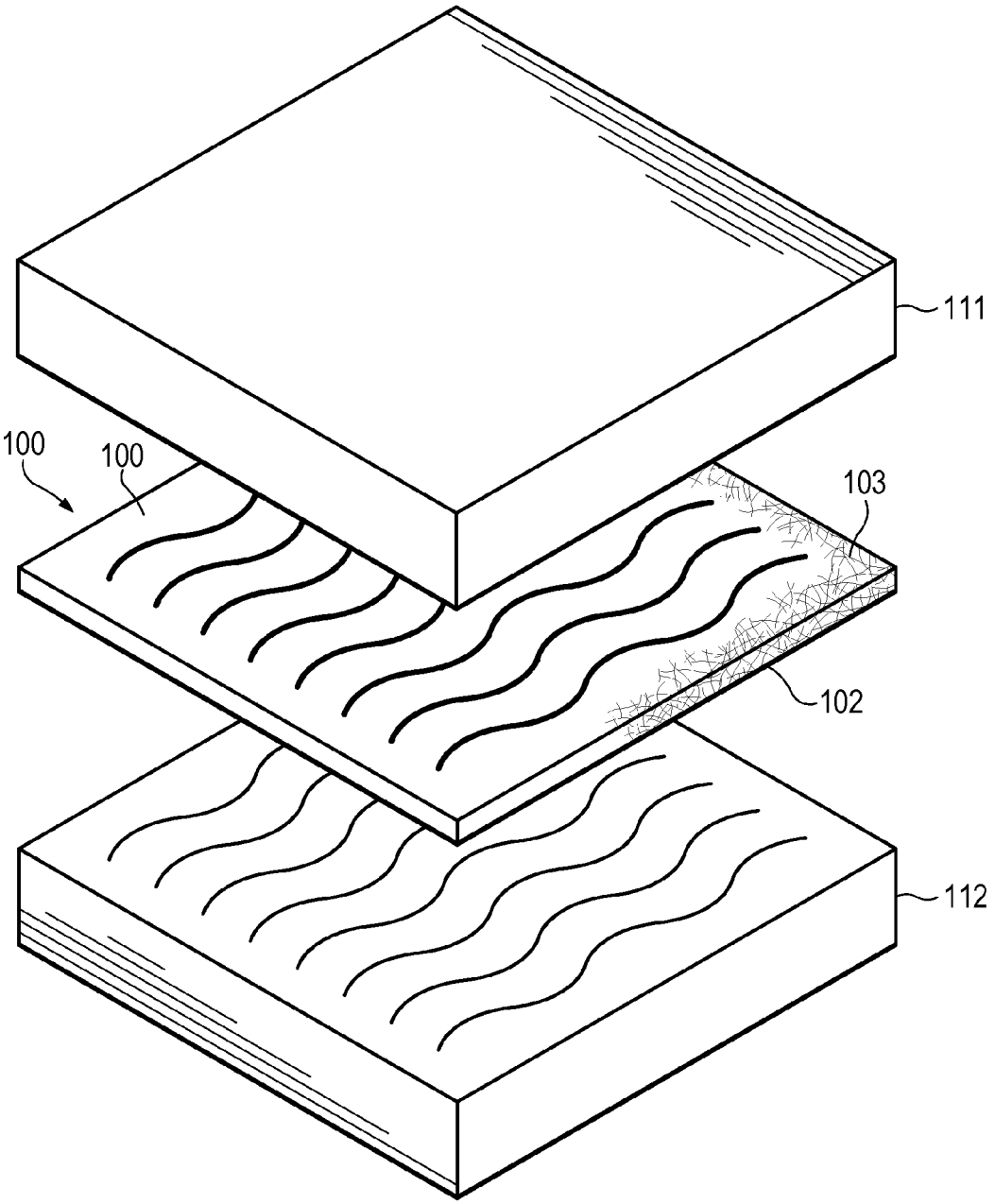

Figure 45C

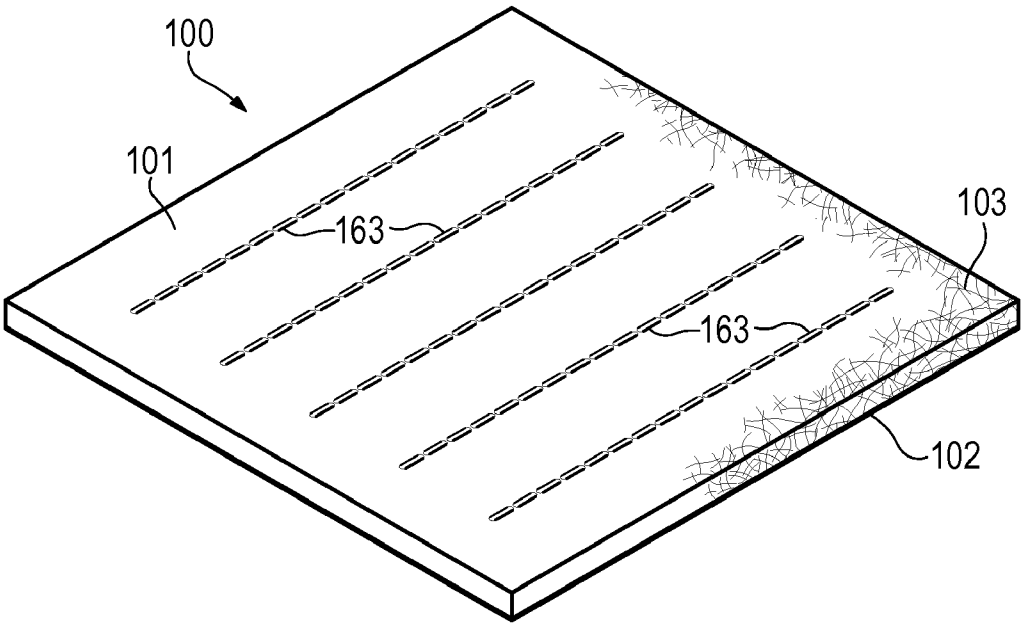

Figure 46A

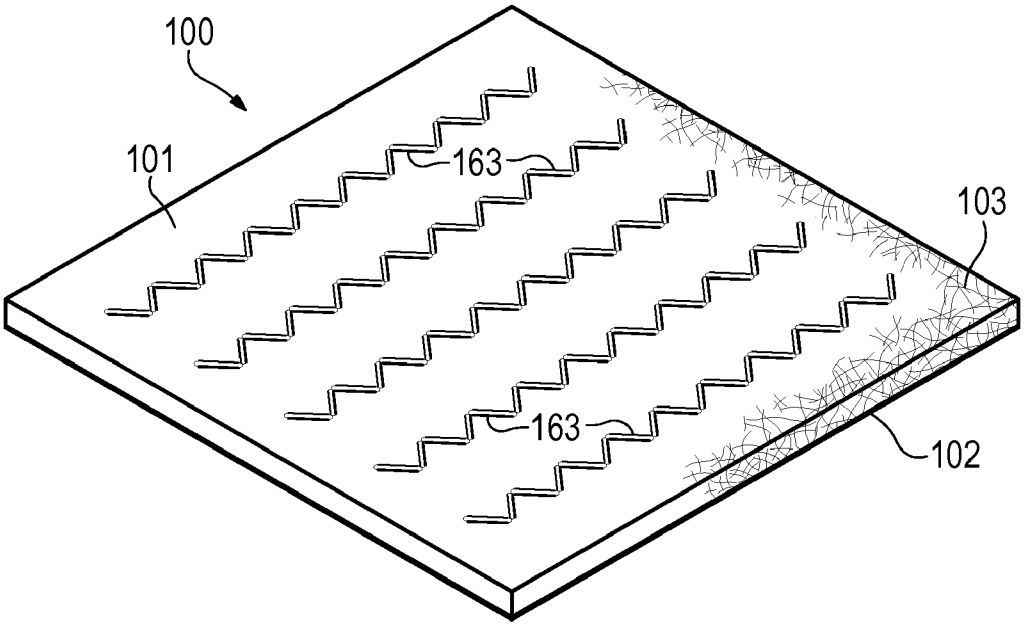

Figure 46B

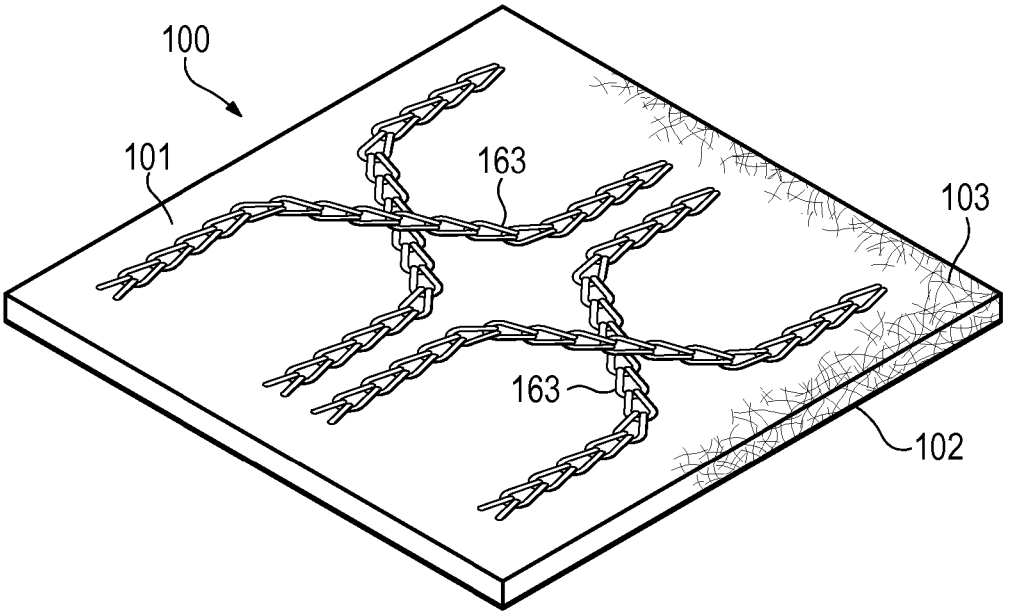

Figure 46C

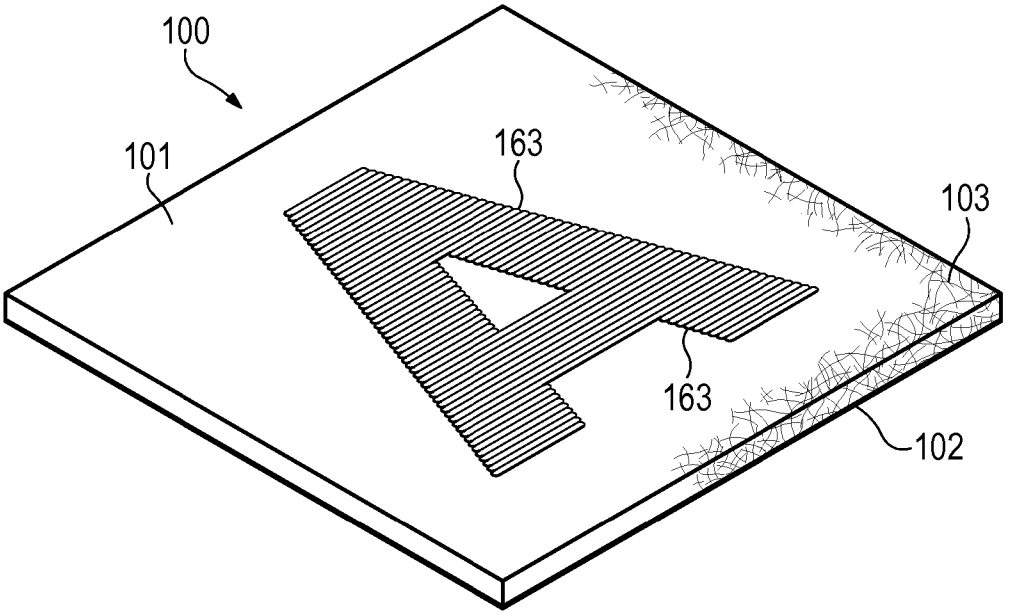

Figure 46D

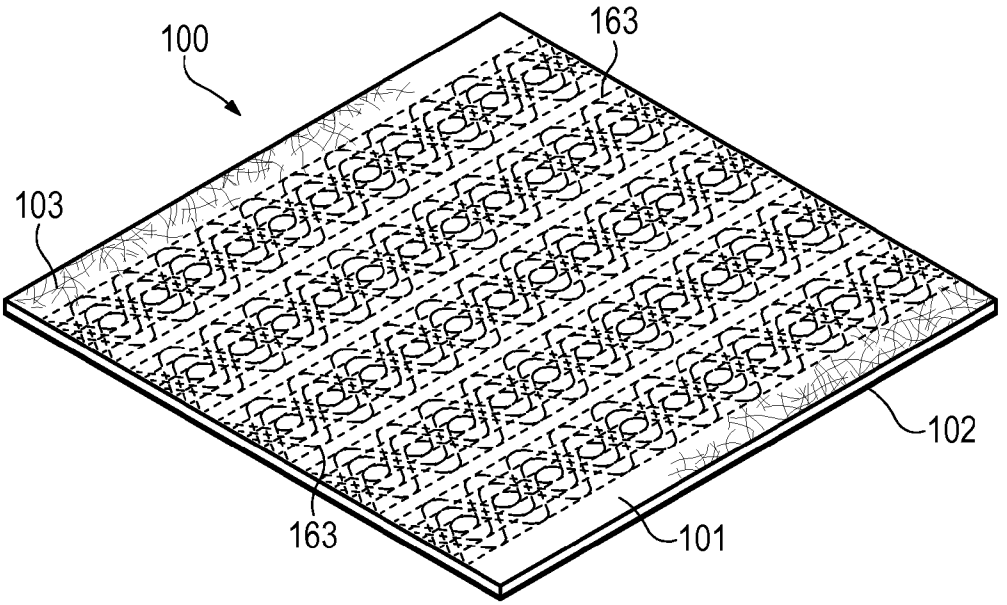

Figure 46E

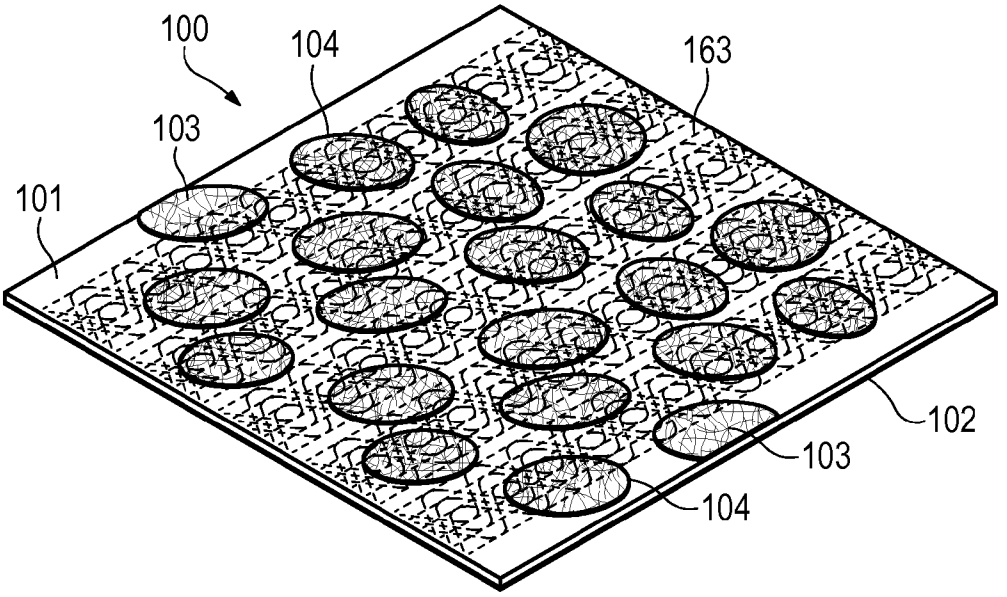

Figure 46F

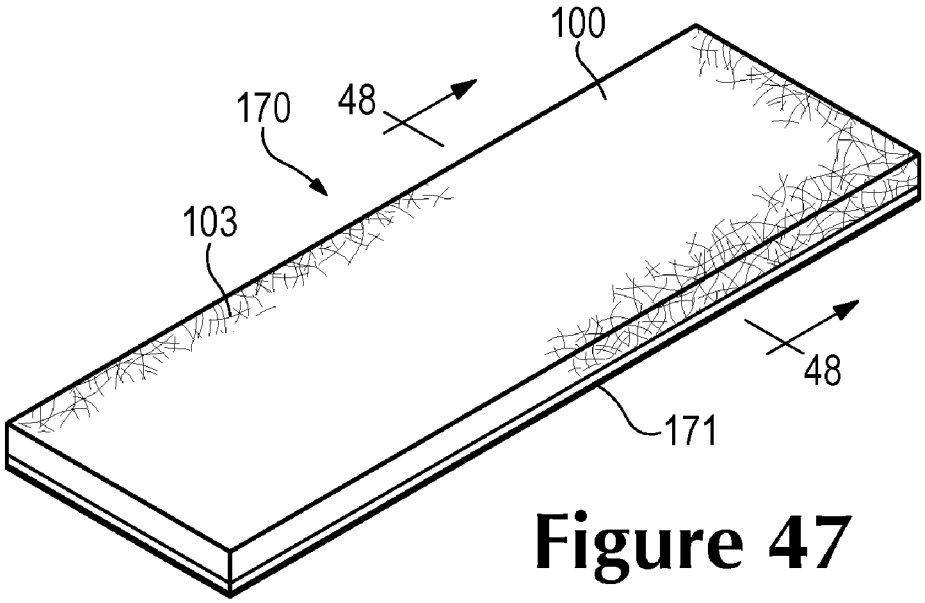

Figure 47

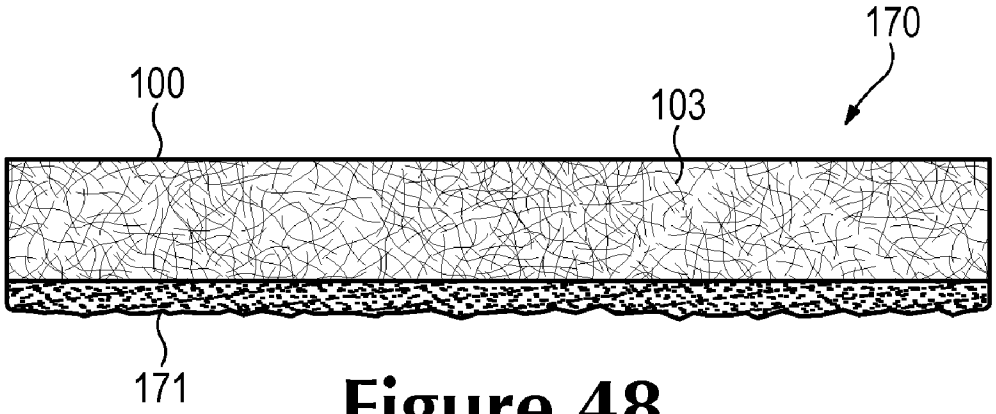

Figure 48

Figure 49A

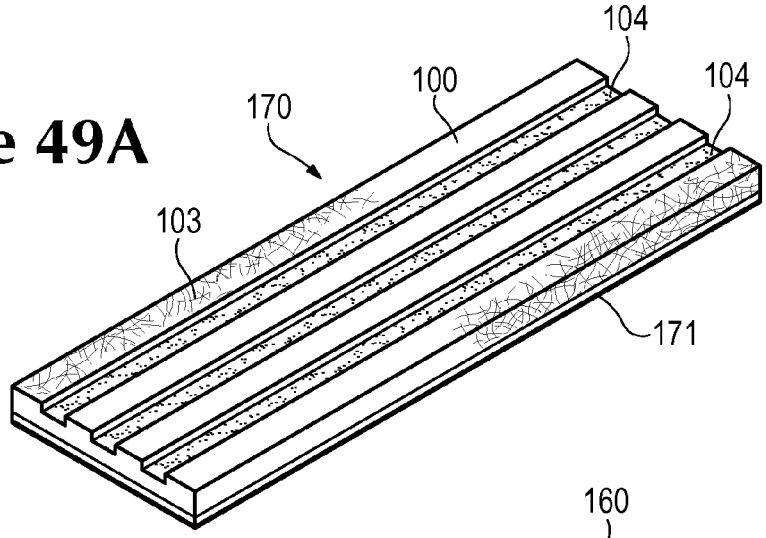

Figure 49B

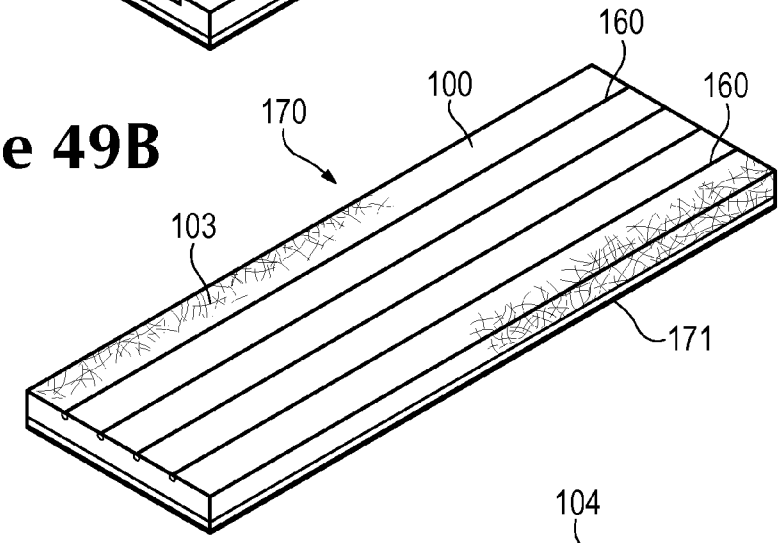

Figure 49C

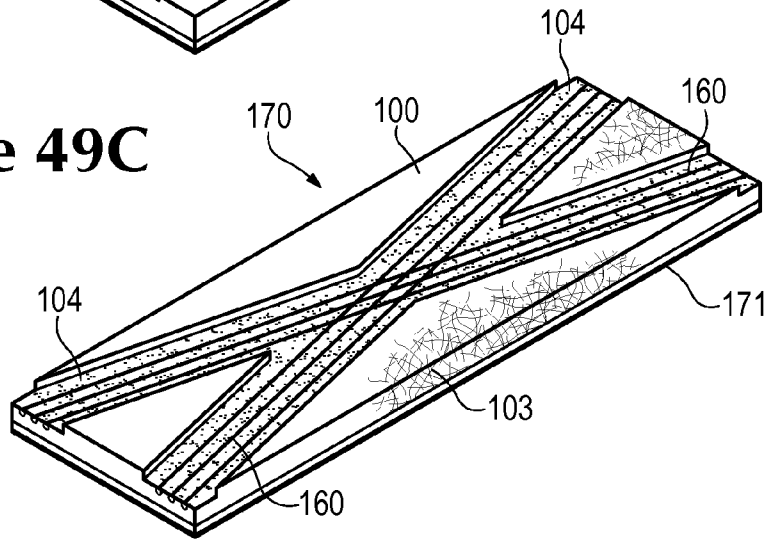

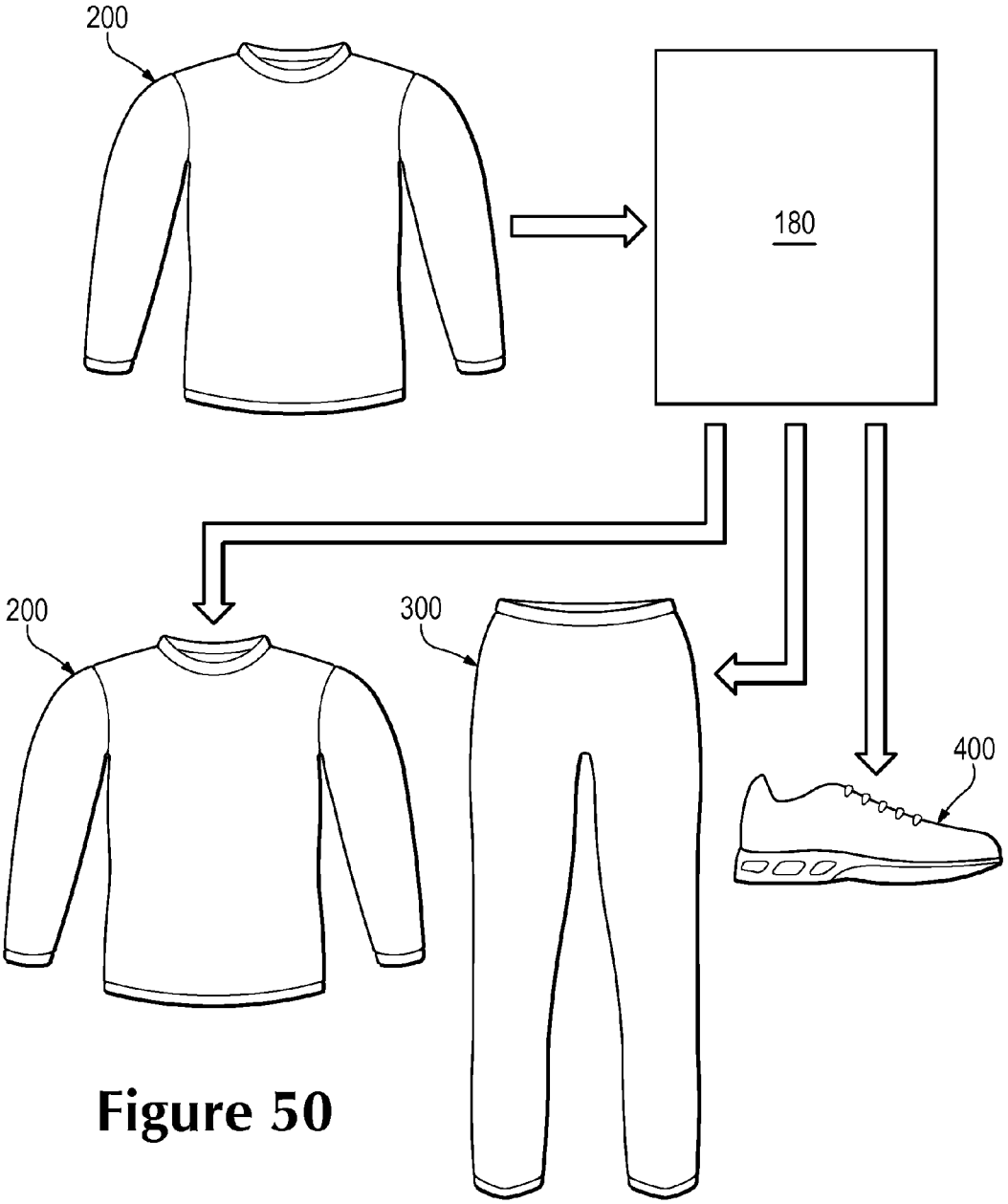

Figure 50

THERMOPLASTIC NON-WOVEN TEXTILE ELEMENTS

CROSS-REFERENCE TO RELATED APPLICATION

[0001] This application is a divisional of and claims priority under 35 U.S.C. 121 to U.S. patent application Ser. No. 12/367,274, which was filed in the U.S. Patent and Trademark Office on 6 Feb. 2009 and entitled Thermoplastic Non-Woven Textile Elements, such prior U.S. patent application being entirely incorporated herein by reference.

BACKGROUND

[0002] A variety of products are at least partially formed from textiles. As examples, articles of apparel (e.g., shirts, pants, socks, jackets, undergarments, footwear), containers (e.g., backpacks, bags), and upholstery for furniture (e.g., chairs, couches, car seats) are often formed from various textile elements that are joined through stitching or adhesive bonding. Textiles may also be utilized in bed coverings (e.g., sheets, blankets), table coverings, towels, flags, tents, sails, and parachutes. Textiles utilized for industrial purposes are commonly referred to as technical textiles and may include structures for automotive and aerospace applications, filter materials, medical textiles (e.g. bandages, swabs, implants), geotextiles for reinforcing embankments, agrotextiles for crop protection, and industrial apparel that protects or insulates against heat and radiation. Accordingly, textiles may be incorporated into a variety of products for both personal and industrial purposes.

[0003] Textiles may be defined as any manufacture from fibers, filaments, or yarns having a generally two-dimensional structure (i.e., a length and a width that are substantially greater than a thickness). In general, textiles may be classified as mechanically-manipulated textiles or non-woven textiles. Mechanically-manipulated textiles are often formed by weaving or interlooping (e.g., knitting) a yarn or a plurality of yarns, usually through a mechanical process involving looms or knitting machines. Non-woven textiles are webs or mats of filaments that are bonded, fused, interlocked, or otherwise joined. As an example, a non-woven textile may be formed by randomly depositing a plurality of polymer filaments upon a surface, such as a moving conveyor. Various embossing or calendaring processes may also be utilized to ensure that the non-woven textile has a substantially constant thickness, impart texture to one or both surfaces of the non-woven textile, or further bond or fuse filaments within the non-woven textile to each other. Whereas spunbonded non-woven textiles are formed from filaments having a cross-sectional thickness of 10 to 100 microns, melt-blown non-woven textiles are formed from filaments having a cross-sectional thickness of less than 10 microns.

[0004] Although some products are formed from one type of textile, many products may also be formed from two or more types of textiles in order to impart different properties to different areas. As an example, shoulder and elbow areas of a shirt may be formed from a textile that imparts durability (e.g., abrasion-resistance) and stretch-resistance, whereas other areas may be formed from a textile that imparts breathability, comfort, stretch, and moisture-absorption. As another example, an upper for an article of footwear may have a structure that includes numerous layers formed from various types of textiles and other materials (e.g., polymer foam, leather, synthetic leather), and some of the layers may also have areas formed from different types of textiles to impart different properties. As yet another example, straps of a backpack may be formed from non-stretch textile elements, lower areas of a backpack may be formed from durable and water-resistant textile elements, and a remainder of the backpack may be formed from comfortable and compliant textile elements. Accordingly, many products may incorporate various types of textiles in order to impart different properties to different portions of the products.

[0005] In order to impart the different properties to different areas of a product, textile elements formed from the materials must be cut to desired shapes and then joined together, usually with stitching or adhesive bonding. As the number and types of textile elements incorporated into a product increases, the time and expense associated with transporting, stocking, cutting, and joining the textile elements may also increase. Waste material from cutting and stitching processes also accumulates to a greater degree as the number and types of textile elements incorporated into a product increases. Moreover, products with a greater number of textile elements and other materials may be more difficult to recycle than products formed from few elements and materials. By decreasing the number of elements and materials utilized in a product, therefore, waste may be decreased while increasing the manufacturing efficiency and recyclability.

SUMMARY

[0006] A non-woven textile and products incorporating the non-woven textile are disclosed below. The non-woven textile may be formed from a plurality of filaments that are at least partially formed from a thermoplastic polymer material. In some configurations of the non-woven textile, the filaments or the thermoplastic polymer material may be elastomeric or may stretch at least one-hundred percent prior to tensile failure.

[0007] The non-woven textile may have a first region and a second region, with the filaments of the first region being fused to a greater degree than the filaments of the second region. Depending upon the degree of fusing in the first region, the thermoplastic polymer material from the filaments may remain filamentous, become non-filamentous, or take an intermediate form that is partially filamentous and partially non-filamentous. Fusing within the first region may alter properties such as permeability, durability, and stretch-resistance.

[0008] A variety of products, including apparel (e.g., shirts, pants, footwear), may incorporate the non-woven textile. In some of these products, the non-woven textile may be joined with another textile element or component to form a seam. More particularly, an edge area of the non-woven textile may be heatbonded with an edge area of the other textile element or component at the seam. In other products, a surface the non-woven textile may be joined with another textile element or component (e.g., a polymer sheet, a polymer foam layer, or various strands) to form a composite element.

[0009] The advantages and features of novelty characterizing aspects of the invention are pointed out with particularity in the appended claims. To gain an improved understanding of the advantages and features of novelty, however, reference may be made to the following descriptive matter and accompanying figures that describe and illustrate various configurations and concepts related to the invention.

FIGURE DESCRIPTIONS

[0010] The foregoing Summary and the following Detailed Description will be better understood when read in conjunction with the accompanying figures.

[0011] FIG. **1** is a perspective view of a non-woven textile.

[0012] FIG. **2** is a cross-sectional view of the non-woven textile, as defined by section line **2-2** in FIG. **1**.

[0013] FIG. **3** is a perspective view of the non-woven textile with a plurality of fused regions.

[0014] FIGS. **4**A-**4**C are cross-sectional views, as defined by section line **4-4** in FIG. **3**, depicting different configurations of the fused regions in the non-woven textile.

[0015] FIGS. **5**A-**5**H are perspective views of further configurations of the fused regions in the non-woven textile.

[0016] FIGS. **6**A-**6**F are cross-sectional views corresponding with FIGS. **4**A-**4**C and depicting further configurations of the fused regions in the non-woven textile.

[0017] FIGS. **7**A-**7**C are perspective views of a first process for forming the fused regions in the non-woven textile.

[0018] FIGS. **8**A-**8**C are perspective views of a second process for forming the fused regions in the non-woven textile.

[0019] FIG. **9** is a perspective view of a third process for forming the fused regions in the non-woven textile.

[0020] FIG. **10** is a perspective view of a first composite element that includes the non-woven textile.

[0021] FIG. **11** is a cross-sectional view of the first composite element, as defined by section line **11-11** in FIG. **10**.

[0022] FIGS. **12**A-**12**C are perspective views of a process for forming the first composite element.

[0023] FIG. **13** is a schematic perspective view of a another process for forming the first composite element.

[0024] FIG. **14** is a perspective view of a second composite element that includes the non-woven textile.

[0025] FIG. **15** is a cross-sectional view of the second composite element, as defined by section line **15-15** in FIG. **14**.

[0026] FIG. **16** is a perspective view of a third composite element that includes the non-woven.

[0027] FIG. **17** is a cross-sectional view of the third composite element, as defined by section line **17-17** in FIG. **16**.

[0028] FIGS. **18**A-**18**C are perspective views of further configurations of the third composite element.

[0029] FIG. **19** is a perspective view of a fourth composite element that includes the non-woven textile.

[0030] FIG. **20** is a cross-sectional view of the fourth composite element, as defined by section line **20-20** in FIG. **19**.

[0031] FIG. **21** is a perspective view of a fifth composite element that includes the non-woven textile.

[0032] FIG. **22** is a cross-sectional view of the fifth composite element, as defined by section line **22-22** in FIG. **21**.

[0033] FIGS. **23**A-**23**F are perspective views of further configurations of the fifth composite element.

[0034] FIG. **24** is a perspective view of two elements of the non-woven textile joined with a first seam configuration.

[0035] FIG. **25** is a cross-sectional view of the first seam configuration, as defined by section line **25-25** in FIG. **24**.

[0036] FIGS. **26**A-**26**D are side elevational views of a process for forming the first seam configuration.

[0037] FIG. **27** is a perspective view of another process for forming the first seam configuration.

[0038] FIGS. **28**A and **28**B are perspective views of elements of the non-woven textile joined with other elements to form the first seam configuration.

[0039] FIGS. **29**A-**29**C are cross-sectional views corresponding with FIG. **25** and depicting further examples of the first seam configuration.

[0040] FIG. **30** is a perspective view of two elements of the non-woven textile joined with a second seam configuration.

[0041] FIG. **31** is a cross-sectional view of the second seam configuration, as defined by section line **31-31** in FIG. **30**.

[0042] FIGS. **32**A-**32**C are side elevational views of a process for forming the second seam configuration.

[0043] FIG. **33** is a perspective view of another process for forming the second seam configuration.

[0044] FIGS. **34**A-**34**C are cross-sectional views corresponding with FIG. **31** and depicting further configurations of the second seam configuration.

[0045] FIGS. **35**A-**35**H are front elevational views of various configurations of a shirt that includes the non-woven textile.

[0046] FIGS. **36**A-**36**H are cross-sectional views of the configurations of the shirt, as respectively defined by section lines **36**A-**36**A through **36**H-**36**H in FIGS. **35**A-**35**H.

[0047] FIGS. **37**A-**37**C are front elevational views of various configurations of a pair of pants that includes the non-woven textile.

[0048] FIG. **38** is a cross-sectional view of the pair of pants, as defined by section line **38-38** in FIG. **33**A.

[0049] FIGS. **39**A-**39**G are side elevational views of various configurations of an article of footwear that includes the non-woven textile.

[0050] FIGS. **40**A-**40**D are cross-sectional views of the configurations of the article of footwear, as respectively defined by section lines **40**A-**40**A through **40**D-**40**D in FIGS. **39**A-**39**D.

[0051] FIG. **41** is a perspective view of a lace loop for the article of footwear that includes the non-woven textile.

[0052] FIGS. **42**A-**42**C are perspective views of three-dimensional configurations of the non-woven textile.

[0053] FIGS. **43**A-**43**C are perspective views of a process for forming the three-dimensional configurations of the non-woven textile.

[0054] FIGS. **44**A-**44**D are perspective views of textured configurations of the non-woven textile.

[0055] FIGS. **45**A-**45**C are perspective views of a process for forming the textured configurations of the non-woven textile.

[0056] FIGS. **46**A-**46**F are perspective views of stitched configurations of the non-woven textile.

[0057] FIG. **47** is a perspective view of an element of tape that includes the non-woven textile.

[0058] FIG. **48** is a cross-sectional view of the tape, as defined by section line **48-48** in FIG. **47**.

[0059] FIGS. **49**A-**49**C are perspective views of additional configurations of the element of tape.

[0060] FIG. **50** is a schematic view of a recycling process.

DETAILED DESCRIPTION

[0061] The following discussion and accompanying figures disclose a non-woven textile **100** and various products incorporating non-woven textile **100**. Although non-woven textile **100** is disclosed below as being incorporated into various articles of apparel (e.g., shirts, pants, footwear) for purposes of example, non-woven textile **100** may also be incorporated into a variety of other products. For example, non-woven textile **100** may be utilized in other types of apparel, containers, and upholstery for furniture. Non-woven textile **100** may

also be utilized in bed coverings, table coverings, towels, flags, tents, sails, and parachutes. Various configurations of non-woven textile **100** may also be utilized for industrial purposes, as in automotive and aerospace applications, filter materials, medical textiles, geotextiles, agrotextiles, and industrial apparel. Accordingly, non-woven textile **100** may be utilized in a variety of products for both personal and industrial purposes.

I—NON-WOVEN TEXTILE CONFIGURATION

[0062] Non-woven textile **100** is depicted in FIGS. **1** and **2** as having a first surface **101** and an opposite second surface **102**. Non-woven textile **100** is primarily formed from a plurality of filaments **103** that include a thermoplastic polymer material. Filaments **103** are distributed randomly throughout non-woven textile **100** and are bonded, fused, interlocked, or otherwise joined to form a structure with a relatively constant thickness (i.e., distance between surfaces **101** and **102**). An individual filament **103** may be located on first surface **101**, on second surface **102**, between surfaces **101** and **102**, or on both of surfaces **101** and **102**. Depending upon the manner in which non-woven textile **100** is formed, multiple portions of an individual filament **103** may be located on first surface **101**, different portions of the individual filament **103** may be located on second surface **102**, and other portions of the individual filament **103** may be located between surfaces **101** and **102**. In order to impart an interlocking structure, the various filaments **103** may wrap around each other, extend over and under each other, and pass through various areas of non-woven textile **100**. In areas where two or more filaments **103** contact each other, the thermoplastic polymer material forming filaments **103** may be bonded or fused to join filaments **103** to each other. Accordingly, filaments **103** are effectively joined to each other in a variety of ways to form a cohesive structure within non-woven textile **100**.

[0063] Fibers are often defined, in textile terminology, as having a relatively short length that ranges from one millimeter to a few centimeters or more, whereas filaments are often defined as having a longer length than fibers or even an indeterminate length. As utilized within the present document, the term "filament" or variants thereof is defined as encompassing lengths of both fibers and filaments from the textile terminology definitions. Accordingly, filaments **103** or other filaments referred to herein may generally have any length. As an example, therefore, filaments **103** may have a length that ranges from one millimeter to hundreds of meters or more.

[0064] Filaments **103** include a thermoplastic polymer material. In general, a thermoplastic polymer material melts when heated and returns to a solid state when cooled. More particularly, the thermoplastic polymer material transitions from a solid state to a softened or liquid state when subjected to sufficient heat, and then the thermoplastic polymer material transitions from the softened or liquid state to the solid state when sufficiently cooled. As such, the thermoplastic polymer material may be melted, molded, cooled, re-melted, re-molded, and cooled again through multiple cycles. Thermoplastic polymer materials may also be welded or heat-bonded, as described in greater detail below, to other textile elements, plates, sheets, polymer foam elements, thermoplastic polymer elements, thermoset polymer elements, or a variety of other elements formed from various materials. In contrast with thermoplastic polymer materials, many thermoset polymer materials do not melt when heated, simply burning instead. Although a wide range of thermoplastic polymer materials may be utilized for filaments **103**, examples of some suitable thermoplastic polymer materials include thermoplastic polyurethane, polyamide, polyester, polypropylene, and polyolefin. Although any of the thermoplastic polymer materials mentioned above may be utilized for non-woven textile **100**, an advantage to utilizing thermoplastic polyurethane relates to heatbonding and colorability. In comparison with various other thermoplastic polymer materials (e.g., polyolefin), thermoplastic polyurethane is relatively easy to bond with other elements, as discussed in greater detail below, and colorants may be added to thermoplastic polyurethane through various conventional processes.

[0065] Although each of filaments **103** may be entirely formed from a single thermoplastic polymer material, individual filaments **103** may also be at least partially formed from multiple polymer materials. As an example, an individual filament **103** may have a sheath-core configuration, wherein an exterior sheath of the individual filament **103** is formed from a first type of thermoplastic polymer material, and an interior core of the individual filament **103** is formed from a second type of thermoplastic polymer material. As a similar example, an individual filament **103** may have a bi-component configuration, wherein one half of the individual filament **103** is formed from a first type of thermoplastic polymer material, and an opposite half of the individual filament **103** is formed from a second type of thermoplastic polymer material. In some configurations, an individual filament **103** may be formed from both a thermoplastic polymer material and a thermoset polymer material with either of the sheath-core or bi-component arrangements. Although all of filaments **103** may be entirely formed from a single thermoplastic polymer material, filaments **103** may also be formed from multiple polymer materials. As an example, some of filaments **103** may be formed from a first type of thermoplastic polymer material, whereas other filaments **103** may be formed from a second type of thermoplastic polymer material. As a similar example, some of filaments **103** may be formed from a thermoplastic polymer material, whereas other filaments **103** may be formed from a thermoset polymer material. Accordingly, each filaments **103**, portions of filaments **103**, or at least some of filaments **103** may be formed from one or more thermoplastic polymer materials.

[0066] The thermoplastic polymer material or other materials utilized for non-woven textile **100** (i.e., filaments **103**) may be selected to have various stretch properties, and the materials may be considered elastomeric. Depending upon the specific product that non-woven textile **100** will be incorporated into, non-woven textile **100** or filaments **103** may stretch between ten percent to more than eight-hundred percent prior to tensile failure. For many articles of apparel, in which stretch is an advantageous property, non-woven textile **100** or filaments **103** may stretch at least one-hundred percent prior to tensile failure. As a related matter, thermoplastic polymer material or other materials utilized for non-woven textile **100** (i.e., filaments **103**) may be selected to have various recovery properties. That is, non-woven textile **100** may be formed to return to an original shape after being stretched, or non-woven textile **100** may be formed to remain in an elongated or stretched shape after being stretched. Many products that incorporate non-woven textile **100**, such as articles of apparel, may benefit from properties that allow

non-woven textile **100** to return or otherwise recover to an original shape after being stretched by one-hundred percent or more.

[0067] A variety of conventional processes may be utilized to manufacture non-woven textile **100**. In general, a manufacturing process for non-woven textile **100** includes (a) extruding or otherwise forming a plurality of filaments **103** from a thermoplastic polymer material, (b) collecting, laying, or otherwise depositing filaments **103** upon a surface, such as a moving conveyor, (c) joining filaments **103**, and (d) imparting a desired thickness through compressing or other processes. Because filaments **103** may be relatively soft or partially melted when deposited upon the surface, the polymer materials from filaments **103** that contact each other may become bonded or fused together upon cooling.

[0068] Following the general manufacturing process discussed above, various post-processing operations may be performed on non-woven textile **100**. For example, embossing or calendaring processes may be utilized to ensure that non-woven textile **100** has a substantially constant thickness, impart texture to one or both of surfaces **101** and **102**, or further bond or fuse filaments **103** to each other. Coatings may also be applied to non-woven textile **100**. Furthermore, hydrojet, hydroentangelment, needlepunching, or stitch-bonding processes may also be utilized to modify properties of non-woven textile **100**.

[0069] Non-woven textile **100** may be formed as a spunbonded or meltblown material. Whereas spunbonded non-woven textiles are formed from filaments having a cross-sectional thickness of 10 to 100 microns, meltblown non-woven textiles are formed from filaments having a cross-sectional thickness of less than 10 microns. Non-woven textile **100** may be either spunbonded, meltblown, or a combination of spunbonded and meltblown. Moreover, non-woven textile **100** may be formed to have spunbonded and meltblown layers, or may also be formed such that filaments **103** are combinations of spunbonded and meltblown.

[0070] In addition to differences in the thickness of individual filaments **103**, the overall thickness of non-woven textile **100** may vary significantly. With reference to the various figures, the thickness of non-woven textile **100** and other elements may be amplified or otherwise increased to show details or other features associated with non-woven textile **100**, thereby providing clarity in the figures. For many applications, however, a thickness of non-woven textile **100** may be in a range of 0.5 millimeters to 10.0 millimeters, but may vary considerably beyond this range. For many articles of apparel, for example, a thickness of 1.0 to 3.0 millimeters may be appropriate, although other thicknesses may be utilized. As discussed in greater detail below, regions of non-woven textile **100** may be formed such that the thermoplastic polymer material forming filaments **103** is fused to a greater degree than in other regions, and the thickness of non-woven textile **100** in the fused regions may be substantially reduced. Accordingly, the thickness of non-woven textile **100** may vary considerably.

II—FUSED REGIONS

[0071] Non-woven textile **100** is depicted as including various fused regions **104** in FIG. **3**. Fused regions **104** are portions of non-woven textile **100** that have been subjected to heat in order to selectively change the properties of those fused regions **104**. Non-woven textile **100**, or at least the various filaments **103** forming non-woven textile **100**, are discussed above as including a thermoplastic polymer material. When exposed to sufficient heat, the thermoplastic polymer material transitions from a solid state to either a softened state or a liquid state. When sufficiently cooled, the thermoplastic polymer material then transitions back from the softened state or the liquid state to the solid state. Non-woven textile **100** or regions of non-woven textile **100** may, therefore, be exposed to heat in order to soften or melt the various filaments **103**. As discussed in greater detail below, exposing various regions (i.e., fused regions **104**) of non-woven textile **100** to heat may be utilized to selectively change the properties of those regions. Although discussed in terms of heat alone, pressure may also be utilized either alone or in combination with heat to form fused regions **104**, and pressure may be required in some configurations of non-woven textile **100** to form fused regions **104**.

[0072] Fused regions **104** may exhibit various shapes, including a variety of geometrical shapes (e.g., circular, elliptical, triangular, square, rectangular) or a variety of non-defined, irregular, or otherwise non-geometrical shapes. The positions of fused regions **104** may be spaced inward from edges of non-woven textile **100**, located on one or more edges of non-woven textile **100**, or located at a corner of non-woven textile **100**. The shapes and positions of fused regions **104** may also be selected to extend across portions of non-woven textile **100** or between two edges of non-woven textile **100**. Whereas the areas of some fused regions **104** may be relatively small, the areas of other fused regions **104** may be relatively large. As described in greater detail below, two separate elements of non-woven textile **100** may be joined together, some fused regions **104** may extend across a seam that joins the elements, or some fused regions may extend into areas where other components are bonded to non-woven textile **100**. Accordingly, the shapes, positions, sizes, and other aspects of fused regions **104** may vary significantly.

[0073] When exposed to sufficient heat, and possibly pressure, the thermoplastic polymer material of the various filaments **103** of non-woven textile **100** transitions from a solid state to either a softened state or a liquid state. Depending upon the degree to which filaments **103** change state, the various filaments **103** within fused regions **104** may (a) remain in a filamentous configuration, (b) melt entirely into a liquid that cools into a non-filamentous configuration, or (c) take an intermediate configuration wherein some filaments **103** or portions of individual filaments **103** remain filamentous and other filaments **103** or portions of individual filaments **103** become non-filamentous. Accordingly, although filaments **103** in fused regions **104** are generally fused to a greater degree than filaments **103** in other areas of non-woven textile **100**, the degree of fusing in fused regions **104** may vary significantly.

[0074] Differences between the degree to which filaments **103** may be fused in fused regions **104** are depicted in FIGS. **4**A-**4**C. Referring specifically to FIG. **4**A, the various filaments **103** within fused region **104** remain in a filamentous configuration. That is, the thermoplastic polymer material forming filaments **103** remains in the configuration of a filament and individual filaments **103** remain identifiable. Referring specifically to FIG. **4**B, the various filaments **103** within fused region **104** melted entirely into a liquid that cools into a non-filamentous configuration. That is, the thermoplastic polymer material from filaments **103** melted into a non-filamentous state that effectively forms a solid polymer sheet in fused region **104**, with none of the individual filaments **103**

being identifiable. Referring specifically to FIG. **4**C, the various filaments **103** remain in a partially-filamentous configuration. That is, some of the thermoplastic polymer material forming filaments **103** remains in the configuration of a filament, and some of the thermoplastic polymer material from filaments **103** melted into a non-filamentous state that effectively forms a solid polymer sheet in fused region **104**. The configuration of the thermoplastic polymer material from filaments **103** in fused regions **104** may, therefore, be filamentous, non-filamentous, or any combination or proportion of filamentous and non-filamentous. Accordingly, the degree of fusing in each of fused regions **104** may vary along a spectrum that extends from filamentous on one end to non-filamentous on an opposite end.

[0075] A variety of factors relating to the configuration of non-woven textile **100** and the processes by which fused regions **104** are formed determine the degree to which filaments **103** are fused within fused regions **104**. As examples, factors that determine the degree of fusing include (a) the particular thermoplastic polymer material forming filaments **103**, (b) the temperature that fused regions **104** are exposed to, (c) the pressure that fused regions **104** are exposed to, and (d) the time at which fused regions **104** are exposed to the elevated temperature and/or pressure. By varying these factors, the degree of fusing that results within fused regions **104** may also be varied along the spectrum that extends from filamentous on one end to non-filamentous on an opposite end.

[0076] The configuration of fused regions **104** in FIG. **3** is intended to provide an example of the manner in which the shapes, positions, sizes, and other aspects of fused regions **104** may vary. The configuration of fused regions **104** may, however, vary significantly. Referring to FIG. **5**A, non-woven textile **100** includes a plurality of fused regions **104** with generally linear and parallel configurations. Similarly, FIG. **5**B depicts non-woven textile **100** as including a plurality of fused regions **104** with generally curved and parallel configurations. Fused regions **104** may have a segmented configuration, as depicted in FIG. **5**C. Non-woven textile **100** may also have a plurality of fused regions **104** that exhibit the configuration of a repeating pattern of triangular shapes, as in FIG. **5**D, the configuration of a repeating pattern of circular shapes, as in FIG. **5**E, or a repeating pattern of any other shape or a variety of shapes. In some configurations of non-woven textile **100**, as depicted in FIG. **5**F, one fused region **104** may form a continuous area that defines discrete areas for the remainder of non-woven textile **100**. Fused regions **104** may also have a configuration wherein edges or corners contact each other, as in the checkered pattern of FIG. **5**G. Additionally, the shapes of the various fused regions **104** may have a non-geometrical or irregular shape, as in FIG. **5**H. Accordingly, the shapes, positions, sizes, and other aspects of fused regions **104** may vary significantly.

[0077] The thickness of non-woven textile **100** may decrease in fused regions **104**. Referring to FIGS. **4**A-**4**C, for example, non-woven textile **100** exhibits less thickness in fused region **104** than in other areas. As discussed above, fused regions **104** are areas where filaments **103** are generally fused to a greater degree than filaments **103** in other areas of non-woven textile **100**. Additionally, non-woven textile **100** or the portions of non-woven textile **100** forming fused regions **104** may be compressed while forming fused regions **104**. As a result, the thickness of fused regions **104** may be decreased in comparison with other areas of non-woven textile **100**. Referring again to FIGS. **4**A-**4**C, surfaces **102** and **103** both exhibit a squared or abrupt transition between fused regions **104** and other areas of non-woven textile **100**. Depending upon the manner in which fused regions **104** are formed, however, surfaces **102** and **103** may exhibit other configurations. As an example, only first surface **101** has a squared transition to fused regions **104** in FIG. **6**A. Although the decrease in thickness of fused regions **104** may occur through a squared or abrupt transition, a curved or more gradual transition may also be utilized, as depicted in FIGS. **6**B and **6**C. In other configurations, an angled transition between fused regions **104** and other areas of non-woven textile **100** may be formed, as in FIG. **6**D. Although a decrease in thickness often occurs in fused regions **104**, no decrease in thickness or a minimal decrease in thickness is also possible, as depicted in FIG. **6**E. Depending upon the materials utilized in non-woven textile **100** and the manner in which fused regions **104** are formed, fused regions **104** may actually swell or otherwise increase in thickness, as depicted in FIG. **6**F. In each of FIGS. **6**A-**6**F, fused regions **104** are depicted as having a non-filamentous configuration, but may also have the filamentous configuration or the intermediate configuration discussed above.

[0078] Based upon the above discussion, non-woven textile **100** is formed from a plurality of filaments **103** that include a thermoplastic polymer material. Although filaments **103** are bonded, fused, interlocked, or otherwise joined throughout non-woven textile **100**, fused regions **104** are areas where filaments **103** are generally fused to a greater degree than filaments **103** in other areas of non-woven textile **100**. The shapes, positions, sizes, and other aspects of fused regions **104** may vary significantly. In addition, the degree to which filaments **103** are fused may also vary significantly to be filamentous, non-filamentous, or any combination or proportion of filamentous and non-filamentous.

III—PROPERTIES OF FUSED REGIONS

[0079] The properties of fused regions **104** may be different than the properties of other regions of non-woven textile **100**. Additionally, the properties of one of fused regions **104** may be different than the properties of another of fused regions **104**. In manufacturing non-woven textile **100** and forming fused regions **104**, specific properties may be applied to the various areas of non-woven textile **100**. More particularly, the shapes of fused regions **104**, positions of fused regions **104**, sizes of fused regions **104**, degree to which filaments **103** are fused within fused regions **104**, and other aspects of non-woven textile **100** may be varied to impart specific properties to specific areas of non-woven textile **100**. Accordingly, non-woven textile **100** may be engineered, designed, or otherwise structured to have particular properties in different areas.

[0080] Examples of properties that may be varied through the addition or the configuration of fused regions **104** include permeability, durability, and stretch-resistance. By forming one of fused regions **104** in a particular area of non-woven textile **100**, the permeability of that area generally decreases, whereas both durability and stretch-resistance generally increases. As discussed in greater detail below, the degree to which filaments **103** are fused to each other has a significant effect upon the change in permeability, durability, and stretch-resistance. Other factors that may affect permeability, durability, and stretch-resistance include the shapes, positions, and sizes of fused regions **104**, as well as the specific thermoplastic polymer material forming filaments **103**.

[0081] Permeability generally relates to ability of air, water, and other fluids (whether gaseous or liquid) to pass through or otherwise permeate non-woven textile **100**. Depending upon the degree to which filaments **103** are fused to each other, the permeability may vary significantly. In general, the permeability is highest in areas of non-woven textile **100** where filaments **103** are fused the least, and the permeability is lowest in areas of non-woven textile **100** where filaments **103** are fused the most. As such, the permeability may vary along a spectrum depending upon the degree to which filaments **103** are fused to each other. Areas of non-woven textile **100** that are separate from fused regions **104** (i.e., non-fused areas of non-woven textile **100**) generally exhibit a relatively high permeability. Fused regions **104** where a majority of filaments **103** remain in the filamentous configuration also exhibit a relatively high permeability, but the permeability is generally less than in areas separate from fused regions **104**. Fused regions **104** where filaments **103** are in both a filamentous and non-filamentous configuration have a lesser permeability. Finally, areas where a majority or all of the thermoplastic polymer material from filaments **103** exhibits a non-filamentous configuration may have a relatively small permeability or even no permeability.

[0082] Durability generally relates to the ability of non-woven textile **100** to remain intact, cohesive, or otherwise undamaged, and may include resistances to wear, abrasion, and degradation from chemicals and light. Depending upon the degree to which filaments **103** are fused to each other, the durability may vary significantly. In general, the durability is lowest in areas of non-woven textile **100** where filaments **103** are fused the least, and the durability is highest in areas of non-woven textile **100** where filaments **103** are fused the most. As such, the durability may vary along a spectrum depending upon the degree to which filaments **103** are fused to each other. Areas of non-woven textile **100** that are separate from fused regions **104** generally exhibit a relatively low durability. Fused regions **104** where a majority of filaments **103** remain in the filamentous configuration also exhibit a relatively low durability, but the durability is generally more than in areas separate from fused regions **104**. Fused regions **104** where filaments **103** are in both a filamentous and non-filamentous configuration have a greater durability. Finally, areas where a majority or all of the thermoplastic polymer material from filaments **103** exhibits a non-filamentous configuration may have a relatively high durability. Other factors that may affect the general durability of fused regions **104** and other areas of non-woven textile **100** include the initial thickness and density of non-woven textile **100**, the type of polymer material forming filaments **103**, and the hardness of the polymer material forming filaments **103**.

[0083] Stretch-resistance generally relates to the ability of non-woven textile **100** to resist stretching when subjected to a textile force. As with permeability and durability, the stretch-resistance of non-woven textile **100** may vary significantly depending upon the degree to which filaments **103** are fused to each other. As with durability, the stretch-resistance is lowest in areas of non-woven textile **100** where filaments **103** are fused the least, and the stretch-resistance is highest in areas of non-woven textile **100** where filaments **103** are fused the most. As noted above, the thermoplastic polymer material or other materials utilized for non-woven textile **100** (i.e., filaments **103**) may be considered elastomeric or may stretch at least one-hundred percent prior to tensile failure. Although the stretch-resistance of non-woven textile **100** may be greater in areas of non-woven textile **100** where filaments **103** are fused the most, fused regions **104** may still be elastomeric or may stretch at least one-hundred percent prior to tensile failure. Other factors that may affect the general stretch properties of fused regions **104** and other areas of non-woven textile **100** include the initial thickness and density of non-woven textile **100**, the type of polymer material forming filaments **103**, and the hardness of the polymer material forming filaments **103**.

[0084] As discussed in greater detail below, non-woven textile **100** may be incorporated into a variety of products, including various articles of apparel (e.g., shirts, pants, footwear). Taking a shirt as an example, non-woven textile **100** may form a majority of the shirt, including a torso region and two arm regions. Given that moisture may accumulate within the shirt from perspiration, a majority of the shirt may be formed from portions of non-woven textile **100** that do not include fused regions **104** in order to provide a relatively high permeability. Given that elbow areas of the shirt may be subjected to relatively high abrasion as the shirt is worn, some of fused regions **104** may be located in the elbow areas to impart greater durability. Additionally, given that the neck opening may be stretched as the shirt is put on an individual and taken off the individual, one of fused regions **104** may be located around the neck opening to impart greater stretch-resistance. Accordingly, one material (i.e., non-woven textile **100**) may be used throughout the shirt, but by fusing different areas to different degrees, the properties may be advantageously-varied in different areas of the shirt.

[0085] The above discussion focused primarily on the properties of permeability, durability, and stretch-resistance. A variety of other properties may also be varied through the addition or the configuration of fused regions **104**. For example, the overall density of non-woven textile **100** may be increased as the degree of fusing of filaments **103** increases. The transparency of non-woven textile **100** may also be increased as the degree of fusing of filaments **103** increases. Depending upon various factors, the darkness of a color of non-woven textile **100** may also increase as the degree of fusing of filaments **103** increases. Although somewhat discussed above, the overall thickness of non-woven textile **100** may decrease as the degree of fusing of filaments **103** increases. The degree to which non-woven textile **100** recovers after being stretched, the overall flexibility of non-woven textile **100**, and resistance to various modes of failure may also vary depending upon the degree of fusing of filaments **100**. Accordingly, a variety of properties may be varied by forming fused regions **104**.

IV—FORMATION OF FUSED REGIONS

[0086] A variety of processes may be utilized to form fused regions **104**. Referring to FIGS. **7A-7C**, an example of a method is depicted as involving a first plate **111** and a second plate **112**, which may be platens of a press. Initially, non-woven textile **100** and an insulating element **113** are located between plates **111** and **112**, as depicted in FIG. **7A**. Insulating element **113** has apertures **114** or other absent areas that correspond with fused regions **104**. That is, insulating element **113** exposes areas of non-woven textile **100** corresponding with fused regions **104**, while covering other areas of non-woven textile **100**.

[0087] Plates **111** and **112** then translate or otherwise move toward each other in order to compress or induce contact between non-woven textile **100** and insulating element **113**,

as depicted in FIG. **7**B. In order to form fused regions **104**, heat is applied to areas of non-woven textile **100** corresponding with fused regions **104**, but a lesser heat or no heat is applied to other areas of non-woven textile **100** due to the presence of insulating element **113**. That is, the temperature of the various areas of non-woven textile **100** corresponding with fused regions **104** is elevated without significantly elevating the temperature of other areas. In this example method, first plate **111** is heated so as to elevate the temperature of non-woven textile **100** through conduction. Some areas of non-woven textile **100** are insulated, however, by the presence of insulating element **113**. Only the areas of non-woven textile **100** that are exposed through apertures **114** are, therefore, exposed to the heat so as to soften or melt the thermoplastic polymer material within filaments **103**. The material utilized for insulating element **113** may vary to include metal plates, paper sheets, polymer layers, foam layers, or a variety of other materials (e.g., with low thermal conductivity) that will limit the heat transferred to non-woven textile **100** from first plate **111**. In some processes, insulating element **113** may be an integral portion of or otherwise incorporated into first plate **111**.

[0088] Upon separating plates **111** and **112**, as depicted in FIG. **7**C, non-woven textile **100** and insulating element **113** are separated from each other. Whereas areas of non-woven textile **100** that were exposed by apertures **114** in insulating element **113** form fused regions **104**, areas covered or otherwise protected by insulating element **113** remain substantially unaffected. In some methods, insulating element **113** may be structured to allow some of fused regions **104** to experience greater temperatures than other fused regions **104**, thereby fusing the thermoplastic polymer material of filaments **103** more in some of fused regions **104** than in the other fused regions **104**. That is, the configuration of insulating element **113** may be structured to heat fused regions **104** to different temperatures in order to impart different properties to the various fused regions **104**.

[0089] Various methods may be utilized to apply heat to specific areas of non-woven textile **100** and form fused regions **104**. As noted above, first plate **111** may be heated so as to elevate the temperature of non-woven textile **100** through conduction. In some processes, both plates **111** and **112** may be heated, and two insulating elements **113** may be located on opposite sides of non-woven textile **100**. Although heat may be applied through conduction, radio frequency heating may also be used, in which case insulating element **113** may prevent the passage of specific wavelengths of electromagnetic radiation. In processes where chemical heating is utilized, insulating element **113** may prevent chemicals from contacting areas of non-woven textile **100**. In other processes where radiant heat is utilized, insulating element **113** may be a reflective material (i.e., metal foil) that prevents the radiant heat from raising the temperature of various areas of non-woven textile **100**. A similar process involving a conducting element may also be utilized. More particularly, the conducting element may be used to conduct heat directly to fused regions **104**. Whereas insulating element **113** is absent in areas corresponding with fused regions **104**, the conducting element would be present in fused regions **104** to conduct heat to those areas of non-woven textile **100**.

[0090] An example of another process that may be utilized to form fused regions **104** in non-woven textile **100** is depicted in FIGS. **8**A-**8**C. Initially, non-woven textile **100** is placed adjacent to or upon second plate **112** or another surface, as depicted in FIG. **8**A. A heated die **115** having the shape of one of fused regions **104** then contacts and compresses non-woven textile **100**, as depicted in FIG. **8**B, to heat a defined area of non-woven textile **100**. Upon removal of die **115**, one of fused regions **104** is exposed. Additional dies having the general shapes of other fused regions **104** may be utilized to form the remaining fused regions **104** in a similar manner. An advantage to this process is that die **115** and each of the other dies may be heated to different temperatures, held in contact with non-woven textile **100** for different periods of time, and compressed against non-woven textile **100** with different forces, thereby varying the resulting properties of the various fused regions **104**.

[0091] An example of yet another process that may be utilized to form fused regions **104** in non-woven textile **100** is depicted in FIG. **9**. In this process, non-woven textile **100** is placed upon second plate **112** or another surface, and a laser apparatus **116** is utilized to heat specific areas of non-woven textile **100**, thereby fusing the thermoplastic polymer material of filaments **103** and forming fused regions **104**. By adjusting any or all of the power, focus, or velocity of laser apparatus **116**, the degree to which fused regions **104** are heated may be adjusted or otherwise varied. Moreover, different fused regions **104** may be heated to different temperatures to modify the degree to which filaments **103** are fused, thereby varying the resulting properties of the various fused regions **104**. An example of a suitable laser apparatus **116** is any of a variety of conventional CO_2 or Nd:YAG laser apparatuses.

V—COMPOSITE ELEMENTS

[0092] Non-woven textile **100** may be joined with various textiles, materials, or other components to form composite elements. By joining non-woven textile **100** with other components, properties of both non-woven textile **100** and the other components are combined in the composite elements. An example of a composite element is depicted in FIGS. **10** and **11**, in which a component **120** is joined to non-woven textile **100** at second surface **102**. Although component **120** is depicted as having dimensions that are similar to dimensions of non-woven textile **100**, component **120** may have a lesser or greater length, a lesser or greater width, or a lesser or greater thickness. If, for example, component **120** is a textile that absorbs water or wicks water away, then the combination of non-woven textile **100** and component **120** may be suitable for articles of apparel utilized during athletic activities where an individual wearing the apparel is likely to perspire. As another example, if component **120** is a compressible material, such as a polymer foam, then the combination of non-woven textile **100** and component **120** may be suitable for articles of apparel where cushioning (i.e., attenuation of impact forces) is advantageous, such as padding for athletic activities that may involve contact or impact with other athletes or equipment. As a further example, if component **120** is a plate or sheet, then the combination of non-woven textile **100** and component **120** may be suitable for articles of apparel that impart protection from acute impacts. Accordingly, a variety of textiles, materials, or other components maybe joined with a surface of non-woven textile **100** to form composite elements with additional properties.

[0093] The thermoplastic polymer material in filaments **103** may be utilized to secure non-woven textile **100** to component **120** or other components. As discussed above, a thermoplastic polymer material melts when heated and returns to

a solid state when cooled sufficiently. Based upon this property of thermoplastic polymer materials, heatbonding processes may be utilized to form a heatbond that joins portions of composite elements, such as non-woven textile **100** and component **120**. As utilized herein, the term "heatbonding" or variants thereof is defined as a securing technique between two elements that involves a softening or melting of a thermoplastic polymer material within at least one of the elements such that the materials of the elements are secured to each other when cooled. Similarly, the term "heatbond" or variants thereof is defined as the bond, link, or structure that joins two elements through a process that involves a softening or melting of a thermoplastic polymer material within at least one of the elements such that the materials of the elements are secured to each other when cooled. As examples, heatbonding may involve (a) the melting or softening of two elements incorporating thermoplastic polymer materials such that the thermoplastic polymer materials intermingle with each other (e.g., diffuse across a boundary layer between the thermoplastic polymer materials) and are secured together when cooled; (b) the melting or softening of a first textile element incorporating a thermoplastic polymer material such that the thermoplastic polymer material extends into or infiltrates the structure of a second textile element (e.g., extends around or bonds with filaments or fibers in the second textile element) to secure the textile elements together when cooled; and (c) the melting or softening of a textile element incorporating a thermoplastic polymer material such that the thermoplastic polymer material extends into or infiltrates crevices or cavities formed in another element (e.g., polymer foam or sheet, plate, structural device) to secure the elements together when cooled. Heatbonding may occur when only one element includes a thermoplastic polymer material or when both elements include thermoplastic polymer materials. Additionally, heatbonding does not generally involve the use of stitching or adhesives, but involves directly bonding elements to each other with heat. In some situations, however, stitching or adhesives may be utilized to supplement the heatbond or the joining of elements through heatbonding. A needlepunching process may also be utilized to join the elements or supplement the heatbond.

[0094] Although a heatbonding process may be utilized to form a heatbond that joins non-woven textile **100** and component **120**, the configuration of the heatbond at least partially depends upon the materials and structure of component **120**. As a first example, if component **120** is at least partially formed from a thermoplastic polymer material, then the thermoplastic polymer materials of non-woven textile **100** and component **120** may intermingle with each other to secure non-woven textile **100** and component **120** together when cooled. If, however, the thermoplastic polymer material of component **120** has a melting point that is significantly higher than the thermoplastic polymer material of non-woven textile **100**, then the thermoplastic polymer material of non-woven textile **100** may extend into the structure, crevices, or cavities of component **120** to secure the elements together when cooled. As a second example, component **120** may be formed from a textile that does not include a thermoplastic polymer material, and the thermoplastic polymer material of non-woven textile **100** may extend around or bond with filaments in component **120** to secure the textile elements together when cooled. As a third example, component **120** may be a polymer foam material, polymer sheet, or plate that includes a thermoplastic polymer material, and the thermoplastic polymer materials of non-woven textile **100** and component **120** may intermingle with each other to secure non-woven textile **100** and component **120** together when cooled. As a fourth example, component **120** may be a polymer foam material, polymer sheet, or plate that does not include a thermoplastic polymer material, and the thermoplastic polymer material of non-woven textile **100** may extend into or infiltrate crevices or cavities within component **120** to secure the elements together when cooled. Referring to FIG. **11**, a plurality of heatbond elements **105** (e.g., the thermoplastic polymer material from one or both of non-woven textile **100** and component **120**) are depicted as extending between non-woven textile **100** and component **120** to join the elements together. Accordingly, a heatbond may be utilized to join non-woven textile **100** and component **120** even when component **120** is formed from a diverse range of materials or has one of a variety of structures.

[0095] A general manufacturing process for forming a composite element will now be discussed with reference to FIGS. **12**A-**12**C. Initially, non-woven textile **100** and component **120** are located between first plate **111** and second plate **112**, as depicted in FIG. **12**A. Plates **111** and **112** then translate or otherwise move toward each other in order to compress or induce contact between non-woven textile **100** and component **120**, as depicted in FIG. **12**B. In order to form the heatbond and join non-woven textile **100** and component **120**, heat is applied to non-woven textile **100** and component **120**. That is, the temperatures of non-woven textile **100** and component **120** are elevated to cause softening or melting of the thermoplastic polymer material at the interface between non-woven textile **100** and component **120**. Depending upon the materials of both non-woven textile **100** and component **120**, as well as the overall configuration of component **120**, only first plate **111** may be heated, only second plate **112** may be heated, or both plates **111** and **112** may be heated so as to elevate the temperatures of non-woven textile **100** and component **120** through conduction. Upon separating plates **111** and **112**, as depicted in FIG. **12**C, the composite element formed from both non-woven textile **100** and component **120** may be removed and permitted to cool.

[0096] The manufacturing process discussed relative to FIGS. **12**A-**12**C generally involves (a) forming non-woven textile **100** and component **120** separately and (b) subsequently joining non-woven textile **100** and component **120** to form the composite element. Referring to FIG. **13**, a process wherein filaments **103** are deposited directly onto component **120** during the manufacture of non-woven textile **100** is depicted. Initially, component **120** is placed upon plate **112**, which may also be a moving conveyor. An extrusion nozzle **121** then extrudes or otherwise forms a plurality of filaments **103** from a thermoplastic polymer material. As filaments **103** fall upon component **120**, filaments **103** collect, lie, or otherwise deposit upon a surface of component **120**, thereby forming non-woven textile **100**. Once cooled, non-woven textile **100** is effectively joined to component **120**, thereby forming the composite element. Accordingly, filaments **103** may be deposited directly upon component **120** during the manufacture of non-woven textile **100**. As a similar manufacturing process, material (e.g., foam, molten polymer, a coating) may be sprayed, deposited, or otherwise applied to a surface of non-woven textile **100** to form the composite element. Moreover, a composite element that includes two or more layers of non-woven textile **100** may be formed by repeatedly depositing layers of filaments **103**. When each of the layers of

filaments **103** have different properties or are formed from different polymer materials, the resulting composite element may have the combined properties of the various layers.

[0097] Although the general processes discussed above may be utilized to form a composite element from non-woven textile **100** and component **120**, other methods may also be utilized. Rather than heating non-woven textile **100** and component **120** through conduction, other methods that include radio frequency heating or chemical heating may be utilized. In some processes, second surface **102** and a surface of component **120** may be heated through radiant heating prior to being compressed between plates **111** and **112**. An advantage of utilizing radiant heating to elevate the temperature of only the surfaces forming the heatbond is that the thermoplastic polymer material within other portions of non-woven textile **100** and component **120** are not heated significantly. In some processes, stitching or adhesives may also be utilized between non-woven textile **100** and component **120** to supplement the heatbond.

[0098] Non-woven textile **100** is depicted in FIGS. **10-12**C as having a configuration that does not include fused regions **104**. In order to impart varying properties to a composite element, fused regions **104** may be formed in non-woven textile **100**. In some processes fused regions **104** may be formed prior to joining non-woven textile **100** with another component (e.g., component **120**). In other processes, however, fused regions **104** may be formed during the heatbonding process or following the heatbonding process. Accordingly, fused regions **104** may be formed at any stage of the various manufacturing process for composite elements.

VI—COMPOSITE ELEMENT CONFIGURATIONS

[0099] Concepts relating to the general structure of composite elements and processes for forming the composite elements were presented above. As more specific examples, the following discussion discloses various composite element configurations, wherein non-woven textile **100** is joined with each of a mechanically-manipulated textile **130**, a sheet **140**, a foam layer **150**, and a plurality of strands **160**.

[0100] An example of a composite element that includes non-woven textile **100** and mechanically-manipulated textile **130** is depicted in FIGS. **14** and **15**. Whereas non-woven textile **100** is formed from randomly-distributed filaments **103**, textile **130** is formed by mechanically-manipulating one or more yarns **131** to form a woven or interlooped structure. When manufactured with an interlooped structure, textile **130** may be formed through a variety of knitting processes, including flat knitting, wide tube circular knitting, narrow tube circular knit jacquard, single knit circular knit jacquard, double knit circular knit jacquard, warp knit jacquard, and double needle bar raschel knitting, for example. Accordingly, textile **130** may have a variety of configurations, and various weft-knitting and warp-knitting techniques may be utilized to manufacture textile **130**. Although yarns **131** of textile **130** may be at least partially formed from a thermoplastic polymer material, many mechanically-manipulated textiles are formed from natural filaments (e.g., cotton, silk) or thermoset polymer materials. In order to form a heatbond between non-woven textile **100** and textile **130**, the thermoplastic polymer material from non-woven textile **100** extends around or bonds with yarns **131** or extends into the structure of yarns **131** to secure non-woven textile **100** and textile **130** together when cooled. More particularly, various heatbond elements **105** are depicted in FIG. **15** as extending around or into yarns **131** to form the heatbond. A process similar to the process discussed above relative to FIGS. **12**A-**12**C may be utilized to form the heatbond between non-woven textile **100** and textile **130**. That is, the heatbond between non-woven textile **100** and textile **130** may be formed, for example, by compressing and heating the elements between plates **111** and **112**.

[0101] The combination of non-woven textile **100** and textile **130** may impart some advantages over either of non-woven textile **100** and textile **130** alone. For example, textile **130** may exhibit one-directional stretch, wherein the configuration of yarns **131** allows textile **130** to stretch in one direction, but limits stretch in a perpendicular direction. When non-woven textile **100** and textile **130** are joined, the composite element may also exhibit a corresponding one-directional stretch. As another example, the composite element may also be incorporated into various articles of apparel, with textile **130** being positioned to contact the skin of an individual wearing the apparel, and the materials selected for textile **130** and the structure of textile **130** may impart more comfort than non-woven textile **100** alone. In addition to these advantages, various fused regions **104** may be formed in non-woven textile **100** to impart different degrees of permeability, durability, and stretch-resistance to specific areas of the composite element. Accordingly, the composite element may have a configuration that imparts a combination of properties that neither non-woven textile **100** nor textile **130** may impart alone.

[0102] Another example of a composite element, which includes non-woven textile **100** and sheet **140**, is depicted in FIGS. **16** and **17**. Sheet **140** may be formed from a sheet or plate of a polymer, suede, synthetic suede, metal, or wood material, for example, and may be either flexible or inflexible. In order to form a heatbond between non-woven textile **100** and sheet **140**, the thermoplastic polymer material of non-woven textile **100** may extend into or infiltrate crevices or cavities within sheet **140** to secure the elements together when cooled. In circumstances where sheet **140** is formed from a thermoplastic polymer material, then the thermoplastic polymer materials of non-woven textile **100** and sheet **140** may intermingle with each other (e.g., diffuse across a boundary layer between the thermoplastic polymer materials) to secure non-woven textile **100** and sheet **140** together when cooled. A process similar to the process discussed above relative to FIGS. **12**A-**12**C may be utilized to form the heatbond between non-woven textile **100** and sheet **140**. As an alternative, stitching or adhesives may be utilized, as well as a needle punching process to push filaments **103** into or through sheet **140** to join non-woven textile **100** and sheet **140** or to supplement the heatbond.

[0103] The combination of non-woven textile **100** and sheet **140** may be suitable for articles of apparel that impart protection from acute impacts, for example. A lack of stitching, rivets, or other elements joining non-woven textile **100** and sheet **140** forms a relatively smooth interface. When incorporated into an article of apparel, the lack of discontinuities in the area joining non-woven textile **100** and sheet **140** may impart comfort to the individual wearing the apparel. As another example, edges of sheet **140** are depicted as being spaced inward from edges of non-woven textile **100**. When incorporating the composite element into a product, such as apparel, the edges of non-woven textile **100** may be utilized to join the composite element to other textile elements or portions of the apparel. In addition to these advan-

tages, various fused regions **104** may be formed in non-woven textile **100** to impart different degrees of permeability, durability, and stretch-resistance to areas of the composite element.

[0104] Although sheet **140** is depicted as having a solid or otherwise continuous configuration, sheet **140** may also be absent in various areas of the composite element. Referring to FIG. **18**A, sheet **140** has the configuration of various strips of material, that extend across non-woven textile **100**. A similar configuration is depicted in FIG. **18**B, wherein sheet **140** has the configuration of a grid. In addition to imparting strength and tear-resistance to the composite element, the strip and grid configurations of sheet **140** expose portions of non-woven textile **100**, thereby allowing permeability in the exposed areas. In each of FIGS. **16**-**18**B, sheet **140** is depicted as having a thickness that is comparable to the thickness of non-woven textile **100**. In FIG. **18**C, however, sheet **140** is depicted as having a thickness that is substantially less than the thickness of non-woven textile **100**. Even with a reduced thickness, sheet **140** may impart strength and tear-resistance, while allowing permeability.

[0105] A further example of a composite element that includes two layers of non-woven textile **100** and foam layer **150** is depicted in FIGS. **19** and **20**. Foam layer **150** may be formed from a foamed polymer material that is either thermoset or thermoplastic. In configurations where foam layer **150** is formed from a thermoset polymer material, the thermoplastic polymer material from the two layers of non-woven textile **100** may extend into or infiltrate crevices or cavities on opposite sides of foam layer **150** to form heatbonds and secure the elements together. In configurations where foam layer **150** is formed from a thermoplastic polymer material, the thermoplastic polymer materials of the two layers of non-woven textile **100** and foam layer **150** may intermingle with each other to form heatbonds and secure the elements together.

[0106] A process similar to the process discussed above relative to FIGS. **12**A-**12**C may be utilized to form the heatbonds between the two layer of non-woven textile **100** and foam layer **150**. More particularly, foam layer **150** may be placed between the two layers of non-woven textile **100**, and these three elements may be located between plates **111** and **112**. Upon compressing and heating, heatbonds may form between the two layers of non-woven textile **100** and the opposite sides of foam layer **150**. Additionally, the two layers of non-woven textile **100** may be heatbonded to each other around the perimeter of foam layer **150**. That is, heatbonds may also be utilized to join the two layers of non-woven textile **100** to each other. In addition to foam layer **150**, other intermediate elements (e.g., textile **130** or sheet **140**) may be bonded between the two layers of non-woven textile **100**. A needle punching process may also be utilized to push filaments **103** into or through foam layer **150** to join non-woven textile **100** and foam layer **150** or to supplement the heatbond, as well as stitching or adhesives.

[0107] The combination of the two layers of non-woven textile **100** and foam layer **150** may be suitable for articles of apparel where cushioning (i.e., attenuation of impact forces) is advantageous, such as padding for athletic activities that may involve contact or impact with other athletes or equipment. The lack of discontinuities in the area joining the layers of non-woven textile **100** and foam layer **150** may impart comfort to the individual wearing the apparel. The edges of the two layers of non-woven textile **100** may also be utilized to join the composite element to other textile elements or portions of the apparel. In addition to these advantages, various fused regions **104** may be formed in non-woven textile **100** to impart different degrees of permeability, durability, and stretch-resistance to the composite element.

[0108] An example of a composite element that includes non-woven textile **100** and a plurality of strands **160** is depicted in FIGS. **21** and **22**. Strands **160** are secured to non-woven textile **100** and extend in a direction that is substantially parallel to either of surfaces **101** and **102**. Referring to the cross-section of FIG. **22**, the positions of strands **160** relative to surfaces **101** and **102** may vary significantly. More particularly, strands **160** may be located upon first surface **101**, strands **160** may be partially embedded within first surface **101**, strands **160** may be recessed under and adjacent to first surface **101**, strands **160** may be spaced inward from first surface **101** and located between surfaces **101** and **102**, or strands **160** may be adjacent to second surface **102**. A heatbonding process may be utilized to secure strands **160** to non-woven textile **100**. That is, thermoplastic polymer material of non-woven textile **100** may be softened or melted to form a heatbond that joins strands **160** to non-woven textile **100**. Depending upon the degree to which the thermoplastic polymer material of non-woven textile **100** is softened or melted, strands **160** may be positioned upon first surface **101** or located inward from first surface **101**.

[0109] Strands **160** may be formed from any generally one-dimensional material exhibiting a length that is substantially greater than a width and a thickness. Depending upon the material utilized and the desired properties, strands **160** may be individual filaments, yarns that include a plurality of filaments, or threads that include a plurality of yarns. As discussed in greater detail below, suitable materials for strands **160** include rayon, nylon, polyester, polyacrylic, silk, cotton, carbon, glass, aramids (e.g., para-aramid fibers and meta-aramid fibers), ultra high molecular weight polyethylene, and liquid crystal polymer, for example. In some configurations, strands **160** may also be metal wires or cables.

[0110] In comparison with the thermoplastic polymer material forming non-woven textile **100**, many of the materials noted above for strands **160** exhibit greater tensile strength and stretch-resistance. That is, strands **160** may be stronger than non-woven textile **100** and may exhibit less stretch than non-woven textile **100** when subjected to a tensile force. The combination of non-woven textile **100** and strands **160** imparts a structure wherein the composite element may stretch in one direction and is substantially stretch-resistant and has more strength in another direction. Referring to FIG. **21**, two perpendicular directions are identified with arrows **161** and **162**. When the composite element is subjected to a tensile force (i.e., stretched) in the direction of arrow **161**, non-woven textile **100** may stretch significantly. When the composite element is subjected to a tensile force (i.e., stretched) in the direction of arrow **162**, however, strands **160** resist the force and are more stretch-resistant than non-woven textile **100**. Accordingly, strands **160** may be oriented to impart strength and stretch-resistance to the composite element in particular directions. Although strands **160** are discussed herein as imparting stretch-resistance, strands **160** may be formed from materials that stretch significantly. Strands **160** may also be utilized to impart other properties to the composite element. For example, strands **160** may be electrically-conductive to allow the transmission of power or

data, or strands **160** may be located within non-woven textile **100** to impart a particular aesthetic.

[0111] Strands **160** are depicted as being substantially parallel to each other in FIG. **21**, and ends of strands **160** are depicted as being spaced inward from edges of non-woven textile **100**. In other composite element configurations, strands **160** may be arranged in other orientations and may extend entirely or only partially across non-woven textile **100**. Referring to FIG. **23**A, strands **160** are depicted as crossing each other. Given the angle that strands **160** are oriented relative to each other, strands **160** may only partially limit the stretch in the direction of arrow **161**, but the composite element may be substantially stretch-resistant in the direction of arrow **162**. A similar configuration is depicted in FIG. **23**B, wherein strands **160** cross each other at right angles. In this configuration, strands **160** may impart stretch-resistance in the directions of both arrows **161** and **162**. That is, the composite element may be stretch-resistant in all directions due to the orientation of strands **160**. As another matter, whereas ends of strands **160** are spaced inward from edges of non-woven textile **100** in FIG. **23**A, the ends of strands **160** extend to the edges of non-woven textile **100** in FIG. **23**B. Strands **160** are depicted as having a wave-like or non-linear configuration in FIG. **23**C. In this configuration, strands **160** may permit some stretch in the direction of arrow **162**. Once strands **160** straighten due to the stretch, however, then strands **160** may substantially resist stretch and provide strength in the direction of arrow **162**. Another configuration is depicted in FIG. **23**D, wherein strands **160** are arranged in a non-parallel configuration to radiate outward.

[0112] In some configurations of the composite element, fused regions **104** may be added to further affect the properties of the composite element. Referring to FIG. **23**E, a single fused region **104** extends across non-woven textile **100** in the direction of arrow **161**. Given that fused regions **104** may exhibit more stretch-resistance than other areas of non-woven textile **100**, the fused region in FIG. **23**E may impart some stretch-resistance in the direction of arrow **161**, and strands **160** may impart stretch-resistance to the direction of arrow **162**. In some configurations, fused regions may extend along strands **160** and in the direction of arrow **162**, as depicted in FIG. **23**F. Accordingly, fused regions **104** may be utilized with strands **160** to impart specific properties to a composite element.

[0113] The material properties of strands **160** relate to the specific materials that are utilized within strands **160**. Examples of material properties that may be relevant in selecting specific materials for strands **160** include tensile strength, tensile modulus, density, flexibility, tenacity, and durability. Each of the materials noted above as being suitable for strands **160** exhibit different combinations of material properties. Accordingly, the material properties for each of these materials may be compared in selecting particular materials for strands **160**. Tensile strength is a measure of resistance to breaking when subjected to tensile (i.e., stretching) forces. That is, a material with a high tensile strength is less likely to break when subjected to tensile forces than a material with a low tensile strength. Tensile modulus is a measure of resistance to stretching when subjected to tensile forces. That is, a material with a high tensile modulus is less likely to stretch when subjected to tensile forces than a material with a low tensile modulus. Density is a measure of mass per unit volume. That is, a particular volume of a material with a high density has more weight than the same volume of a material with a low density.

[0114] Nylon has a relatively low tensile strength, a relatively low tensile modulus, and an average density when compared to each of the other materials. Steel has an average tensile strength, a moderately high tensile modulus, and a relatively high density when compared to the other materials. While nylon is less dense than steel (i.e., lighter than steel), nylon has a lesser strength and a greater propensity to stretch than steel. Conversely, while steel is stronger and exhibits less stretch, steel is significantly more dense (i.e., heavier than nylon). Each of the engineering fibers (e.g., carbon fibers, aramid fibers, ultra high molecular weight polyethylene, and liquid crystal polymer) exhibit tensile strengths and tensile moduli that are comparable to steel. In addition, the engineering fibers exhibit densities that are comparable to nylon. That is, the engineering fibers have relatively high tensile strengths and tensile moduli, but also have relatively low densities. In general, each of the engineering fibers have a tensile strength greater than 0.60 gigapascals, a tensile modulus greater than 50 gigapascals, and a density less than 2.0 grams per centimeter cubed.

[0115] In addition to material properties, the structural properties of various configurations of strands **160** may be considered when selecting a particular configuration for a composite element. The structural properties of strands **160** relate to the specific structure that is utilized to form strands **160**. Examples of structural properties that may be relevant in selecting specific configurations for strands **160** include denier, number of plies, breaking force, twist, and number of individual filaments, for example.

[0116] Based upon the above discussion, non-woven textile **100** may be heatbonded or otherwise joined (e.g., through stitching or adhesive bonding) to a variety of other components to form composite elements. An advantage of joining non-woven textile **100** to the other components is that the composite elements generally include combined properties from both non-woven textile **100** and the other components. As examples, composite elements may be formed by joining non-woven textile **100** to any of textile **130**, sheet **140**, foam layer **150**, and strands **160**.

VII—SEAM FORMATION

[0117] In order to incorporate non-woven textile **100** into a product, non-woven textile **100** is often joined with other elements of the product to form a seam. For example, non-woven textile **100** may be joined with other non-woven textile elements, various mechanically-manipulated textile elements, or polymer sheets. Although stitching and adhesive bonding may be utilized to join non-woven textile **100** to the other elements of the product, the seam may also be formed through a heatbonding process.

[0118] As an example of the manner in which non-woven textile **100** may be joined to another element, FIGS. **24** and **25** depict a pair of elements of non-woven textile **100** that are joined to form a seam **106**. That is, an edge area of one non-woven textile **100** is joined with an edge area of the other non-woven textile **100** at seam **106**. More particularly, seam **106** is formed by heatbonding first surface **101** of one non-woven textile **100** with first surface **101** of the other non-woven textile **100**. As with some conventional stitched seams, first surfaces **101** from each non-woven textile **100** are turned inward at seam **106** to face each other, and first surfaces **101**

are joined to each other. In contrast with some conventional stitched seams, a heatbond is utilized to join first surfaces **101** from each non-woven textile **100** to each other. In some configurations, however, stitching or adhesive bonding may also be utilized to reinforce seam **106**.

[0119] A general manufacturing process for forming seam **106** will now be discussed with reference to FIGS. **26**A-**26**D. Initially, the pair of elements of non-woven textile **100** are located between a first seam-forming die **117** and a second seam-forming die **118**, as depicted in FIG. **26**A. Seam-forming dies **117** and **118** then translate or otherwise move toward each other in order to compress or induce contact between edge areas of the pair of elements of non-woven textile **100**, as depicted in FIG. **26**B. In order to form the heatbond and join the edge areas of the elements of non-woven textile **100**, seam-forming dies **117** and **118** apply heat to the edge areas. That is, seam-forming dies **117** and **118** elevate the temperatures of the edge areas of the pair of elements of non-woven textile **100** to cause softening or melting of the thermoplastic polymer material at the interface between the edge areas. Upon separating seam-forming dies **117** and **118**, as depicted in FIG. **26**C, seam **106** is formed between the edge areas of the pair of elements of non-woven textile **100**. After being permitted to cool, the pair of elements of non-woven textile **100** may be unfolded, as depicted in FIG. **26**D. After forming, seam **106** may also be trimmed to limit the degree to which the end areas of the pair of elements of non-woven textile **100** extend downward at seam **106**.

[0120] Although the general process discussed above may be utilized to form seam **106**, other methods may also be utilized. Rather than heating the edge areas of elements of non-woven textile **100** through conduction, other methods that include radio frequency heating, chemical heating, or radiant heating may be utilized. In some processes, stitching or adhesives may also be utilized between the pair of elements of non-woven textile **100** to supplement the heatbond. As an alternate method, the pair of elements of non-woven textile **100** may be placed upon a surface, such as second plate **112**, and a heated roller **119** may form seam **106**, as depicted in FIG. **27**.

[0121] As with the formation of fused regions **104**, the formation of seam **106** involves softening or melting the thermoplastic polymer material in various filaments **103** that are located in the area of seam **106**. Depending upon the degree to which filaments **103** change state, the various filaments **103** in the area of seam **106** may (a) remain in a filamentous configuration, (b) melt entirely into a liquid that cools into a non-filamentous configuration, or (c) take an intermediate configuration wherein some filaments **103** or portions of individual filaments **103** remain filamentous and other filaments **103** or portions of individual filaments **103** become non-filamentous. Referring to FIG. **25**, filaments **103** are depicted as remaining in the filamentous configuration in the area of seam **106**, but may be melted into a non-filamentous configuration or may take the intermediate configuration. Accordingly, although filaments **103** in the area of seam **106** are generally fused to a greater degree than filaments **103** in other areas of non-woven textile **100**, the degree of fusing may vary significantly.

[0122] In forming seam **106** between the pair of elements of non-woven textile **100**, the thermoplastic polymer materials from the various filaments **103** intermingle with each other and are secured together when cooled. Non-woven textile **100** may also be joined with other types of elements to form a similar seam **106**. As a first example, non-woven textile **100** is depicted as being joined with mechanically-manipulated textile **130** at seam **106** in FIG. **28**A. Although yarns **131** of textile **130** may be at least partially formed from a thermoplastic polymer material, many mechanically-manipulated textiles are formed from natural filaments (e.g., cotton, silk) or thermoset polymer materials. In order to form a heatbond between non-woven textile **100** and textile **130** at seam **106**, the thermoplastic polymer material from non-woven textile **100** extends around or bonds with yarns **131** or extends into the structure of yarns **131** to secure the non-woven textile **100** and textile **130** together at seam **106** when cooled. As a second example, non-woven textile **100** is depicted as being joined with sheet **140** at seam **106** in FIG. **28**B. In some configurations, sheet **140** may be a flexible polymer sheet. In order to form a heatbond between non-woven textile **100** and sheet **140** at seam **106**, the thermoplastic polymer material of non-woven textile **100** may extend into or infiltrate crevices or cavities within sheet **140** to secure the elements together when cooled. In circumstances where sheet **140** is formed from a thermoplastic polymer material, then the thermoplastic polymer materials of non-woven textile **100** and sheet **140** may intermingle with each other to secure non-woven textile **100** and sheet **140** together at seam **106** when cooled.

[0123] The thicknesses of elements of non-woven textile **100** are depicted as being substantially uniform, even in the areas of seam **106**. Depending upon the temperature and pressure used to form seam **106**, the configuration of seam **106** may vary to include a variety of other configurations. Referring to FIG. **29**A, elements of non-woven textile **100** exhibit reduced thicknesses in the areas of seam **106**, and the thermoplastic polymer material of filaments **103** is depicted as being in a non-filamentous configuration. Seam **106** may also exhibit a pointed configuration, as depicted in FIG. **29**B. The temperature and pressure used to form seam **106** may also impart a stepped structure, as depicted in FIG. **29**C. Accordingly, the configuration of the pair of elements of non-woven textile **100** at seam **106** may vary significantly. Moreover, similar configurations for seam **106** may result when non-woven textile **100** is joined with other elements, such as textile **130** or sheet **140**.

[0124] As another example of the manner in which non-woven textile **100** may be joined to another element, FIGS. **30** and **31** depict a pair of elements of non-woven textile **100** that are joined to form a seam **107**. In this configuration, an edge area of one non-woven textile **100** overlaps and is joined with an edge of the other non-woven textile **100** at seam **107**. Although a heatbond is utilized to join the pair of elements of non-woven textile **100** to each other, stitching or adhesive bonding may also be utilized to reinforce seam **107**. Moreover, a single non-woven textile **100** may also be joined with other types of elements, including textile **130** and sheet **140**, to form a similar seam **107**.

[0125] A general manufacturing process for forming seam **107** will now be discussed with reference to FIGS. **32**A-**32**C. Initially, the pair of elements of non-woven textile **100** are positioned in an overlapping configuration between first seam-forming die **117** and second seam-forming die **118**, as depicted in FIG. **32**A. Seam-forming dies **117** and **118** then translate or otherwise move toward each other in order to compress or induce contact between edge areas of the pair of non-woven textile elements **100**, as depicted in FIG. **32**B. In order to form the heatbond and join the edge areas of the elements of non-woven textile **100**, seam-forming dies **117**

and **118** apply heat to the edge areas. That is, seam-forming dies **117** and **118** elevate the temperatures of the edge areas of the pair of elements of non-woven textile **100** to cause softening or melting of the thermoplastic polymer material at the interface between the edge areas. Upon separating seam-forming dies **117** and **118**, as depicted in FIG. **32**C, seam **107** is formed between the edge areas of the pair of elements of non-woven textile **100**.

[0126] Although the general process discussed above may be utilized to form seam **107**, other methods may also be utilized. Rather than heating the edge areas of elements of non-woven textile **100** through conduction, other methods that include radio frequency heating, chemical heating, or radiant heating may be utilized. In some processes, stitching or adhesives may also be utilized between the pair of elements of non-woven textile **100** to supplement the heatbond. As an alternate method, the pair of elements of non-woven textile **100** may be placed upon a surface, such as second plate **112**, and heated roller **119** may form seam **107**, as depicted in FIG. **33**. Referring to FIG. **31**, filaments **103** are depicted as remaining in the filamentous configuration in the area of seam **107**, but may be melted into a non-filamentous configuration or may take the intermediate configuration. Accordingly, although filaments **103** in the area of seam **107** are generally fused to a greater degree than filaments **103** in other areas of non-woven textile **100**, the degree of fusing may vary significantly.

[0127] First surfaces **101** of the pair of elements of non-woven textile **100** are depicted as being co-planar or flush with each other in FIGS. **30** and **31**. Similarly, second surfaces **102** of the pair of elements of non-woven textile **100** are also depicted as being coplanar or flush with each other. Depending upon the temperature and pressure used to form seam **107**, the configuration of seam **107** may vary to include a variety of other configurations. Referring to FIG. **34**A, surfaces **101** and **102** bow inward at seam **107**, and the thermoplastic polymer material is depicted as having a non-filamentous configuration. Surfaces **101** and **102** angle inward more-abruptly in FIG. **34**B, which may be caused from pressure exerted by seam-forming dies **117** and **118**. As another configuration, FIG. **34**C depicts the pair of elements of non-woven textile **100** as being joined at **107** in a non-coplanar configuration. Accordingly, the configuration of the pair of elements of non-woven textile **100** at seam **107** may vary significantly. Moreover, similar configurations for seam **107** may result when non-woven textile **100** is joined with other elements, such as textile **130** or sheet **140**.

VIII—GENERAL PRODUCT CONFIGURATIONS

[0128] Non-woven textile **100**, multiple elements of non-woven textile **100**, or various composite element configurations may be utilized in articles of apparel (e.g., shirts, jackets and other outerwear, pants, footwear), containers, and upholstery for furniture. Various configurations of non-woven textile **100** may also be utilized in bed coverings, table coverings, towels, flags, tents, sails, and parachutes, as well as industrial purposes that include automotive and aerospace applications, filter materials, medical textiles, geotextiles, agrotextiles, and industrial apparel. Accordingly, non-woven textile **100** may be utilized in a variety of products for both personal and industrial purposes.

[0129] Although non-woven textile **100** may be utilized in a variety of products, the following discussion provides examples of articles of apparel that incorporate non-woven textile **100**. That is, the following discussion demonstrates various ways in which non-woven textile **100** may be incorporated into a shirt **200**, a pair of pants **300**, and an article of footwear **400**. Moreover, examples of various configurations of shirt **200**, pants **300**, and footwear **400** are provided in order to demonstrate various concepts associated with utilizing non-woven textile **100** in products. Accordingly, while the concepts outlined below are specifically applied to various articles of apparel, the concepts may be applied to a variety of other products.

IX—SHIRT CONFIGURATIONS

[0130] Various configurations of shirt **200** are depicted in FIGS. **35**A-**35**H as including a torso region **201** and a pair of arm regions **202** that extend outward from torso region **201**. Torso region **201** corresponds with a torso of a wearer and covers at least a portion of the torso when worn. An upper area of torso region **201** defines a neck opening **203** through which the neck and head of the wearer protrude when shirt **200** is worn. Similarly, a lower area of torso region **201** defines a waist opening **204** through which the waist or pelvic area of the wearer protrudes when shirt **200** is worn. Arm regions **202** respectively correspond with a right arm and a left arm of the wearer and cover at least a portion of the right arm and the left arm when shirt **200** is worn. Each of arm regions **202** define an arm opening **205** through which the hands, wrists, or arms of the wearer protrude when shirt **200** is worn. Shirt **200** has the configuration of a shirt-type garment, particularly a long-sleeved shirt. In general, shirt-type garments cover a portion of a torso of the wearer and may extend over arms of the wearer. In further examples, apparel having the general structure of shirt **200** may have the configuration of other shirt-type garments, including short-sleeved shirts, tank tops, undershirts, jackets, or coats.

[0131] A first configuration of shirt **200** is depicted in FIGS. **35**A and **36**A. A majority of shirt **200** is formed from non-woven textile **100**. More particularly, torso region **201** and each of arm regions **202** are primarily formed from non-woven textile **100**. Although shirt **200** may be formed from a single element of non-woven textile **100**, shirt **200** is generally formed from multiple joined elements of non-woven textile **100**. As depicted, for example, at least a front area of torso region **201** is formed one element of non-woven textile **100**, and each of arm regions **202** are formed from different elements of non-woven textile **100**. A pair of seams **206** extends between torso region **201** and arm regions **202** in order to join the various elements of non-woven textile **100** together. In general, seams **206** define regions where edge areas of the elements of non-woven textile **100** are heat-bonded with each other. Referring to FIG. **36**A, one of seams **206** is depicted as having the general configuration of seam **106**, but may also have the configuration of seam **107** or another type of seam. Stitching and adhesive bonding may also be utilized to form or supplement seams **206**.

[0132] A second configuration of shirt **200** is depicted in FIGS. **35**B and **36**B. As with the configuration of FIG. **35**A, a majority of shirt **200** is formed from non-woven textile **100**. In order to impart different properties to specific areas of shirt **200**, various fused regions **104** are formed in non-woven textile **100**. More particularly, fused regions **104** are formed around neck opening **203**, waist opening **204**, and each of arm openings **205**. Given that each of openings **203**-**205** may be stretched as shirt **200** is put on an individual and taken off the individual, fused regions **104** are located around openings

203-205 in order to impart greater stretch-resistance to these areas. Filaments **103** in fused regions **104** of shirt **200** are generally fused to a greater degree than filaments **103** in other areas of shirt **200** and may exhibit a non-filamentous configuration, as depicted in FIG. **36**B. Filaments **103** in fused regions **104** of shirt **200** may also exhibit a filamentous configuration or the intermediate configuration. In addition to providing greater stretch-resistance, fused regions **104** impart enhanced durability to the areas around openings **203-205**.

[0133] A third configuration of shirt **200** is depicted in FIGS. **35**C and **36**C as including further fused regions **104**. Given that elbow areas of shirt **200** may be subjected to relatively high abrasion as shirt **200** is worn, some of fused regions **104** may be located in the elbow areas to impart greater durability. Also, backpack straps that extend over shoulder areas of shirt **200** may abrade and stretch the shoulder areas. Additional fused regions **200** are, therefore, located in the shoulder areas of shirt **200** to impart both durability and stretch-resistance. The areas of non-woven textile **100** that are located in the shoulder areas and around seams **206** effectively form both seams **206** and the fused regions **104** in the shoulder areas, as depicted in FIG. **36**C. Two separate processes may be utilized to form these areas. That is, a first heatbonding process may form seams **206**, and a second heating process may form the fused regions **104** in the shoulder areas. As an alternative, however, seams **206** and the fused regions **104** in the shoulder areas may be formed through a single heatbonding/heating process.

[0134] Although the size of fused regions **104** in shirt **200** may vary significantly, some of fused regions **104** generally have a continuous area of at least one square centimeter. As noted above, various embossing or calendaring processes may be utilized during the manufacturing process for non-woven textile **100**. Some embossing or calendaring processes may form a plurality of relatively small areas (i.e., one to ten square millimeters) where filaments **103** are somewhat fused to each other. In contrast with the areas formed by embossing or calendaring, some of fused regions **104** have a continuous area of at least one square centimeter. As utilized herein, "continuous area" or variants thereof is defined as a relatively unbroken or uninterrupted region. As examples, and with reference to FIG. **35**C, the fused region **104** around neck opening **203** individually forms a continuous area, each of the fused regions **104** in the elbow areas of shirt **200** individually form a continuous area, and each of the fused regions **104** in the shoulder areas of shirt **200** individually form a continuous area. All of fused regions **104** (i.e., around neck openings **203-205** and in the shoulder and elbow areas) are not collectively one continuous area because portions of non-woven textile **100** without significant fusing extend between these fused regions **104**.

[0135] A fourth configuration of shirt **200** is depicted in FIGS. **35**D and **36**D. Referring to FIGS. **35**B and **36**B, fused regions **104** are utilized to provide stretch-resistance to the areas around openings **203-205**. Another structure that may be utilized to provide stretch-resistance, as well as a different aesthetic, involves folding non-woven textile **100** and heatbonding or otherwise securing non-woven textile **100** to itself at various bond areas **207**, as generally depicted in FIG. **36**D. Although this structure may be utilized for any of openings **203-205**, bond areas **207** where textile **100** is heatbonded to itself are depicted as extending around waist opening **204** and arm openings **205**.

[0136] A fifth configuration of shirt **200** is depicted in FIGS. **35**E and **36**E. Whereas the configurations of shirt **200** depicted in FIGS. **35**A-**35**D are primarily formed from non-woven textile **100**, arm regions **202** in this configuration of shirt **200** are formed from textile **130**, which is a mechanically-manipulated textile. As discussed above, seams having the configuration of seams **106** and **107** may join non-woven textile **100** with a variety of other materials, including textile **130**. Seams **206** join, therefore, non-woven textile from torso region **201** with elements of textile **130** from arm regions **202**. Utilizing various types of textile materials within shirt **200** may, for example, enhance the comfort, durability, or aesthetic qualities of shirt **200**. Although arm regions **202** are depicted as being formed from textile **130**, other areas may additionally or alternatively be formed form textile **130** or other materials. For example, a lower portion of torso region **201** may be formed from textile **130**, only an area around neck opening **203** may be formed from textile **130**, or the configuration of FIG. **35**E may be reversed such that torso region **201** is formed from textile **130** and each of arm regions **202** are formed from non-woven textile **100**. Although textile **130** is utilized as an example, elements formed from the materials of sheet **140** or foam layer **150** may also be incorporated into shirt **200** and joined with non-woven textile **100**. Accordingly, an article of apparel, such as shirt **200**, may incorporate both non-woven textile **100** and various other textiles or materials. Various fused regions **104** are also formed in the non-woven textile **100** of torso region **201** in order to impart different properties to specific areas of shirt **200** that incorporate non-woven textile **100**.

[0137] A sixth configuration of shirt **200** is depicted in FIGS. **35**F and **36**F, in which a majority of shirt **200** is formed from a composite element of non-woven textile **100** and textile **130**. More particularly, the material forming shirt **200** has a layered structure including an outer layer of non-woven textile **100** and an inner layer of textile **130**. The combination of non-woven textile **100** and textile **130** may impart some advantages over either of non-woven textile **100** and textile **130** alone. For example, textile **130** may exhibit one-directional stretch that imparts one-directional stretch to the composite element. Textile **130** may also be positioned to contact the skin of an individual wearing shirt **200**, and the materials selected for textile **130** and the structure of textile **130** may impart more comfort than non-woven textile **100** alone. As an additional matter, the presence of non-woven textile **100** permits elements to be joined through heatbonding. Referring to FIG. **36**F, surfaces of the composite material that include non-woven textile **100** are heatbonded to each other to join elements from torso region **201** and one of arm regions **202**. Various fused regions **104** are also formed in regions **201** and **202** in order to impart different properties to specific areas of shirt **200**.

[0138] A seventh configuration of shirt **200** is depicted in FIGS. **35**G and **36**G. In order to provide protection to a wearer, various sheets **140** and foam layers **150** are heatbonded to an interior surface of non-woven textile **100**. More particularly, two sheets **140** are located in the shoulder areas of shirt **200**, two sheets **140** are located in arm regions **202**, and two foam layers **150** are located on sides of torso region **201**. Various fused regions **104** are also formed in non-woven textile **100**. More particularly, a pair of fused regions **104** extend around the areas where foam layers **150** are located in torso region **201**, and a pair of fused regions **104** extend over the areas where sheets **140** are located in arm regions **202**.

These fused regions **104** may be utilized to reinforce or add stretch-resistance to areas surrounding foam layers **150** or provide greater durability to areas over sheets **140**, for example.

[0139] An eighth configuration of shirt **200** is depicted in FIGS. **35**H and **36**H. In addition to various fused regions **104** that are formed in non-woven textile **100**, a plurality of strands **160** are also embedded within non-woven textile **100** to, for example, impart stretch-resistance or additional strength to specific areas of shirt **200**. More particularly, seven strands **160** radiate outward and downward from a point in an upper portion of torso region **201**, two strands **160** extend in parallel along each of arm regions **202**, and at least one strand **160** extends across seams **206** in shoulder areas of shirt **200**. Some of strands **160** extend through various fused regions **104** that may impart additional stretch-resistance or durability, for example, to the areas surrounding strands **160**. In torso region **201**, each of strands **160** pass through one of fused regions **104**, while two of strands **160** extend along a pair of fused regions **104**. In the shoulder areas of shirt **200**, a pair of strands **160** are located entirely within fused regions **104**. Accordingly, strands **160** may be utilized alone or coupled with fused regions **104**.

[0140] Based upon the above discussion, non-woven textile **100** may be utilized in an article of apparel, such as shirt **200**. In some configurations, seams **206** having the configuration of either of seams **106** or **107** may be used to join textile elements, including elements of non-woven textile **100**. In order to impart different properties to areas of shirt **200**, various fused regions **104** may be formed, different types of textiles may be incorporated into shirt **200**, and composite elements may be formed by joining one or more of textile **130**, sheet **140**, foam layer **150**, strands **160**, or various other components to non-woven textile **100**. By forming fused regions **104** in non-woven textile **100** and combining non-woven textile **100** with other components to form composite elements, various properties and combinations of properties may be imparted to different areas of shirt **200**. That is, the various concepts disclosed herein may be utilized individually or in combination to engineer the properties of shirt **200** and tailor shirt **200** to a specific purpose. Given that non-woven textile **100** incorporates a thermoplastic polymer material, seams **206** and the composite elements may be formed through heatbonding.

X—PANTS CONFIGURATIONS

[0141] Various configurations of pants **300** are depicted in FIGS. **37**A-**37**C as including a pelvic region **301** and a pair of leg regions **302** that extend downward from pelvic region **301**. Pelvic region **301** corresponds with a lower torso and pelvis bone of a wearer and covers at least a portion of the lower torso when worn. An upper area of pelvic region **301** defines a waist opening **303** through which the torso extends when pants **300** are worn. Leg regions **302** respectively correspond with a right leg and a left leg of the wearer and cover at least a portion of the right leg and the left leg when pants **300** are worn. Each of leg regions **302** define an ankle opening **304** through which the ankle and feet of the wearer protrude when pants **300** are worn. Pants **300** have the configuration of a pants-type garment, particularly a pair of athletic pants. In general, pants-type garments cover the lower torso of the wearer and may extend over legs of the wearer. In further examples, apparel having the general structure of pants **300** may have the configuration of other pants-type garments, including shorts, jeans, briefs, swimsuits, and undergarments.

[0142] A first configuration of pants **300** is depicted in FIG. **37**A. A majority of pants **300** is formed from non-woven textile **100**. More particularly, pelvic region **301** and each of leg regions **302** are primarily formed from non-woven textile **100**. Although pants **300** may be formed from a single element of non-woven textile **100**, pants **300** is generally formed from multiple joined elements of non-woven textile **100**. Although not depicted, seams similar to seams **106**, **107**, or **206** may be utilized to join the various elements of non-woven textile **100** together. Stitching and adhesive bonding may also be utilized to form or supplement the seams.

[0143] A pocket **305** is formed in pants **300** and may be utilized to hold or otherwise contain relatively small objects (e.g., keys, wallet, identification card, mobile phone, portable music player). Two overlapping layers of non-woven textile **100** are utilized to form pocket **305**, as depicted in FIG. **38**. More particularly, a bond area **306** is utilized to heatbond the layers of non-woven textile **100** to each other. A central area of one of the layers of non-woven textile **100** remains unbonded, however, to form the areas within pocket **305** for containing the objects. A pocket similar to pocket **305** may also be formed in other products and articles of apparel, including shirt **200**.

[0144] A second configuration of pants **300** is depicted in FIG. **37**B. As with the configuration of FIG. **37**A, a majority of pants **300** is formed from non-woven textile **100**. In order to impart different properties to specific areas of pants **300**, various fused regions **104** are formed in non-woven textile **100**. More particularly, fused regions **104** are formed around waist opening **303** and each of leg openings **304**. Another fused region **104** is formed at an opening for pocket **305**. Given that each of openings **303** and **304**, as well as the opening to pocket **305**, may be stretched, fused regions **104** may be utilized to impart greater stretch-resistance to these areas. That is, filaments **103** in fused regions **104** of pants **300** are generally fused to a greater degree than filaments **103** in other areas of pants **300** and may have any of the filamentous, non-filamentous, or intermediate configurations discussed above. In addition to providing greater stretch-resistance, fused regions **104** impart enhanced durability. Given that knee areas of pants **300** may be subjected to relatively high abrasion as pants **300** are worn, additional fused regions **104** may be located in the knee areas to impart greater durability.

[0145] A third configuration of pants **300** is depicted in FIG. **37**C. As with shirt **200**, fused regions **104**, textile **130**, sheet **140**, foam layer **150**, and strands **160** may be utilized to impart properties to various areas of pants **300**. In leg regions **302**, for example, textile **130** is heatbonded to an interior surface of non-woven textile **100**. A pair of sheets **140** are heatbonded to pants **300** in side areas of pelvic region **301**, and portions of the fused region **104** around waist opening **303** extend under sheets **140**. A pair of foam layers **150** are also located in the knee areas of pants **300**, and strands **160** that extend along leg regions **302** extend under foam layers **150** (e.g., between non-woven textile **100** and foam layers **150**). End areas of strands **160** also extend into fused regions **104** in lower areas of leg regions **302**. Accordingly, fused regions **104**, textile **130**, sheet **140**, foam layer **150**, and strands **160** may be utilized or combined in a variety of ways to impart properties to different various areas of pants **300**. Whereas various elements of sheet **140** and foam layer **150**

are heatbonded with an interior surface of shirt **200** in FIG. **35**G, various elements of sheet **140** and foam layer **150** are heatbonded with an exterior surface of pants **300** in FIG. **37**C. Depending upon various structural and aesthetic factors, composite elements and apparel including the composite elements may be formed with components (e.g., textile **130**, sheet **140**, foam layer **150**, strands **160**) located on an exterior or an interior of non-woven textile **100**.

[0146] Based upon the above discussion, non-woven textile **100** may be utilized in an article of apparel, such as pants **300**. Seams of various types may be used to join textile elements, including elements of non-woven textile **100**. In order to impart different properties to areas of pants **300**, various fused regions **104** may be formed, different types of textiles may be incorporated into shirt **200**, and composite elements may be formed by joining one or more of textile **130**, sheet **140**, foam layer **150**, strands **160**, or various other components to non-woven textile **100**. By forming fused regions **104** in non-woven textile **100** and combining non-woven textile **100** with other components to form composite elements, various properties and combinations of properties may be imparted to different areas of pants **300**. That is, the various concepts disclosed herein may be utilized individually or in combination to engineer the properties of pants **300** and tailor pants **300** to a specific purpose. Given that non-woven textile **100** incorporates a thermoplastic polymer material, the seams and composite elements may be formed through heatbonding.

XI—FOOTWEAR CONFIGURATIONS

[0147] Various configurations of footwear **400** are depicted in FIGS. **39**A-**39**G as including a sole structure **410** and an upper **420**. Sole structure **410** is secured to upper **420** and extends between the foot of a wearer and the ground when footwear **400** is placed upon the foot. In addition to providing traction, sole structure **410** may attenuate ground reaction forces when compressed between the foot and the ground during walking, running, or other ambulatory activities. As depicted, sole structure **410** includes a fluid-filled chamber **411**, a reinforcing structure **412** that is bonded to and extends around an exterior of chamber **411**, and an outsole **413** that is secured to a lower surface of chamber **411**, which is similar to a sole structure that is disclosed in U.S. Pat. No. 7,086,179 to Dojan, et al., which is incorporated by reference herein. The configuration of sole structure **410** may vary significantly to include a variety of other conventional or nonconventional structures. As an example, sole structure **410** may incorporate a polymer foam element in place of chamber **411** and reinforcing structure **412**, and the polymer foam element may at least partially encapsulate a fluid-filled chamber, as disclosed in either of U.S. Pat. Nos. 7,000,335 to Swigart, et al. and 7,386,946 to Goodwin, which are incorporated by reference herein. As another example, sole structure **410** may incorporate a fluid-filled chamber with an internal foam tensile member, as disclosed in U.S. Pat. No. 7,131,218 to Schindler, which is incorporated by reference herein. Accordingly, sole structure **410** may have a variety of configurations.

[0148] Upper **420** defines a void within footwear **400** for receiving and securing the foot relative to sole structure **410**. More particularly, upper **420** is structured to extend along a lateral side of the foot, along a medial side of the foot, over the foot, and under the foot, such that the void within upper **420** is shaped to accommodate the foot. Access to the void is provided by an ankle opening **421** located in at least a heel region of footwear **400**. A lace **422** extends through various lace apertures **423** in upper **420** and permits the wearer to modify dimensions of upper **420** to accommodate the proportions of the foot. Lace **422** also permits the wearer to loosen upper **420** to facilitate entry and removal of the foot from the void. Although not depicted, upper **420** may include a tongue that extends under lace **422** to enhance the comfort or adjustability of footwear **400**.

[0149] A first configuration of footwear **400** is depicted in FIGS. **39**A and **40**A. Portions of upper **420** that extend along sides of the foot, over the foot, and under the foot may be formed from various elements of non-woven textile **100**. Although not depicted, seams similar to seams **106** and **107** may be used to join the elements of non-woven textile **100**. In many articles of footwear, stitching or adhesives are utilized to join the upper and sole structure. Sole structure **410**, however, may be at least partially formed from a thermoplastic polymer material. More particularly, chamber **411** and reinforcing structure **412** may be at least partially formed from a thermoplastic polymer material that joins to upper **420** with a heatbond. That is, a heatbonding process may be utilized to join sole structure **410** and upper **420**. In some configurations, stitching or adhesives may be utilized to join sole structure **410** and upper **420**, or the heatbond may be supplemented with stitching or adhesives.

[0150] A relatively large percentage of footwear **400** may be formed from thermoplastic polymer materials. As discussed above, non-woven textile **100**, chamber **411**, and reinforcing structure **412** may be at least partially formed from thermoplastic polymer materials. Although lace **422** is not generally joined to upper **420** through bonding or stitching, lace **422** may also be formed from a thermoplastic polymer material. Similarly, outsole **413** may also be formed from a thermoplastic polymer material. Depending upon the number of elements of footwear **400** that incorporate thermoplastic polymer materials or are entirely formed from thermoplastic polymer materials, the percentage by mass of footwear **400** that is formed from the thermoplastic polymer materials may range from thirty percent to one-hundred percent. In some configurations, at least sixty percent of a combined mass of upper **420** and sole structure **410** may be from the thermoplastic polymer material of non-woven textile **100** and thermoplastic polymer materials of at least one of (a) other elements of upper **420** (i.e., lace **422**) and (b) the elements of sole structure **410** (i.e., chamber **411**, reinforcing structure **412**, outsole **413**). In further configurations, at least eighty percent or even at least ninety percent of a combined mass of upper **420** and sole structure **410** may be from the thermoplastic polymer material of non-woven textile **100** and thermoplastic polymer materials of at least one of (a) other elements of upper **420** and (b) the elements of sole structure **410**. Accordingly, a majority or even all of footwear **400** may be formed from one or more thermoplastic polymer materials.

[0151] A second configuration of footwear **400** is depicted in FIGS. **39**B and **40**B, in which three generally linear fused regions **104** extend from a heel area to a forefoot area of footwear **400**. As discussed in detail above, the thermoplastic polymer material forming filaments **103** of non-woven textile **100** is fused to a greater degree in fused regions **104** than in other areas of non-woven textile **100**. The thermoplastic polymer material from filaments **103** may also be fused to form a non-filamentous portion of non-woven textile **100**. The three fused regions **104** form, therefore, areas where filaments **103** are fused to a greater degree than in other areas of upper **420**. Fused regions **104** have generally greater stretch-resistance

than other areas of non-woven textile **100**. Given that fused regions **104** extend longitudinally between the heel area and the forefoot area of footwear **400**, fused regions **104** may reduce the amount of longitudinal stretch in footwear **400**. That is, fused regions **104** may impart greater stretch-resistance to footwear **400** in the direction between the heel area and the forefoot area. Fused regions **104** may also increase the durability of upper **420** and decrease the permeability of upper **420**.

[0152] A third configuration of footwear **400** is depicted in FIGS. **39**C and **40**C. Various fused regions **104** are formed in non-woven textile **100**. One of fused regions **104** extends around and is proximal to ankle opening **421**, which may add greater stretch-resistance to the area around ankle opening **421** and assists with securely-retaining the foot within upper **420**. Another fused region **104** is located in the heel region and extends around a rear area of the footwear to form a heel counter that resists movement of the heel within upper **420**. A further fused region **104** is located in the forefoot area and adjacent to the sole structure, which adds greater durability to the forefoot area. More particularly, the forefoot area of upper **420** may experience greater abrasive-wear than other portions of upper **420**, and the addition to fused region **104** in the forefoot area may enhance the abrasion-resistance of footwear **400** in the forefoot area. Additional fused regions **104** extend around some of lace apertures **423**, which may enhance the durability and stretch-resistance of areas that receive lace **422**. Fused regions **104** also extend downward from an area that is proximal to lace apertures **423** to an area that is proximal to sole structure **410** in order to enhance the stretch-resistance along the sides of footwear **400**. More particularly, tension in lace **422** may place tension in the sides of upper **420**. By forming fused regions **104** that extend downward along the sides of upper **420**, the stretch in upper **420** may be reduced.

[0153] The size of fused regions **104** in footwear **400** may vary significantly, but fused regions **104** generally have a continuous area of at least one square centimeter. As noted above, various embossing or calendaring processes may be utilized during the manufacturing process for non-woven textile **100**. Some embossing or calendaring processes may form a plurality of relatively small areas (i.e., one to ten square millimeters) where filaments **103** are somewhat fused to each other. In contrast with the areas formed by embossing or calendaring, fused regions **104** have a continuous area, as defined above, of at least one square centimeter.

[0154] Although a majority of upper **420** may be formed from a single layer of non-woven textile **100**, multiple layers may also be utilized. Referring to FIG. **40**C, upper **420** includes an intermediate foam layer **150** between two layers of non-woven textile **100**. An advantage to this configuration is that foam layer imparts additional cushioning to the sides of upper **420**, thereby protecting and imparting greater comfort to the foot. In general, the portions of upper **420** that incorporate foam layer **150** may be formed to have the general configuration of the composite element discussed above relative to FIGS. **19** and **20**. Moreover, a heatbonding process similar to the process discussed above relative to FIGS. **12**A-**12**C may be utilized to form the portions of upper **420** that incorporate foam layer **150**. As an alternative to foam layer **150**, textile **130** or sheet **140** may also be heatbonded to non-woven textile **100** in footwear **400**. Accordingly, incorporating various composite elements into footwear **400** may impart a layered configuration with different properties.

[0155] A fourth configuration of footwear **400** is depicted in FIGS. **39**D and **40**D, in which various strands **160** are embedded within non-woven textile **100**. In comparison with the thermoplastic polymer material forming non-woven textile **100**, many of the materials noted above for strands **160** exhibit greater tensile strength and stretch-resistance. That is, strands **160** may be stronger than non-woven textile **100** and may exhibit less stretch than non-woven textile **100** when subjected to a tensile force. When utilized within footwear **400**, therefore, strands **160** may be utilized to impart greater strength and stretch-resistance than non-woven textile **100**.

[0156] Strands **160** are embedded within non-woven textile **100** or otherwise bonded to non-woven textile **100**. Many of strands **160** extend in a direction that is substantially parallel to a surface of non-woven textile **100** for a distance of at least five centimeters. An advantage to forming at least some of strands **160** to extend through the distance of at least five centimeters is that tensile forces upon one area of footwear **400** may be transferred along strands **160** to another area of footwear **400**. One group of strands **160** extends from the heel area to the forefoot area of footwear **400** to increase strength and reduce the amount of longitudinal stretch in footwear **400**. That is, these strands **160** may impart greater strength and stretch-resistance to footwear **400** in the direction between the heel area and the forefoot area. Another group of strands **160** extends downward from an area that is proximal to lace apertures **423** to an area that is proximal to sole structure **410** in order to enhance the strength and stretch-resistance along the sides of footwear **400**. More particularly, tension in lace **422** may place tension in the sides of upper **420**. By positioning strands **160** to extend downward along the sides of upper **420**, the stretch in upper **420** may be reduced, while increasing the strength. A further group of strands **160** is also located in the heel region to effectively form a heel counter that enhances the stability of footwear **400**. Additional details concerning footwear having a configuration that includes strands similar to strands **160** are disclosed in U.S. Patent Application Publication US2007/0271821 to Meschter, which is incorporated by reference herein.

[0157] A fifth configuration of footwear **400** is depicted in FIG. **39**E. In contrast with the configuration of FIGS. **39**D and **40**D, various fused regions **104** are formed in non-woven textile **100**. More particularly, fused regions **104** are located in the areas of the groups of strands **160** that (a) extend downward from an area that is proximal to lace apertures **423** to an area that is proximal to sole structure **410** and (b) are located in the heel region. At least a portion of strands **160** extend through the fused regions **104**, which imparts additional stretch-resistance and greater durability to the areas of upper **420** that incorporate strands **160**, thereby providing greater protection to strands **160**. Fused regions **104** may have a continuous area of at least one square centimeter, and the thermoplastic polymer material from filaments **103** within fused regions **104** may be either, filamentous, non-filamentous, or a combination of filamentous and non-filamentous.

[0158] A sixth configuration of footwear **400** is depicted in FIG. **39**F. Three fused regions **104** in the side of footwear **400** have the shapes of the letters "A," "B," and "C." As discussed above, fused regions **104** may be utilized to modify various properties of non-woven textile **100**, including the properties of permeability, durability, and stretch-resistance. In general, various aesthetic properties may also be modified by forming fused regions **104**, including the transparency and the dark-

ness of a color of non-woven textile **100**. That is, the color of fused regions **104** may be darker than the color of other portions of non-woven textile **100**. Utilizing this change in aesthetic properties, fused regions **104** may be utilized to form indicia in areas of footwear **400**. That is, fused regions **104** may be utilized to form a name or logo of a team or company, the name or initials of an individual, or an esthetic pattern, drawing, or element in non-woven textile **100**. Similarly, fused regions **104** may be utilized to form indicia in shirt **200**, pants **300**, or any other product incorporating non-woven textile **100**.

[0159] Fused regions **104** may be utilized to form indicia in the side of footwear **400**, as depicted in FIG. **39**F, and also in shirt **200**, pants **300**, or a variety of other products incorporating non-woven textile **100**. As a related matter, elements of non-woven textile **100** may be heatbonded or otherwise joined to various products to form indicia. For example, elements of non-woven textile **100** having the shapes of the letters "A," "B," and "C" may be heatbonded to the sides of an article of footwear where the upper is primarily formed from synthetic leather. Given that non-woven textile **100** may be heatbonded to a variety of other materials, elements of non-woven textile **100** may be heatbonded to products in order to form indicia.

[0160] Seams similar to seams **106** and **107** may be used to join the elements of non-woven textile **100** in any configuration of footwear **400**. Referring to FIG. **39**F, a pair of seams **424** extend in a generally diagonal direction through upper **420** to join different elements of non-woven textile **100**. Although heatbonding may be utilized to form seams **424**, stitching or adhesives may also be utilized. As noted above, sole structure **410** may also have various structures, in addition to the structure that includes chamber **411** and reinforcing structure **412**. Referring again to FIG. **39**F, a thermoplastic polymer foam material **425** is utilized in place of chamber **411** and reinforcing structure **412**, and upper **420** may be heatbonded to foam material **425** to join sole structure **410** to upper **420**. Heatbonds may also be utilized when a thermoset polymer foam material is utilized within sole structure **410**.

[0161] A seventh configuration of footwear **400** is depicted in FIG. **39**G, wherein non-woven textile **100** is utilized to form a pair of straps **426** that replace or supplement lace **422**. In general, straps **426** permit the wearer to modify dimensions of upper **420** to accommodate the proportions of the foot. Straps **426** also permit the wearer to loosen upper **420** to facilitate entry and removal of the foot from the void. One end of straps **426** may be permanently secured to upper **420**, whereas a remainder of straps **426** may be joined with a hook-and-loop fastener, for example. This configuration allows straps to be adjusted by the wearer. As discussed above, non-woven textile **100** may stretch and return to an original configuration after being stretched. Utilizing this property, the wearer may stretch straps **426** to impart tension, thereby tightening upper **420** around the foot. By lifting straps, the tension may be released to allow entry and removal of the foot.

[0162] In addition to forming the portion of upper **420** that extends along and around the foot to form the void for receiving the foot, non-woven textile **100** may also form structural elements of footwear **400**. As an example, a lace loop **427** is depicted in FIG. **41**. Lace loop **427** may be incorporated into upper **420** as a replacement or alternative for one or more of the various lace apertures **423**. Whereas lace apertures **423** are openings through upper **420** that receive lace **422**, lace loop **427** is a folded or overlapped area of non-woven textile **100** that defines a channel through which lace **422** extends. In forming lace loop **427**, non-woven textile **100** is heatbonded to itself at a bond area **428** to form the channel.

[0163] Based upon the above discussion, non-woven textile **100** may be utilized in apparel having the configuration of an article of footwear, such as footwear **400**. In order to impart different properties to areas of footwear **400**, various fused regions **104** may be formed, different types of textiles may be incorporated into footwear **400**, and composite elements may be formed by joining one or more of textile **130**, sheet **140**, foam layer **150**, strands **160**, or various other components to non-woven textile **100**. Given that non-woven textile **100** incorporates a thermoplastic polymer material, a heatbonding process may be utilized to join upper **420** to sole structure **410**.

XII—FORMING, TEXTURING, AND COLORING THE NON-WOVEN TEXTILE

[0164] The configuration of non-woven textile **100** depicted in FIG. **1** has a generally planar configuration. Non-woven textile **100** may also exhibit a variety of three-dimensional configurations. As an example, non-woven textile **100** is depicted as having a wavy or undulating configuration in FIG. **42**A. A similar configuration with squared waves is depicted in FIG. **42**B. As another example, non-woven textile may have waves that extend in two directions to impart an egg crate configuration, as depicted in FIG. **42**C. Accordingly, non-woven textile **100** may be formed to have a variety of non-planar or three-dimensional configurations.

[0165] A variety of processes may be utilized to form a three-dimensional configuration in non-woven textile **100**. Referring to FIGS. **43**A-**43**C, an example of a method is depicted as involving first plate **111** and second plate **112**, which each have surfaces that correspond with the resulting three-dimensional aspects of non-woven textile **100**. Initially, non-woven textile **100** is located between plates **111** and **112**, as depicted in FIG. **43**A. Plates **111** and **112** then translate or otherwise move toward each other in order to contact and compress non-woven textile **100**, as depicted in FIG. **43**B. In order to form the three-dimensional configuration in non-woven textile **100**, heat from one or both of plates **111** and **112** is applied to non-woven textile **100** so as to soften or melt the thermoplastic polymer material within filaments **103**. Upon separating plates **111** and **112**, as depicted in FIG. **43**C, non-woven textile **100** exhibits the three-dimensional configuration from the surfaces of plates **111** and **112**. Although heat may be applied through conduction, radio frequency or radiant heating may also be used. As another example of a process that may be utilized to form a three-dimensional configuration in non-woven textile **100**, filaments **103** may be directly deposited upon a three-dimensional surface in the process for manufacturing non-woven textile **100**.

[0166] In addition to forming non-woven textile **100** to have three-dimensional aspects, a texture may be imparted to one or both of surfaces **101** and **102**. Referring to FIG. **44**A, non-woven textile **100** has a configuration wherein first surface **101** is textured to include a plurality of wave-like features. Another configuration is depicted in FIG. **44**B, wherein first surface **101** is textured to include a plurality of x-shaped features. Textures may also be utilized to convey information, as in the series of alpha-numeric characters that are formed in first surface **101** in FIG. **44**C. Additionally, textures may be

utilized to impart the appearance of other materials, such as the synthetic leather texture in FIG. **44**D.

[0167] A variety of processes may be utilized to impart a texture to non-woven textile **100**. Referring to FIGS. **45**A-**45**C, an example of a method is depicted as involving first plate **111** and second plate **112**, which each have textured surfaces. Initially, non-woven textile **100** is located between plates **111** and **112**, as depicted in FIG. **45**A. Plates **111** and **112** then translate or otherwise move toward each other in order to contact and compress non-woven textile **100**, as depicted in FIG. **45**B. In order to impart the textured configuration in non-woven textile **100**, heat from one or both of plates **111** and **112** is applied to non-woven textile **100** so as to soften or melt the thermoplastic polymer material within filaments **103**. Upon separating plates **111** and **112**, as depicted in FIG. **45**C, non-woven textile **100** exhibits the texture from the surfaces of plates **111** and **112**. Although heat may be applied through conduction, radio frequency or radiant heating may also be used. As another example of a process that may be utilized to form textured surfaces in non-woven textile **100**, a textured release paper may be placed adjacent to non-woven textile **100**. Upon compressing and heating, the texture from the release paper may be transferred to non-woven textile **100**.

[0168] Depending upon the type of polymer material utilized for non-woven textile **100**, a variety of coloring processes may be utilized to impart color to non-woven textile **100**. Digital printing, for example, may be utilized to deposit dye or a colorant onto either if surfaces **101** and **102** to form indicia, graphics, logos, or other aesthetic features. Instructions, size identifiers, or other information may also be printed onto non-woven textile **100**. Moreover, coloring processes may be utilized before or after non-woven textile **100** is incorporated into a product. Other coloring processes, including screen printing and laser printing, may be used to impart colors or change the overall color of portions of non-woven textile **100**.

[0169] Based upon the above discussion, three-dimensional, textured, and colored configurations of non-woven textile **100** may be formed. When incorporated into products (e.g., shirt **200**, pants **300**, footwear **400**), these features may provide both structural and aesthetic enhancements to the products. For example, the three-dimensional configurations may provide enhanced impact force attenuation and greater permeability by increasing surface area. Texturing may increase slip-resistance, as well as providing a range of aesthetic possibilities. Moreover, coloring non-woven textile **100** may be utilized to convey information and increase the visibility of the products.

XIII—STITCH CONFIGURATIONS

[0170] Stitching may be utilized to join an element of non-woven textile **100** to other elements of non-woven textile **100**, other textiles, or a variety of other materials. As discussed above, stitching may be utilized alone, or in combination with heatbonding or adhesives to join non-woven textile **100**. Additionally, stitching, embroidery, or stitchbonding may be used to form a composite element and provide structural or aesthetic elements to non-woven textile **100**. Referring to FIG. **46**A, a thread **163** is stitched into non-woven textile **100** to form a plurality of parallel lines that extend across non-woven textile **100**. Whereas strands **160** extend in a direction that is substantially parallel to either of surfaces **101** and **102**, thread **163** repeatedly extends between surfaces **101** and **102** (i.e., through non-wove textile **100**) to form a stitched configuration. Like strand **160**, however, thread **163** may impart stretch-resistance and enhance the overall strength of non-woven textile **100**. Thread **163** may also enhance the overall aesthetics of non-woven textile **100**. When incorporated into products having non-woven textile **100** (e.g., shirt **200**, pants **300**, footwear **400**), thread **163** may provide both structural and aesthetic enhancements to the products.

[0171] Thread **163** may be stitched to provide a variety of stitch configurations. As an example, thread **163** has the configuration of a zigzag stitch in FIG. **46**B and the configuration of a chain stitch in FIG. **46**C. Whereas thread **163** forms generally parallel lines of stitches in FIGS. **46**A and **46**B, the stitches formed by thread **163** are non-parallel and cross each other in FIG. **46**C. Thread **163** may also be embroidered to form various configurations, as depicted in FIG. **46**D. Stitching may also be utilized to form more complicated configurations with thread **163**, as depicted in FIG. **46**E. Non-woven textile **100** may also include various fused regions **104**, with the stitches formed by thread **163** extending through both fused and non-fused areas of non-woven textile **100**, as depicted in FIG. **46**F. Accordingly, thread **163** may be utilized to form a variety of stitch types that may impart stretch-resistance, enhance strength, or enhance the overall aesthetics of non-woven textile **100**. Moreover, fused regions **104** may also be formed in non-woven textile **100** to modify other properties.

XIV—ADHESIVE TAPE

[0172] An element of tape **170** is depicted in FIGS. **47** and **48** as having the configuration of a composite elements that includes non-woven textile **100** and an adhesive layer **171**. Tape **170** may be utilized for a variety of purposes, including as packing tape, as painting tape, or as medical or therapeutic tape. An advantage to utilizing tape **170** as medical or therapeutic tape, for example, is that the permeability and stretch-resistance, among other properties, may be controlled. With regard to permeability, when tape **170** to be adhered to the skin of an individual (i.e., with adhesive layer **171**), air and water may pass through tape **170** to impart breathability and allow the underlying skin to be washed or otherwise cleansed. Tape **170** may also resist stretch when adhered to the skin of the individual to provide support for surrounding soft tissue. Examples of suitable materials for adhesive layer **171** include any of the conventional adhesives utilized in tape-type products, including medical-grade acrylic adhesive.

[0173] A variety of structures that be utilized to impart specific degrees of stretch-resistance to tape **170**. As an example, the stretch-resistance to tape **170** may be controlled though the thickness of non-woven textile **100** or the materials forming filaments **103** in non-woven textile **100**. Referring to FIG. **49**A, fused regions **104** may also be formed in tape **170** to control stretch-resistance. Strands **160** may also be incorporated into tape **170** to impart a higher level of stretch-resistance, as depicted in FIG. **49**B. Additionally, some configurations of tape **170** may include both fused regions **104** and strands **160**, as depicted in FIG. **49**C.

XV—RECYCLING THE NON-WOVEN TEXTILE

[0174] Filaments **103** of non-woven textile **100** include a thermoplastic polymer material. In some configurations of non-woven textile **100**, a majority or substantially all of filaments **103** are formed from the thermoplastic polymer mate-

rial. Given that many configurations of shirt **200** and pants **300** are primarily formed from non-woven textile **100**, then a majority or substantially all of shirt **200** and pants **300** are formed from the thermoplastic polymer material. Similarly, a relatively large percentage of footwear **400** may also be formed from thermoplastic polymer materials. Unlike many articles of apparel, the materials of shirt **200**, pants **300**, and footwear **400** may be recycled following their useful lives.

[0175] Utilizing shirt **200** as an example, the thermoplastic polymer material from shirt **200** may be extracted, recycled, and incorporated into another product (e.g., apparel, container, upholstery) as a non-woven textile, a polymer foam, or a polymer sheet. This process is generally shown in FIG. **50**, in which shirt **200** is recycled in a recycling center **180**, and thermoplastic polymer material from shirt **200** is incorporated into one or more of another shirt **200**, pants **300**, or footwear **400**. Moreover, given that a majority or substantially all of shirt **200** is formed from the thermoplastic polymer material, then a majority or substantially all of the thermoplastic polymer material may be utilized in another product following recycling. Although the thermoplastic polymer material from shirt **200** was initially utilized within non-woven textile **100**, for example, the thermoplastic polymer material from shirt **200** may be subsequently utilized in another element of non-woven textile **100**, another textile that includes a thermoplastic polymer material, a polymer foam, or a polymer sheet. Pants **300**, footwear **400**, and other products incorporating non-woven textile **100** may be recycled through a similar process. Accordingly, an advantage of forming shirt **200**, pants **300**, footwear **400**, or other products with the various configurations discussed above relates to recyclability.

XVI—CONCLUSION

[0176] Non-woven textile **100** includes a plurality of filaments **103** that are at least partially formed from a thermoplastic polymer material. Various fused regions **104** may be formed in non-woven textile **100** to modify properties that include permeability, durability, and stretch-resistance. Various components (textiles, polymer sheets, foam layers, strands) may also be secured to or combined with non-woven textile **100** (e.g., through heatbonding) to impart additional properties or advantages to non-woven textile **100**. Moreover, fused regions **104** and the components may be combined to impart various configurations to non-woven textile **100**.

[0177] The invention is disclosed above and in the accompanying figures with reference to a variety of configurations. The purpose served by the disclosure, however, is to provide an example of the various features and concepts related to the invention, not to limit the scope of the invention. One skilled in the relevant art will recognize that numerous variations and modifications may be made to the configurations described above without departing from the scope of the present invention, as defined by the appended claims.

1-10. (canceled)

11. An article of apparel comprising at least one non-woven textile element that includes a plurality of filaments at least partially formed from a thermoplastic polymer material, the non-woven textile having a first region and a second region, each of the first region and the second region having a continuous area of at least one square centimeter, and the thermoplastic polymer material from filaments of the first region being fused to form a non-filamentous portion of the non-woven textile.

12. The article of apparel recited in claim **11**, wherein the article of apparel is a shirt-type garment.

13. The article of apparel recited in claim **12**, wherein the first region is located in a shoulder area of the shirt-type garment.

14. The article of apparel recited in claim **12**, wherein the first region is located around at least one of a neck opening, an arm opening, and a waist opening of the shirt-type garment.

15. The article of apparel recited in claim **11**, wherein the article of apparel is a pants-type garment.

16. The article of apparel recited in claim **15**, wherein the first region is located in a knee area of the pants-type garment.

17. The article of apparel recited in claim **15**, wherein the first region is located around at least one of a waist opening and a leg opening of the pants-type garment.

18. The article of apparel recited in claim **11**, wherein the thermoplastic polymer filaments stretch at least one-hundred percent prior to tensile failure.

19. The article of apparel recited in claim **11**, wherein the article of apparel also includes a second textile element, an edge area of the non-woven textile element being heatbonded with an edge area of the second textile element.

20. The article of apparel recited in claim **11**, wherein the article of apparel is an article of footwear.

21-115. (canceled)

* * * * *