Dec. 22, 1964 R. M. BAUMAN 3,161,891

PORTABLE URINE SPECIMEN COLLECTING DEVICE

Filed Dec. 12, 1963 2 Sheets-Sheet 1

FIG. 1

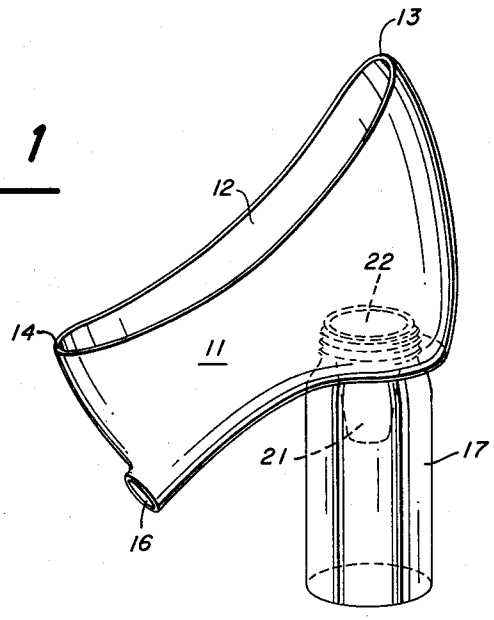

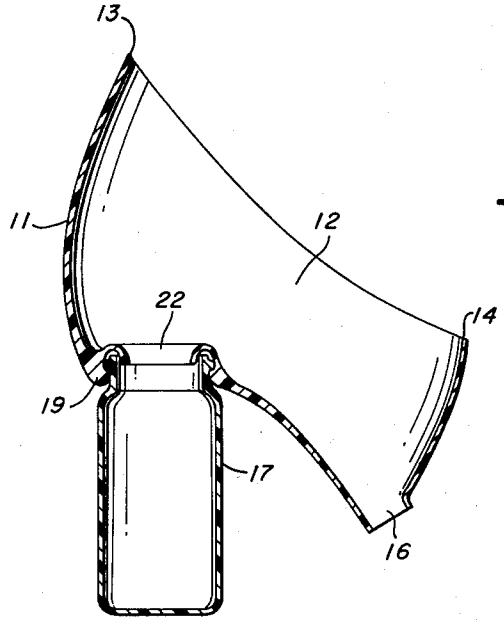

FIG. 5

INVENTOR.
RALPH M. BAUMAN

BY

Dec. 22, 1964 R. M. BAUMAN 3,161,891

PORTABLE URINE SPECIMEN COLLECTING DEVICE

Filed Dec. 12, 1963 2 Sheets-Sheet 2

FIG. 2

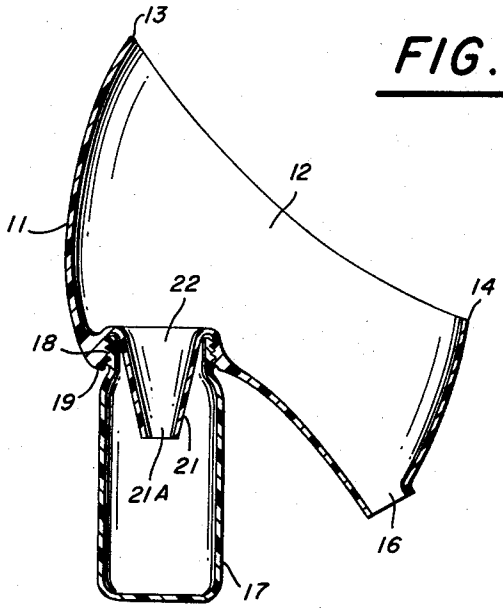

FIG. 3

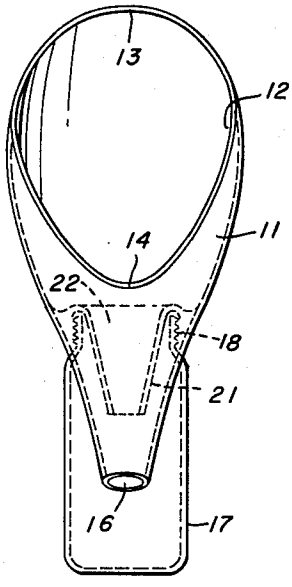

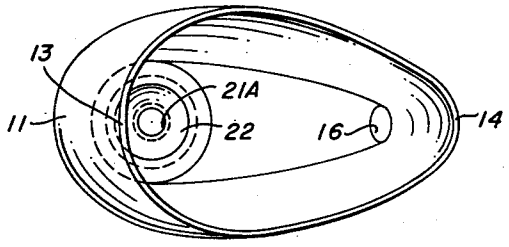

FIG. 4

INVENTOR.
RALPH M. BAUMAN

BY

United States Patent Office 3,161,891
Patented Dec. 22, 1964

3,161,891

PORTABLE URINE SPECIMEN COLLECTING DEVICE

Ralph M. Bauman, 7845 Lake Adlon Drive, San Diego, Calif.

Filed Dec. 12, 1963, Ser. No. 330,165
7 Claims. (Cl. 4—110)

The present invention relates to a portable urine specimen collecting device and more particularly to a portable urine specimen collecting device which is contoured and is equipped with an overflow drain.

According to the invention, a funnel member having a top opening contoured for a snug fit over a female's pelvic area is provided with a first bottom opening designed for cooperation with a standard urine specimen container, and a second opening which provides an overflow outlet when the specimen container is full. The first opening can be threaded for a threadable engagement with the urine specimen container or it can be constructed of plastic, for example, and designed for a press fit to a glass or plastic container. Another novel feature lies in a funnel shaped extension of the first opening which automatically sets the level of the specimen which is collected in the specimen container.

An object of the present invention is the provision of a portable urine specimen collecting device for females in which a top opening is contoured for a snug fit over the user's pelvic area.

Another object is to provide a portable urine specimen collecting device for females which has a drain for cooperation with a standard urine specimen container.

A further object of the invention is the provision of a portable urine specimen collecting device for females which is provided with an overflow drain.

Still another object is to provide a portable urine specimen collecting device for females which is compact, simple to manufacture and convenient to use.

Other objects and many of the attendant advantages of this invention will be readily appreciated as the same becomes better understood by reference to the following detailed description when considered in connection with the accompanying drawing in which like reference numerals designate like parts throughout the figures thereof and wherein:

FIG. 1 is a perspective view of a preferred embodiment of the present invention showing a container attached thereto;

FIG. 2 is a side view of a preferred embodiment of the present invention;

FIG. 3 is an end view of FIG. 2; and

FIG. 4 is a top view of FIG. 2; and

FIG. 5 illustrates a portion of another embodiment of the present invention.

Referring to FIG. 1, funnel member **11** is shown generally having top opening **12** with raised front edge **13** and lowered back edge **14**, and bottom drain opening **16** attached to specimen container **17**.

Referring to FIG. 2, funnel member **11** again has opening **12**, with raised front edge **13** and lowered back edge **14** and bottom overflow opening **16**. Specimen container **17** is threadably attached at threads **18** to annular extension **19** of funnel member **11**. Funnel shaped extension **21** extends from bottom opening **22** of funnel member **11** into container **17**.

Referring to FIG. 3, funnel member **11** is shown as having contoured top opening **12** with raised front edge **13** and lowered rear edge **14**, and bottom drain opening **16**. Container **17** is threadably attached to threads **18** on annular extension **19** of funnel member **11**. Funnel shaped extension **21** again extends from bottom opening **22** into container **17**.

Referring to FIG. 4, funnel member **11** is again shown with top opening **12** having raised front edge **13** and lowered back edge **14**, rear bottom drain opening **16**, front bottom opening **22**, and bottom opening **21***a* of funnel shaped extension **21**.

Referring to FIG. 5, a second embodiment of the invention is shown in the same view as FIG. 2, the only difference being a press fit of container **17** at annular extension **19** instead of being threadably engaged therewith.

Referring back to FIG. 1, the female user will hold funnel member **11** with raised edge **13** toward the front of the user, and lower edge **14** toward the back of the user. The opening **12** is contoured for a snug fit over the pelvic area, and, when placed in position for use, will be tipped slightly forward i.e., edge **13** will be moved downward and edge **14** will be raised. When the funnel shaped extension **21** is utilized the urine will fill container **17** through opening **22** and down through extension **21** until an air pocket forms around funnel shaped extension **21** at the top of the container **17**. When this happens the unnecessary urine will be passed down through bottom opening **16** (which may have a hose attached in certain instances) and into a waste receptacle.

When no further urine is entering opening **12**, the entire assembly is then moved into the position shown in FIG. 2. Any excess urine remaining in extension **21** can then be poured off through opening **16**, and funnel member **11** unscrewed from container **17**. At this time any remaining urine caught in funnel shaped extension **21** will fill up the rest of container **17** and a lid (not shown) can be placed over container **17**.

If funnel shaped extension **21** is not included with funnel member **11**, as shown in FIG. 5, the specimen container **17** will fill up over opening **22** and in this instance the entire unit will have to be tipped to the right to empty sufficient urine out of opening **16** for easy removal of funnel member **11** from container **17** without spillage.

A further modification of the invention is shown in FIG. 5 which is constructed preferably of a plastic for a press fit of annular extension **19** over container **17**.

It should be understood, of course, that the foregoing disclosure relates to only a preferred embodiment of the invention and that it is intended to cover all changes and modifications of the examples of the invention herein chosen for the purposes of the disclosure, which do not constitute departures from the spirit and scope of the invention.

What is claimed is:

1. A portable urine specimen collecting device for females comprising:
   - a funnel member having a top opening contoured for a snug fit over a user's pelvic area;
   - a first bottom opening in said funnel member;
   - a container;
   - holding means for holding said container under said first bottom opening; and
   - a second bottom opening in said funnel member, said second bottom opening being positioned for disposition of any overflow from said container.

2. The collecting device of claim 1 wherein said first bottom opening is higher than said second bottom opening when said container is held upright.

3. The collecting device of claim 1 wherein said holding means comprises an annular extension of said funnel member, said extension surrounding said first opening and said container being press-fitted thereto.

4. The collecting device of claim 1 wherein said holding means comprises a threaded annular extension of

said funnel member, said extension surrounding said first bottom opening and said container being threadably engaged therewith.

5. The collecting device of claim 1 wherein said funnel member includes a funnel-shaped extension, said funnel-shaped extension extending downward from said first bottom opening.

6. A portable urine specimen collecting device for females comprising:

a funnel member having a top opening contoured for a snug fit over a user's pelvic area; and

first and second bottom openings in said funnel member, said first bottom opening being adapted for cooperation with a container, said second bottom opening being positioned for disposition of any overflow from said container.

7. The collecting device of claim 6 wherein said funnel member includes a funnel-shaped extension, said funnel-shaped extension extending downward from said first bottom opening.

References Cited by the Examiner

UNITED STATES PATENTS

190,244	5/77	Olmstead	4—110
2,877,769	3/59	Hill	128—295
3,000,015	9/61	Hart	4—110

FOREIGN PATENTS

917	1/00	Great Britain.

EDWARD V. BENHAM, *Primary Examiner.*