May 14, 1968 J. V. BRUNING 3,382,763

PHOTOELECTROSTATIC COPYING MACHINE

Filed May 21, 1965 7 Sheets-Sheet 1

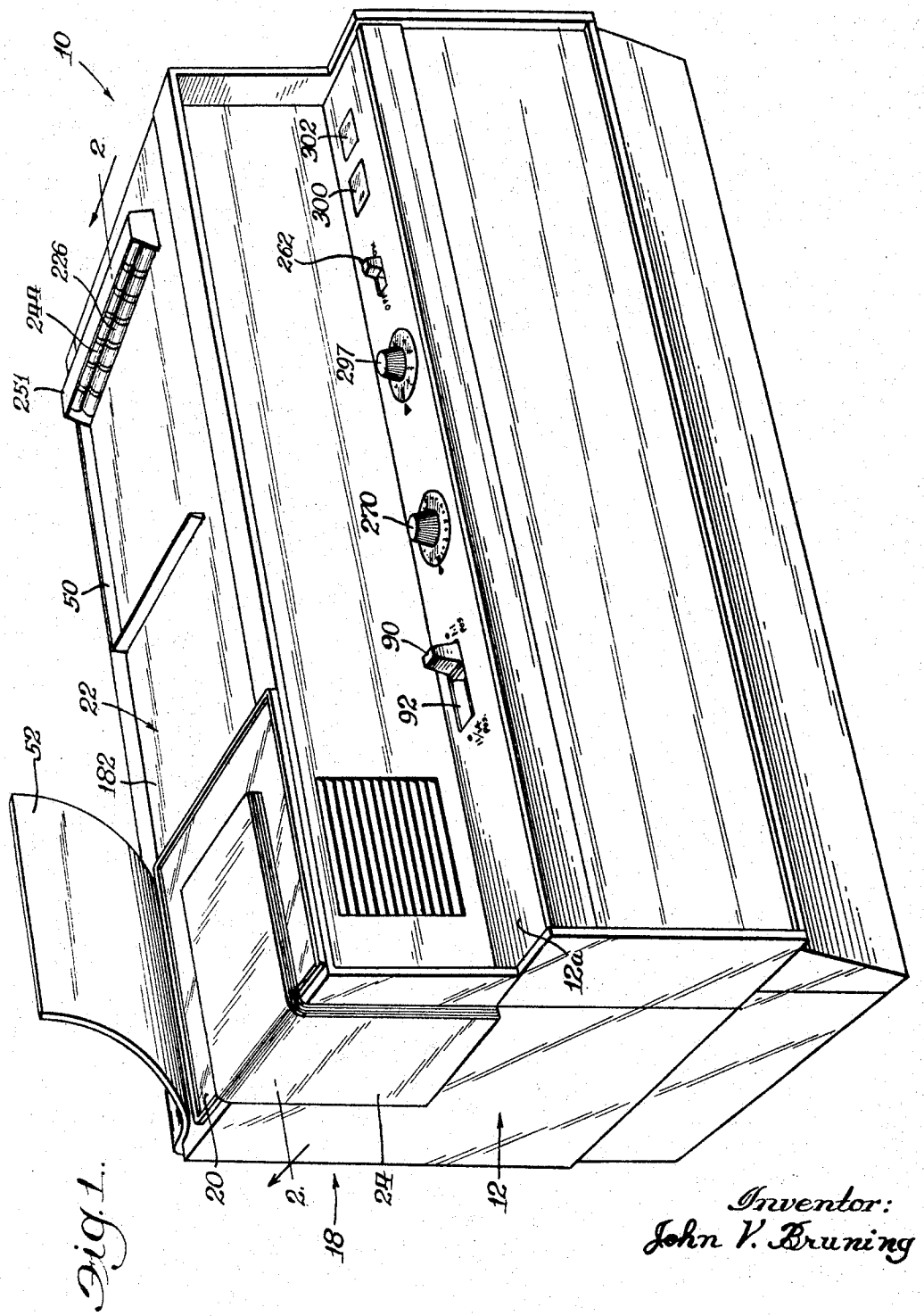

Fig. 1.

Inventor:
John V. Bruning

By: Sol L. Goldstein Atty.

May 14, 1968 J. V. BRUNING 3,382,763

PHOTOELECTROSTATIC COPYING MACHINE

Filed May 21, 1965 7 Sheets-Sheet 2

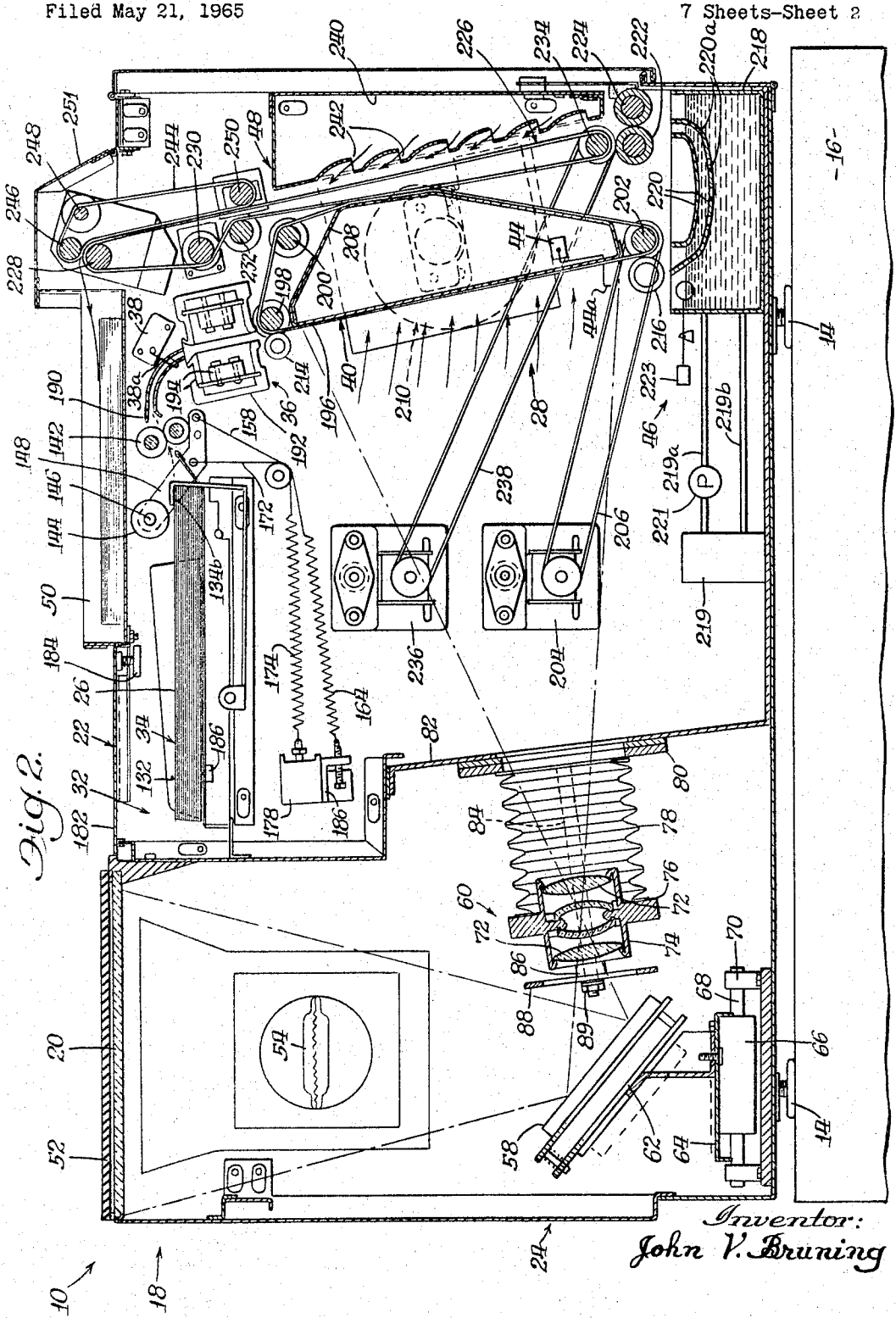

Fig. 2.

Inventor:
John V. Bruning

By: Sol L. Goldstein Atty.

May 14, 1968 J. V. BRUNING 3,382,763

PHOTOELECTROSTATIC COPYING MACHINE

Filed May 21, 1965 7 Sheets-Sheet 3

Fig. 3.

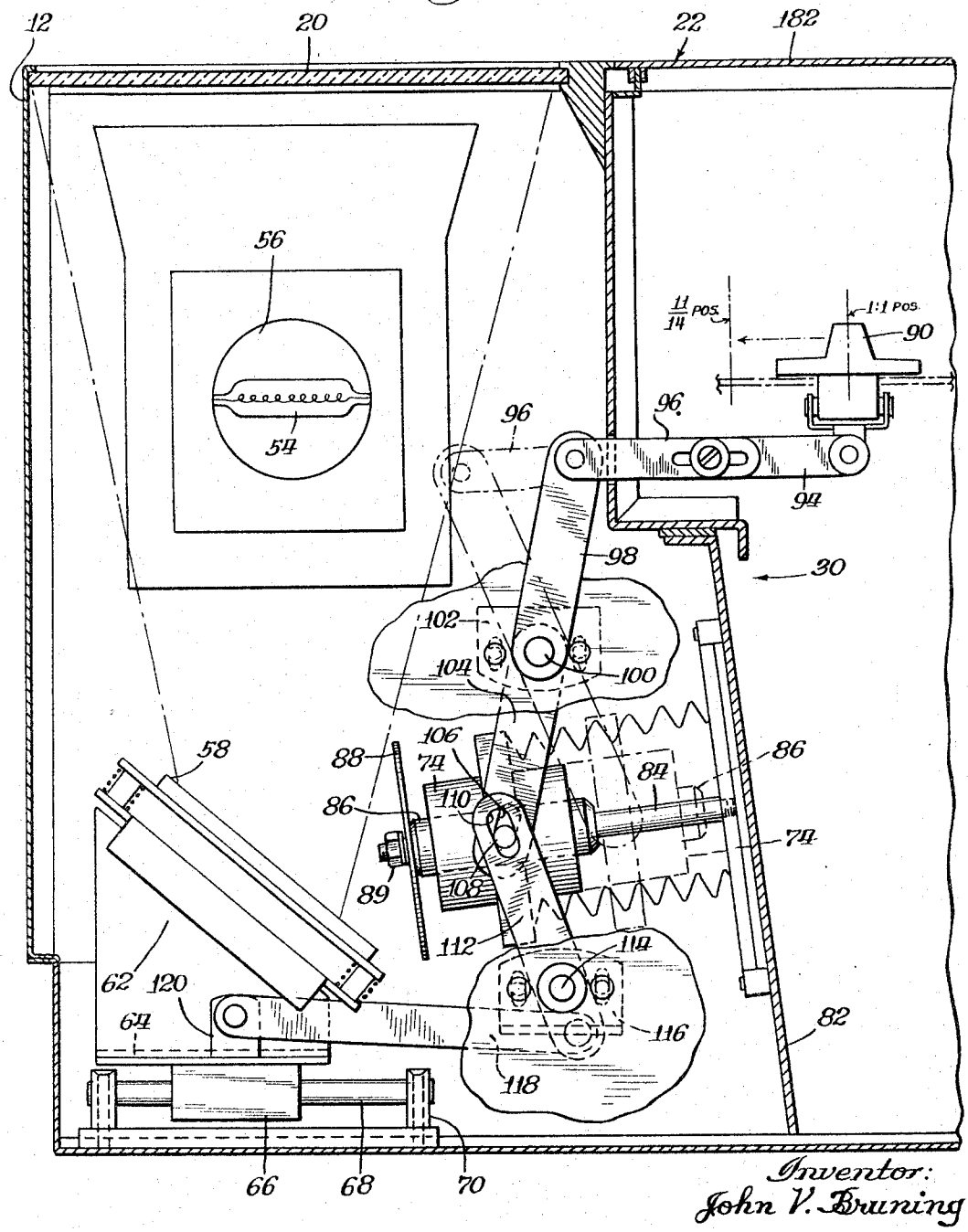

Inventor:
John V. Bruning

By: Sol L. Goldstein
Atty.

May 14, 1968 J. V. BRUNING 3,382,763

PHOTOELECTROSTATIC COPYING MACHINE

Filed May 21, 1965 7 Sheets-Sheet 4

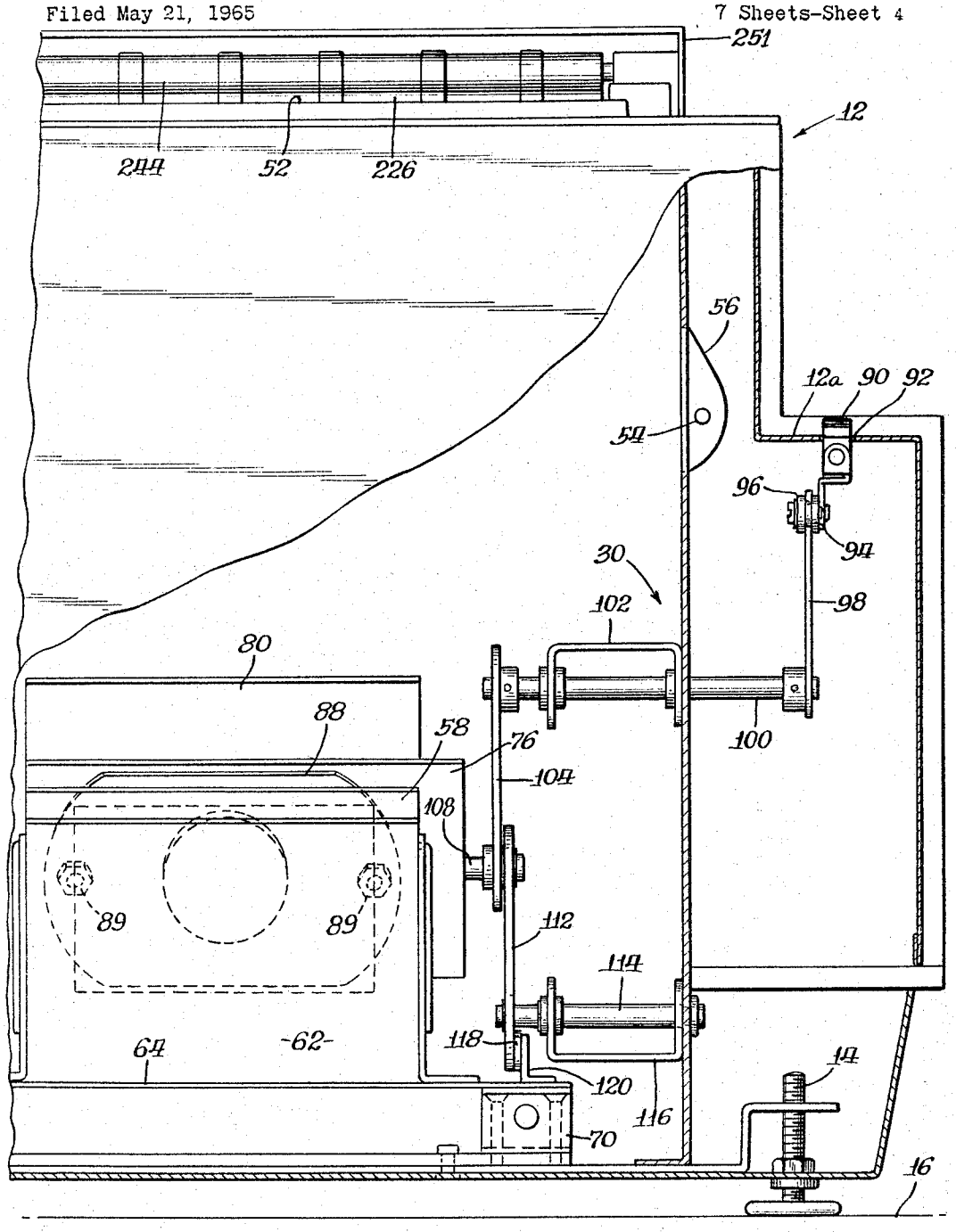

Fig. 4.

Inventor:
John V. Bruning

By: Sol L. Goldstein Atty.

May 14, 1968 J. V. BRUNNING 3,382,763

PHOTOELECTROSTATIC COPYING MACHINE

Filed May 21, 1965 7 Sheets-Sheet 5

Fig. 5.

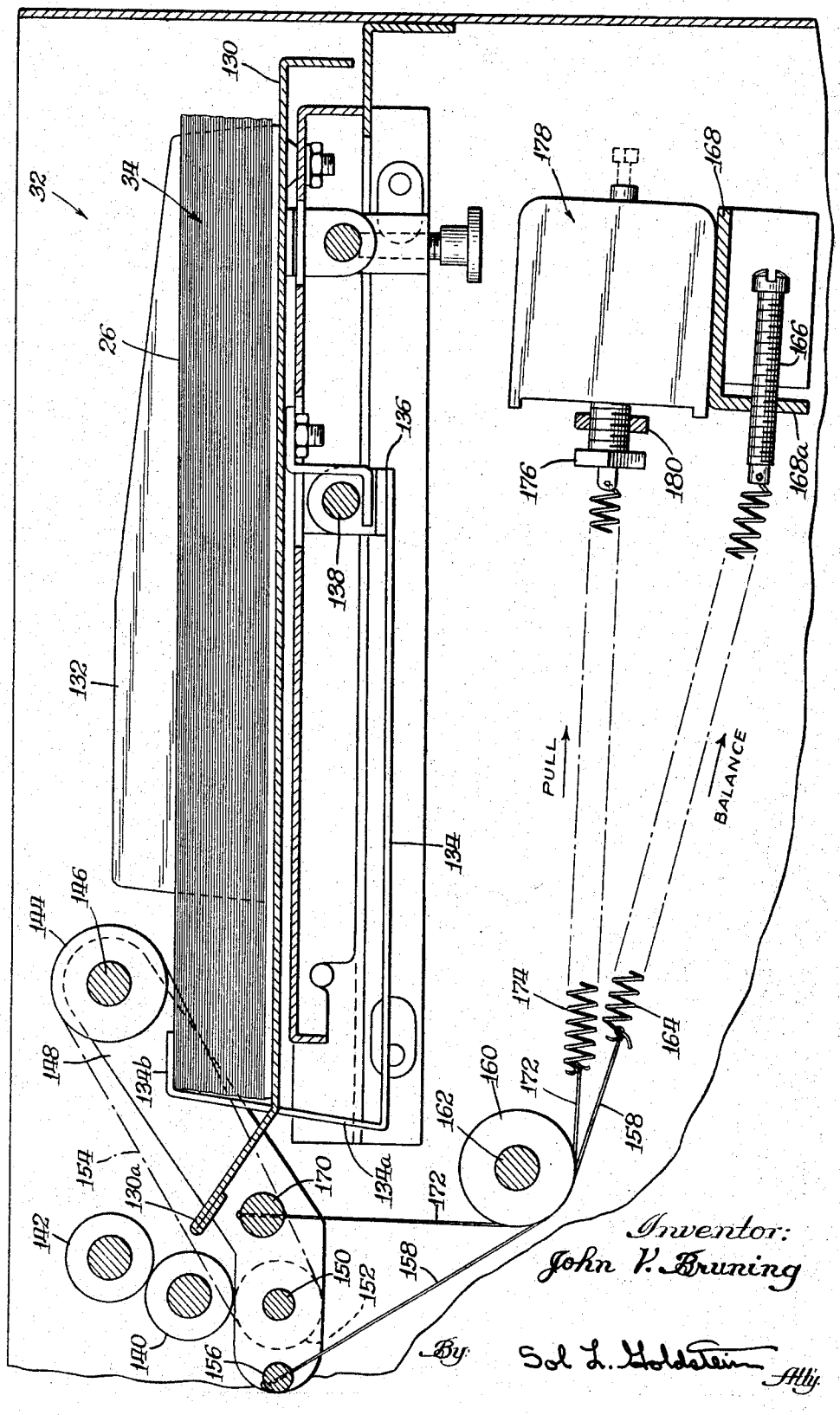

May 14, 1968 J. V. BRUNING 3,382,763

PHOTOELECTROSTATIC COPYING MACHINE

Filed May 21, 1965 7 Sheets-Sheet 6

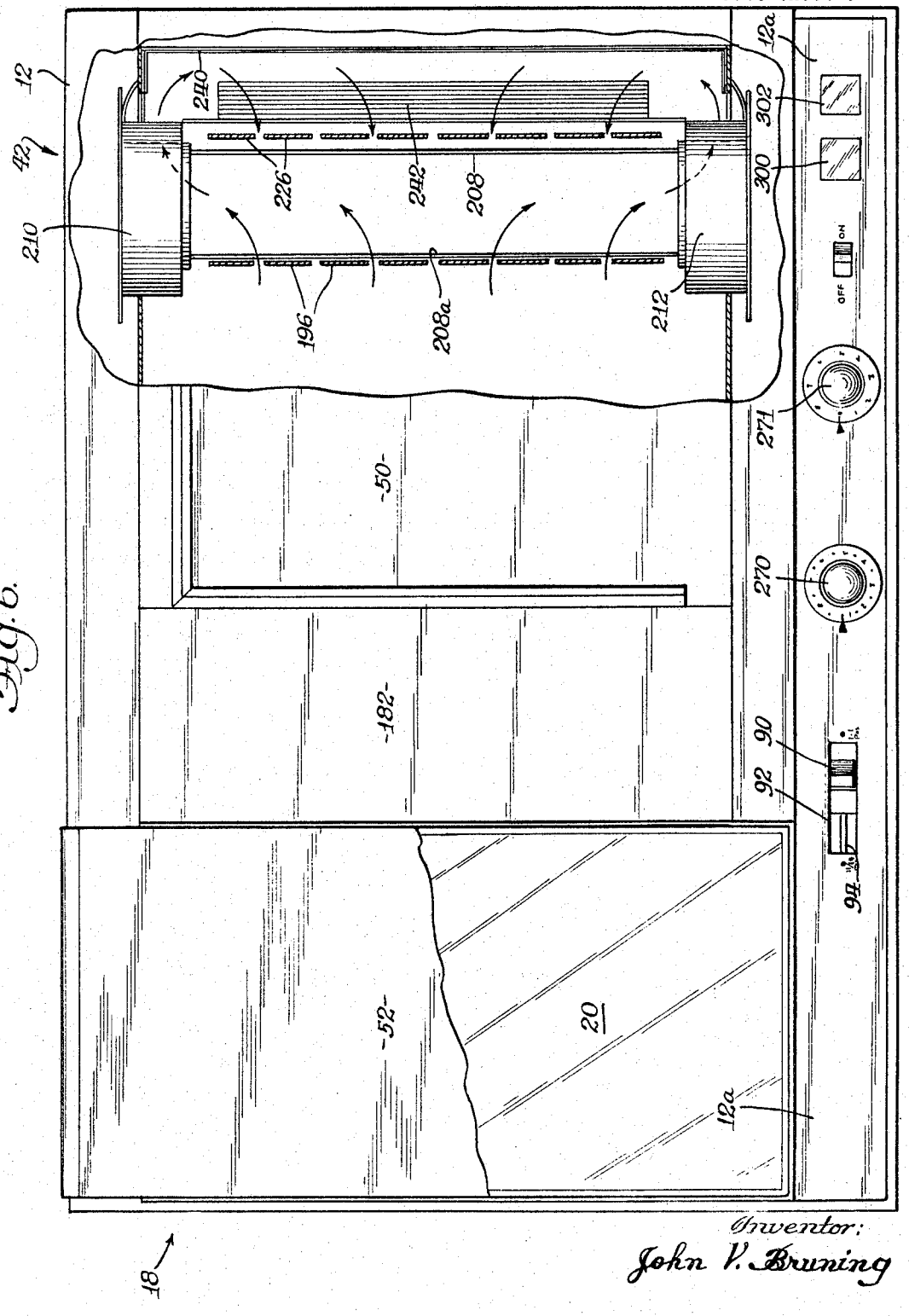

Fig. 6.

Inventor:
John V. Bruning

By: Sol L. Goldstein Atty.

May 14, 1968 J. V. BRUNING 3,382,763

PHOTOELECTROSTATIC COPYING MACHINE

Filed May 21, 1965 7 Sheets-Sheet 7

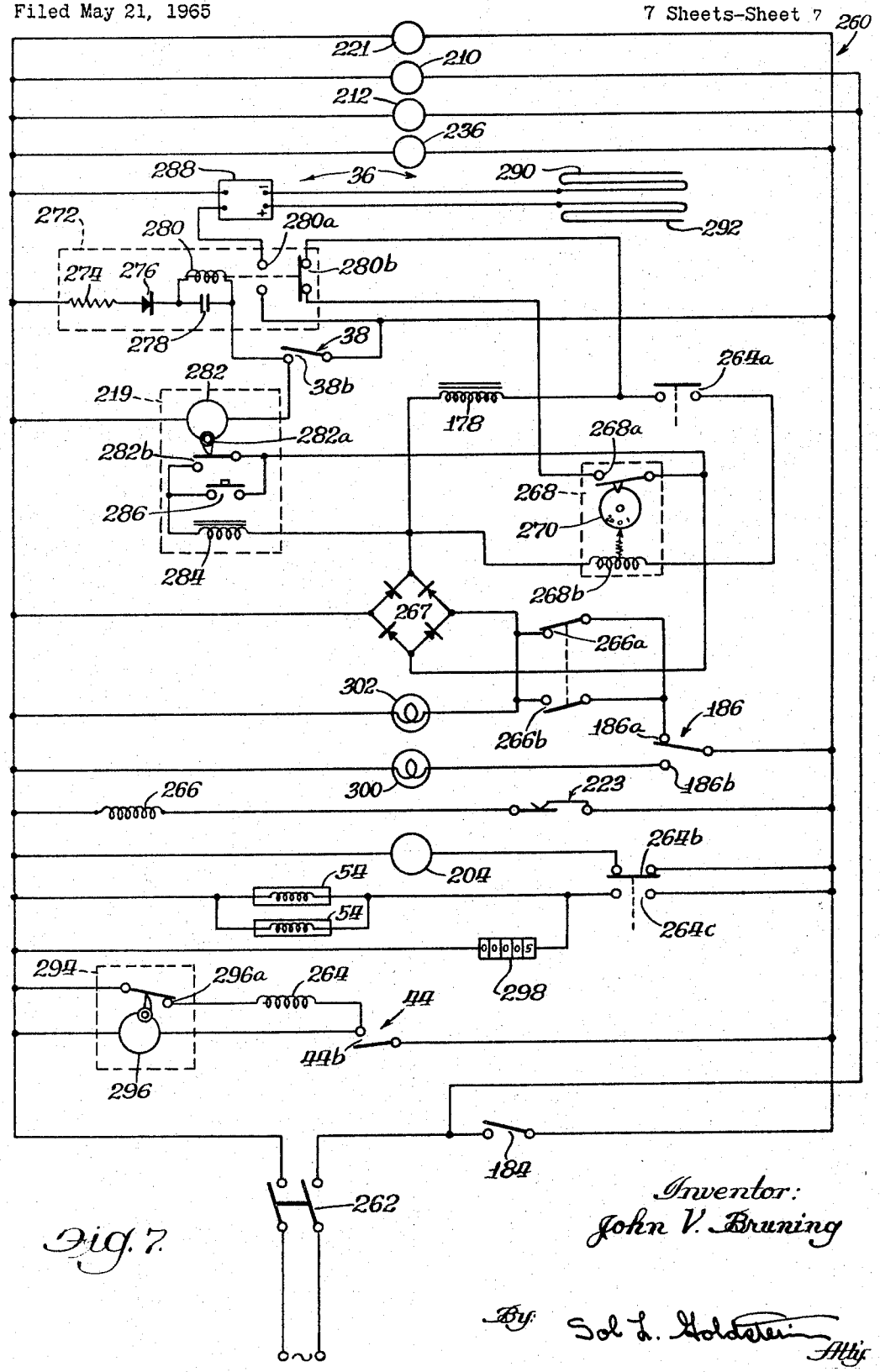

Fig. 7.

Inventor:
John V. Bruning

By Sol L. Goldstein
Atty.

United States Patent Office 3,382,763 Patented May 14, 1968

3,382,763

PHOTOELECTROSTATIC COPYING MACHINE

John V. Bruning, Prospect Heights, Ill., assignor to Addressograph-Multigraph Corporation, Charles Bruning Division, Mount Prospect, Ill., a corporation of Delaware

Filed May 21, 1965, Ser. No. 457,685
10 Claims. (Cl. 88—24)

ABSTRACT OF THE DISCLOSURE

An electrostatic copying machine includes a copy sheet transport system of rollers and belts for moving a copy sheet from a supply through a charging station, an exposure station, a liquid developing station, and a drying or fixing station in sequence. An optical system directs a light image of a stationary original to be copied on the charged copy sheet held in a fixed plane at the exposure station to provide an electrostatic image that is subsequently developed in the developing station. An air blower has an intake at the exposure station for holding the copy sheet on the transport system in the exposure plane at the exposure station and an outlet at the drying station for holding the copy sheet on the transport system and drying the sheet.

This invention relates to a copying apparatus and, more particularly, to a new and improved photoelectrostatic reproducing apparatus.

The technology of making copies of a graphic original electrostatically involves the application of a uniform electrostatic charge in the dark to a photoconductive surface selectively discharging the surface by exposure to a pattern of light and shadow in accordance with the original being copied to provide a latent electrostatic image, and rendering the latent image visible by applying finely divided electroscopic particles. The latent image can be developed directly on a photoconductive copy sheet or on another surface from which the visible image is subsequently transferred to a plain sheet. A wide range of apparatus is available to carry out the foregoing operations. They provide for the synchronous relative movement of a graphic original to the moving charged photoconductive surface during the exposure step in which the latent charge image is formed. In other prior machines, the original is held in a fixed position and a corresponding light pattern produced by light scanning the fixed original in synchronism with the moving charged surface. These copying machines, operating on the principle of transporting the original and/or the sheet on which the copy is produced, enjoy the advantage of high rate copy output since the operational steps are carried out while the elements are in motion. The mechanisms required for these synchronous movements and transporting assemblies are complex and of precision construction increasing not only the initial costs but the cost of maintenance. The optical systems employed must be carefully controlled so that the machines are capable of only a fixed size relative to the original.

Accordingly, one object of the present invention is to provide a new and improved photoelectrostatic copying machine.

Another object is to provide a photoelectrostatic copying machine of a compact and economically fabricated construction.

Another object is to provide a copying machine in which an image of a stationary object is projected onto a stationary copy sheet.

A further object is to provide a photoelectrostatic copying machine including new and improved sheet conveying means.

A further object is to provide a photoelectrostatic copying machine including an intermittently operating copy sheet conveying means for moving a copy sheet to an exposing station in which it is held in a stationary position during exposure, the conveying means then being placed in operation to feed the exposed copy sheet to a developing station.

A further object is to provide a photoelectrostatic copying machine in which the area for receiving the subject to be copied, the copy delivery station and the copy sheet feed station are all accessible at or near the top of the machine.

A further object is to provide a copying machine in which the air intake to and the air discharged from an air impelling means are used to mount flexible material on a conveying means at spaced points in the path of movement of the flexible material.

Another object is to provide a copying machine including new and improved means for easily changing the size of copies produced by the machine by simple manual adjustments that can be made externally of the machine by its operator.

A further object is to provide a copying machine including novel means for changing the copy size by varying the relative positions of components of the optical system provided in the machine.

A further object is to provide a copying machine including new and improved means for feeding copy sheets.

Another object is to provide a new and improved assembly for feeding sheets of flexible material.

In accordance with these and many other objects, an embodiment of the invention comprises a photoelectrostatic copying machine adapted to be mounted on a desk or table and having a somewhat rectangular housing with a generally uniplanar upper surface. An illuminating station is provided at one end of the housing and includes a light transmitting or transparent glass plate forming a part of the top wall structure and having an edge coextensive with an edge of the housing. This permits not only sheets of original materials but also pages from bound volumes to be copied by placing the page to be copied on the glass plate with the remainder of the book disposed along the side of the housing. Suitable illuminating means for directing light on the transparent member provide a reflected light image which is supplied through an optical system including a reflecting assembly and a lens assembly to an exposure station disposed in a fixed plane. By manually adjusting the relative positions of the lens assembly and the reflecting assembly relative to each other and to the fixed exposure plane from a control located external of the machine, the original can be copied in different selected sizes.

To supply a copy sheet of the photoelectrostatic type to the exposure station, the copying machine includes a copy sheet feeding assembly mounted immediately adjacent but just below the top wall surface of the housing, the housing being provided with a removable cover to permit the insertion of copy sheets on a stack supporting table or tray forming a part of the sheet feeding assembly. This assembly includes driven sheet engaging rollers carried on pivotally mounted lever means which are normally biased by resilient means to a position in which the drive rollers are spaced from the stack. When a copy is to be produced, a solenoid is energized to retract an armature which is connected by flexible connecting means including a resilient means to the lever. The retraction of the armature pivots the lever against its resilient bias to move the rollers against the top sheet in the stack to feed this

sheet out of the feeding assembly and into a guideway including a pair of driven rollers. The solenoid is then released, and the separated sheet is fed in the generally horizontal direction into a curved guideway into which a switch operator arm projects. When the leading edge of the sheet engages the switch operator to actuate the switch, a corona charging unit including a generally vertically extending sheet passageway is energized so that as the sheet is advanced by the driven rollers, uniform electrostatic charges of opposite polarities are applied to both sides of the copy sheet.

An intermittently operated first sheet conveying or transporting assembly, which forms a part of the exposure station, receives the charged sheet discharged from the corona unit. This conveying means includes a plurality of spaced flexible belts or closed loops which form one side of a duct structure or plenum chamber connected to the intake of an air impelling means. Thus, when the leading edge of the charged sheet is discharged from the charging station into proximity to the first sheet conveying means, the sheet is held against the flexible belts by the negative pressure induced across the belts by the air impelling means. The conveying belts extract the charged copy sheet from the charging station and advance it in a generally downwardly extending direction to an exposure position in which it is disposed in the fixed exposure plane. At this time, the leading edge of the switch engages a switch operator projecting into the path of movement of the first sheet conveying means. When this switch is actuated by engagement of the switch operator, the first conveying means is rendered inoperative, and the charged copy sheet is held in a stationary predetermined position. The actuation of this switching means also causes the momentary energization of the illuminating means so that a light image representing the original material to be copied is forwarded through the optical assembly to selectively discharge the illuminated surface of the copy sheet to provide a latent charge image representing the original to be copied.

After a predetermined time delay, the first sheet conveying means is again placed in operation to advance the exposed copy sheet to a developing station including a tank filled with a liquid developer comprising electroscopic powder and a liquid carrier. This developer station includes a guide structure with an inlet disposed immediately beneath the discharge of the first conveying means an an outlet or exit disposed immediately beneath the inlet of a generally vertically extending discharge conveying and drying means. Thus, when the first conveying means is placed in operation, the exposed copy sheet is fed through the liquid in the developer tank to permit the selective deposition of electroscopic powder on the exposed surface of the sheet in accordance with the electrostatic image. This selective adherence or deposition of electroscopic material converts the latent electrostatic image into a visible image.

The discharge conveying and drying means comprises a plurality of flexible belts disposed in spaced apart relation and extending in a generally vertical direction parallel to and spaced to one side of the first conveying means. A louvered duct or chamber connected to the discharge side of the air impelling means is spaced from the flexible belts so that the air discharged from the impelling means is directed against the outer surface of the belts. Thus, when the leading edge of the developed copy sheet leaves the exit opening in the developer tank, this leading edge passes between a pair of driven rollers to be advanced to a position engaging the flexible belts in the discharge conveying means with the image bearing surface of the sheet facing the louvered discharge of the duct structure connected to the air impelling means. The air discharged from this duct structure holds the sheet in engagement with the upwardly moving flexible belts and thus detachably mounts the copy sheet on these belts for movement therewith. The air discharged from the duct structure not only mounts the developed copy sheet on the conveying belts but also provides a flow of air for removing any liquid remaining on the copy sheet. The upper end of the discharge conveying and drying means discharges the copy sheet with the image side up on the top wall structure of the housing.

Many other objects and advantages of the present invention will become apparent from considering the following detailed description in conjunction with the drawings in which:

FIG. 1 is a perspective view of a photoelectrostatic copying apparatus embodying the present invention;

FIG. 2 is a sectional view taken generally along line 2—2 in FIG. 1;

FIG. 3 is an enlarged sectional view illustrating an optical system and adjusting means therefor which are included in the copying apparatus;

FIG. 4 is an enlarged fragmentary end elevational view in partial section illustrating the adjusting linkage for the optical system;

FIG. 5 is an enlarged fragmentary sectional view of a copy sheet feeding assembly included in the copying machine;

FIG. 6 is a fragmentary top elevational view of the copying apparatus illustrating an assembly for producing a controlled flow of air for controlling the transportation and drying of copy sheets in the apparatus; and

FIG. 7 is a schematic diagram of a circuit for controlling the operation of the copying machine.

Referring now more specifically to FIGS. 1 and 2 of the drawings, therein is illustrated a copying machine which is indicated generally as **10** and which embodies the present invention. The machine **10** includes a housing **12** having four threaded or adjustable feet **14** (FIG. 2) for mounting the machine **10** in a level position on a supporting bench, table, or desk **16**. An illuminating station indicated generally as **18** is provided adjacent one end of the generally rectangular housing **12** and includes a plate **20** of glass or other light transmitting material which forms a part of a top wall structure **22** for the housing **12**. The glass pane **20** is so positioned in the top wall **22** that its edge is coextensive with the leaf-hand (FIG. 2) vertical wall of the housing **12**. This permits the original material to be copied by the machine **10** to comprise not only sheet material but also material from bound volumes, such as a page of a book **24**, shown in FIG. 1. The book **24** can be placed with its back along the edge formed by the glass pane **20** and the vertical wall of the housing **12** with the page to be copied overlying the glass pane **20** and with the remainder of the book extending vertically along the adjacent wall of the housing **12**.

A light source included in the illuminating station **18** provides light which is reflected from the original at the station **18** and is transmitted through an optical system indicated generally as **24** (FIG. 2) to impinge on an electrophotostatic copy sheet **26** which is held in a stationary position at an exposing station indicated generally as **28** during the exposure operation. The optical system **24** can be adjusted to a plurality of different settings by a control assembly or linkage indicated generally as **30** (FIG. 3) to permit the machine **10** to provide copies on the copy sheet **26** of different sizes, e.g., full or reduced size. The assembly **30** is manually actuated by the operator at a position outside of the housing **12** and does not require factory adjustment in order to provide copies of different sizes. To provide means for supplying a copy sheet **26** at the exposing station **28**, the machine **10** includes a magazine assembly indicated generally as **32** (FIG. 2) containing a stack **34** of individual copy sheets **26**.

When the machine **10** is placed in operation, a novel control means in the sheet feeding assembly **32** is actuated to feed a single sheet from the stack **34** over a paper guideway to a charging station indicated generally as **36**.

As the forward edge of the sheet 26 provided by the assembly 32 approaches the charging station 36, a switch 38 is operated to place the charging station 36 in operation so that the opposite sides of the copy sheet 26 are provided with uniform electrostatic charges. A first sheet conveying assembly, which is indicated generally as 40 and which is intermittently operated, advances a charged sheet received from the charging station 36 to a position disposed in a fixed and predetermined exposure plane at the station 28. The copy sheet 26 is held in engagement with the conveying means 40 by an air flow assembly indicated generally as 42 (FIG. 6) including an air impelling means whose intake is placed in communication with the conveying means 40 to hold the copy sheet 26 on the conveying means by suction or negative pressure.

When the sheet 26 is advanced to a proper position in the fixed and predetermined exposure plane at the station 28 by the conveying means 40, the leading edge of the sheet engages an operator 44*a* on a switch 44 and operates this switch. When the switch 44 is operated, further movement of the sheet conveying means 40 is arrested, and the light source at the illuminating station 18 is momentarily energized to forward a light image through the optical system 24 to selectively discharge the exposed surface of the copy sheet 26 at the exposure station 28.

After a suitable time delay, the conveying means 40 is placed in operation so that the exposed copy sheet containing a latent electrostatic image is advanced to a developing station 46 of a liquid type in which electroscopic powder in a liquid carrier is placed in contact with the electrically charged surface of the copy sheet 26 to provide a visible image by the selective deposition or attraction of the electroscopic powder. The leading edge of the developed copy sheet is received on a discharge and drying conveying means indicated generally as 48 and is held in engagement therewith by the air discharged from the air impelling assembly 42. This flow of air not only holds the developed copy sheet 26 on the conveying means 48 but also dries any residual liquid retained on this copy sheet. The dried and developed copy sheet 26 is discharged into a sheet receiving receptacle 50 carried on and forming a part of the top wall structure 22 of the housing 12.

Referring now more specifically to the illuminating station, this station is disposed at the left end of the housing 12 (FIGS. 1 and 2) immediately adjacent the top wall structure 22 and includes the light transmitting member or glass pane 20. A flexible opaque cover 52 is pivotally mounted on the housing adjacent the rear wall to provide means for securing the original material to be copied in a uniplanar position adjacent the glass pane 20. To provide a light source at the illuminating station 18, a pair of lamps 54 (FIGS. 2–4) and cooperating reflectors 56 are provided adjacent the front and rear walls of the housing 12. The lamps 54 and the corresponding reflectors 56 are so disposed as to direct light against the lower surface of the glass pane 20 to provide a reflected light image which is directed by the optical system 24 onto the exposed surface of the copy sheet 26 at the exposure station 28.

The optical system or assembly 24 (FIGS. 2 and 3) includes a reflecting or mirror means 58 which is mounted in an inclined position below the glass pane 20 in a position to direct light reflected from the original to a lens assembly 60 included in the optical system 24. The mirror means 58 is mounted on a supporting structure 62 which is secured at its base to a plate 64. Opposite ends of the plate 64 are secured to a pair of bushing or sleeve members 66 which are slidably mounted on a pair of rods 68 supported on the base of the housing 12 at spaced positions by a pair of standards 70. The sleeves 66 to which the supporting structure for the reflecting means 58 is connected are slidably mounted on the rods 68 to permit the mirror or reflecting means 58 to be moved toward and away from the lens assembly 60.

The lens assembly 60 includes a plurality of lens elements 72 carried in a lens barrel 74 that is secured to a front wall 76 of an extensible bellows 78. The other end of the bellows 78 is secured to an apertured end member 80 which is secured to a dividing wall or partition 82 in the housing 12 in alignment with an opening therein which places the lens assembly 60 in communication with the exposure station 28.

The lens assembly 60 is also slidably supported on the housing 12 by means of a pair of spaced shafts or rods 84 which are rigidly secured at one end to the member 80. The front wall 76 of the bellows assembly is secured at its opposite edges to a pair of sleeves 86 which are slidably mounted on the rods 84. An apertured plate 88 secured to the front end of the rods 84 by a pair of nuts 89 provides a front stop for limiting movement to the left (FIG. 3) of the sleeves 86. By moving the sleeves 86 on the rods 84, the bellows 78 is expanded and contracted and the position of the lens barrel 74 relative to the exposure plane and the reflecting means or mirror 58 can be varied.

The linkage or control assembly 30 (FIGS. 3 and 4) provides means for changing the size of the light image impinging on the copy sheet 26 at the exposure station 28 by adjusting the relative positions of the mirror 58 and the lens assembly 60. The control assembly 30 includes a manual operating arm or knob 90 slidably mounted in and extending through a slot 92 (FIGS. 1, 3, and 4) in a shelf 12*a* disposed at the front of the housing 12. The lower end of the knob structure 90 is connected to a pair of connected links 94 and 96, and the other end of the link 96 is pivotally connected to the upper end of an arm 98 whose lower end is rigidly secured to one end of a shaft 100. The shaft 100 is pivotally mounted in a U-shaped bracket 102 carried on an intermediate wall of the housing 12. The other end of the shaft 102 is rigidly secured to the upper end of an arm 104, and the lower end of the arm 104 is provided with an elongated slot 106 in which is received a pin 108 secured to the adjacent sleeve 86. In this manner, the knob 90 is coupled to the sleeves 86 connected to the lens barrel 74.

The pin or shaft 108 is also received within an elongated slot 110 in the upper end of a lever 112. An intermediate portion of the lever 112 is pivotally mounted on a shaft 114 carried on a U-shaped bracket 116 secured to the intermediate wall of the housing 12. The lower end of the lever 112 is pivotally connected to one end of a link 118, the other end of which is pivotally connected to an upstanding arm or plate 120 which is secured to the base plate 64. Thus, the knob 90 is also coupled to the support for the reflecting means or mirror 58.

When the control assembly is in the position shown in FIG. 1, the optical system 24 provides a 1:1 ratio between the size of the original to be copied and the image projected onto the copy sheet 26 in the exposure plane at the exposing station 28. In this setting, the control linkage 30 occupies the position shown in solid line in FIG. 3. When it is desired to produce a reduced size copy in which the ratio of the area of the copy sheet to the image area of the original is, for instance, 11:14, the knob 90 is moved to the left (FIG. 3) to pivot the arm 98 in a counterclockwise direction to the position shown in dashed line. This rotates the shaft 100 in a counterclockwise direction and swings the arm 104 to the right. As the arm 104 moves to the right, the sleeves 86 are moved to the right on the rods 84 to the position shown in dashed outline, and the lens elements 72 in the lens barrel 74 are moved to the right or closer to the exposure plane.

When the sleeves 86 and the pin 108 are moved to the right by the arm 104, the lever 112 is pivoted in a clockwise direction (FIG. 3) about the shaft 114 so that the link 118 is moved to the left to move the supporting structure 62 for the mirror to the left. This increases the dis-

tance from the mirror to the lens elements **72** in the lens barrel **74**. With the lens elements **72** now positioned more closely adjacent the plane of exposure at the station **28** and with the reflecting means **58** shifted in a direction parallel to the light transmitting pane **20** away from the lens assembly **60**, the image applied to the copy sheet **26** at the exposure station **28** is reduced in size relative to the original graphic material at the illuminating station **18**. Accordingly, by manually adjusting the knob **90** at a position outside of the housing **12**, the copying machine **10** can be easily adjusted to provide copies of various sizes relative to the original.

As set forth above, the sheet feeding assembly **32** (FIGS. 2 and 5) is operable to feed a single photoelectrostatic copying sheet **26** from the stack **34** thereof each time that a copy is to be produced by the machine **10**. The sheet feeding assembly **32** can be of any suitable construction but preferably comprises one of the type shown and described in detail in the copending application of John L. Tregay, Ser. No. 441,063, filed Mar. 19, 1965, which application is assigned to the same assignee as the present application. As shown therein, the assembly **32** includes a sheet or stack supporting table **130** on which a pair of adjustably mounted side rails or edge guides **132** are mounted for movement to spaced positions determined by the width of the copy sheets **26** to be supplied to the machine **10**. A pair of separator arms **134** connected at their rear end to the bight portion of two U-shaped brackets **136** are pivotally mounted thereby on a transversely extending rod or shaft **138**. The forward ends of the two separator arms **134** includes a vertically extending portion **134***a* which provides a front stop for the stack **34** and a rearwardly projecting lip or separator portion **134***b* which is adapted to rest on the top sheet **26** in the stack **34** adjacent a corner thereof.

When the top sheet **26** is engaged and fed forwardly by suitable drive means, the forward corners of the top sheet **26** buckle slightly to permit the sheet to pass beyond the two separator elements **134** which are disposed immediately adjacent the side rails or edge guides **132**. The leading edge of the sheet **26** fed from the stack **34** is guided between a pair of feed rollers **140** and **142** which are driven by suitable means (not shown) so as to be rotated during the interval in which the first sheet conveying assembly **40** is in operation. The leading edge of the sheet **26** is guided to the nip between the rollers **140** and **142** by and upwardly inclined and somewhat centrally disposed guide portion **130***a* formed integral with the stack supporting table **130**.

The sheet feeding assembly **32** includes new and improved means for controlling the movement of sheet engaging and driving means into intermittent engagement of the top sheet **26** in the stack **34** so that sheets can be fed from the assembly **32** at times determined by the operating cycle of the machine **10**. To provide means for feeding a sheet from the assembly **32**, a pair of friction wheels **144** are mounted in spaced apart positions on a shaft **146** which is rotatably mounted between two levers **148** spaced outwardly from the two sides of the sheet feeding assembly **32**. The two levers **148** are pivotally mounted on a shaft **150** intermediate its ends, the shaft **150** being provided with a driven pulley **152** which is coupled by a flexible belt **154** to a pulley (not shown) rigidly secured to the shaft **146**. The pulley **142** rotates the shaft **146** and the friction wheels **144** secured thereto in a clockwise direction (FIG. 5) about the axis of the shaft **146** to feed the sheets **26** to the left (FIG. 5) or to the right (FIG. 2).

The two levers **148** are normally pivoted in a counterclockwise direction (FIG. 5) about the shaft **150** to a normal position determined by a stop (not shown) to hold the friction wheels **144** out of engagement with the sheet **26** in the stack **34**. To bias the levers or supporting arms **148** to this position, a rod **156** connected between ends of these two levers is connected to one end of a flexible connector **158**. The flexible connector **158** passes around one of the two pulleys **160** rotatably mounted on a shaft **162** and is connected at its other end to a tension spring **164**. The other end of the tension spring **164** is connected to a lead screw **166** threadedly mounted in a downwardly extending flange or wall **168***a* on a supporting bracket **168** carried in a fixed position on the housing **12** of the machine **10**. By rotating the lead screw **166** to move to the right, greater tension is applied to the levers **148** through the flexible connector **158** and the tension spring **164**. By rotating the lead screw **166** to move to the left (FIG. 5), the bias applied by the spring **164** is reduced.

To provide means for selectively moving the friction wheels **144** into engagement with the top sheet **26** in the stack **34**, the two levers or supporting arms **148** are connected by a rod **170** at a point disposed on the other side or to the right (FIG. 5) of the pivotal axis defined by the shaft **150**. A flexible connector **172** is connected at one end to the rod **170** and passes around the second one of the pulleys **160** rotatably mounted on the shaft **162** to be secured at its other end to one end of a tension spring **174**. The other end of the tension spring **174** is connected to the outer end of a magnetic armature **176** which is mounted for reciprocating motion within an axial opening in a winding in an electrical solenoid indicated generally as **178**. A stop nut **180** is threadedly mounted on the magnetic armature **176**.

When the solenoid **178** is energized, the armature **176** moves to the right and applies a resilient bias to the spring **174** and the flexible connector **172** tending to pivot the levers or arms **148** in a clockwise direction about the shaft **150**. The force provided by the operation of the solenoid **178** is sufficient to overcome the resilient bias provided by the spring **164** so that the arms **148** pivot in a clockwise direction to move wheels **144** into engagement with the top sheet **26** in the stack **34**. Since this deflecting force is applied to the arms **148** through the tension spring **174**, the wheels **144** are resiliently biased into engagement with the top sheet **26**, and the same stroke of the armature **176** can cause movement of the arms **148** through different distances in a clockwise direction about the shaft **150** to compensate for stacks **34** of varying heights. The stroke of the armature **176** can be adjusted by threading the stop nut **180** to various positions. When the solenoid **178** is released, the tension spring **164** pivots the arms **148** in a counterclockwise direction about the axis of the shaft **150** to move the friction wheels **144** out of engagement with the stack **34**. It is only necessary for the friction wheels **144** to engage and drive the top sheet **26** of the stack **34** until the leading edge of the separated sheet **26** is received in the nip between the driven rollers **140** and **142**.

As illustrated in FIG. 2 of the drawings, the sheet feeding and separating assembly **32** extends in a generally horizontal direction interposed between the illuminating station **18**, on the left, and the charging station **36** and the exposure station **28**, on the right, in a position closely underlying the top wall structure **22**. To permit the insertion of a stack **34** of copy sheets **26** between the side rails **132** in the assembly **32**, the top wall structure includes a removable or hinged cover **182**. Suitable means are provided which are accessible when the cover **182** is removed or displaced for lifting the separator arms **134** to permit the insertion of a new stack **34** under the rearwardly projecting portions **134***b* on these separator arms. A switch **184** which is operated when the cover **182** is removed disables certain components of the machine **10** to prevent its operation when the cover is not in place. A switch **186** in the assembly **32** is operated when the supply of copy sheets **26** has been depleted and is used to arrest operation of the machine **10** when this occurs.

The separated sheet **26** from the feeding assembly **22** enters the nip between the rollers **140** and **142** and moves

in a generally horizontal direction (FIG. 2) to enter a guideway formed by a pair of arcuate or generally semicircular members **190** defining a passageway for directing the leading edge of the copy sheet downwardly toward the charging station **36**. During movement through the passageway formed by the guideways **190**, the leading edge of the sheet **26** engages and displaces an actuator arm **38***a* for the switch means **38** so that this switch is operated to energize the charging station **36**.

This charging station applies a uniform electrostatic charge of opposite polarity to opposite surfaces of the sheet **26**. The charging station **36** includes a housing **192** having a centrally disposed passageway extending in a generally vertical direction. Supporting structures **194** on opposite sides of the passageway support corona discharge wires or other suitable means for imparting uniform electrostatic charge blankets to the opposite sides of the copy sheet **26** as it passes through the charging station **36**. As the leading edge of the copy sheet **26** leaves the housing **192**, it is placed in engagement with the first sheet conveying means **40** in the exposure station **28** to be moved to a position for exposure in which the uniform electrostatic charge on one surface of the sheet is selectively dissipated in accordance with the light image provided by the optical system **24**.

The first sheet conveying means includes a plurality of flexible belts **196** disposed in side-by-side spaced positions and carried on three lines of guide rollers or pulleys **198**, **200**, and **202**. A drive motor **204** is coupled by flexible drive means **206** to one line of the rollers, such as the rollers **202**. The direction of rotation of the driven line of rollers **202** is such that the flexible belts **196** move downwardly in the exposure plane and move upwardly in a position disposed to the rear or the right of the exposure plane.

To provide means for retaining the copy sheet **26** in engagement with the flexible belts **196** without requiring the provision of opposing structures which would interfere with the transmission of the light image to the copy sheet **26**, a duct structure or plenum chamber **208** (FIGS. 2 and 6) is provided which is disposed between the different flights of the flexible belts **196**. A forward or left-hand wall **208***a* of the duct structure or plenum chamber is provided with apertures placing the interior of this chamber in communication with the interior of the housing **12** immediately adjacent the belts **196**. If desired, the belts **196** can be provided with perforations which are aligned with the openings in the walls **208**. The opposite ends of the duct or plenum chamber **208** are placed in communication with the air intakes to a pair of blowers or air impelling means **210** and **212** disposed generally adjacent the front and back walls of the housing **12**. The air impelling means **210** and **212** can comprise squirrel cage type exhaust blowers.

The air drawn from the interior of the housing **12** into the duct structure **208** provides a pressure differential across the belts **196** and the superimposed copy sheet **26** to detachably retain this sheet in engagement with the belts **196** for movement therewith. Accordingly, as the leading edge of the sheet **26** passes out of the exit of the charging station **36**, it is fed between the belts **196** and a roller **214** (FIG. 2) and is then held in engagement with the belts **196** during their downward movement. When the trailing edge of the copy sheet **26** passes beyond the operator **38***a*, the switch **38** is released. The drive motor **204** continues in operation until the leading edge of the sheet **26** on the conveying belts **196** engages and actuates the operator arm **44***a* for the switch means **44**. The operation of the switch means **44** interrupts the operation of the motor **204** so that the charged copy sheet **26** is retained in the exposure plane at the station **28** in a position to receive the light image supplied from the illuminating station **18** through the optical system **24**. After a suitable delay, operation of the motor **204** is initiated, and the leading edge of the exposed sheet **26** passes between a roller **216** and the belts **196** to be discharged to the developing station **64**.

The developing station **46** can be of any suitable type well known in the industry, such as a magnetic brush or cascade developer using electroscopic or toner powder. In the illustrated copying machine **10**, the developing station **46** utilizes a liquid developing technique and comprises a tank or reservoir **218** having mounted therein a pair of spaced and somewhat arcuately formed plates **220** defining a passageway having an inlet disposed immediately below the discharge end of the conveying means **40** and an exit or outlet disposed immediately below the inlet to the drying and discharge conveying means **48**. The interior of the reservoir or vessel **218** is filled with a suitable liquid developer such as a mixture of electroscopic powder and a liquid vehicle. This liquid developer can, for instance, be of the type described in detail in United States Patent No. 2,907,674. The lower guide structure **220** is provided with a plurality of spaced apertures **220***a* to permit the liquid developer solution to enter the passageway defined by the guide elements **220**.

When the uniformly charged outer surface of the copy sheet **26** at the exposure station **28** is exposed in accordance with the light image provided by the optical system **24**, this surface is selectively discharged to provide a latent electrostatic image which is developed at the developing station **46** by the selective deposition, attraction or adherence of particles of electroscopic or toner powder from the liquid developer to the selectively charged surface of the sheet. This means that after a period of use, the concentration of the electroscopic powder or particles in the liquid developer becomes depleted and necessitates the replacement of this material. To accomplish this, the copying machine **10** includes a unit **219** for metering the liquid concentrate or slurry of electroscopic powder from a bulk supply thereof to the liquid developer unit. The unit **219** includes a vessel or reservoir tank filled with a liquid developer of the same concentration as in the developer tank **220**. The unit **219** also includes a replaceable bottle or other container of the liquid concentrate which has a much higher percentage of the developer powder together with electrically operated or controlled dispensing means for feeding metered amounts of the concentrate to the reservoir tank portion of the unit **219**. The electrically controlled dispensing means in the unit **219** can be of any suitable known construction. The unit **219** meters a quantity of the toner concentrate or slurry in response to the length of copy sheet material passed through the machine **10**. Manually controlled means for operating the dispensing means can also be provided.

As illustrated in FIG. 2 of the drawings, the unit **219** is connected to the interior of the vessel **218** through a pair of lines **219***a* and **219***b*. A pumping means **221** is disposed in the line **219***a* to circulate the liquid developer replenished with concentrate between the unit **219** and the vessel **218**. This circulation aids in equally distributing the electroscopic powder in the liquid developer serving to agitate the mixture and prevent the electroscopic powder from settling. The lines **219***a* and **219***b* preferably are provided in positions communicating with the interior of the vessel **218** at spaced apart locations to insure the adequate distribution of a liquid developer of uniform concentration throughout the interior of the vessel.

The machine **10** also includes means for detecting when the level of the liquid developer within the tank **218** falls below a level at which proper developing takes place. More specifically, a float controlled valve **223** of any of the well known constructions is provided which is actuated whenever the level of liquid developer within the vessel **218** falls below the minimum level required for proper development of the exposed copy sheets **26**.

When the leading edge of the exposed copy sheet **26** is fed past the idler or guide roller **216** into the entrance of the passageway defined by the guide members **220**, this sheet is fed beneath the surface of the liquid developer

and passed through the passageway propelled by the first transport means **40**. A leading edge of the sheet leaves the developing passageway in the reservoir **218** through the exit or outlet opening and is fed into the nip between a pair of continuously driven rollers **222** and **224**. Further movement of the developed sheet **26** is controlled by the discharge and drying conveying means **48**.

The discharge and drying conveying means **48** includes a plurality of flexible belts **226** passing around a plurality of spaced lines of pulleys or rollers **228**, **230**, **232**, and **234**. A selected one of the lines of the pulleys, such as the line of pulleys **234**, is coupled to a continuously operating drive motor **236** by flexible coupling or connecting means **238**. The drive motor **236** can also be coupled to drive one of the rollers **222** and **224**. The direction of rotation of the drive motor **236** is such that the right-hand portions of the flexible belts **226** are driven vertically upward.

To provide means for concurrently mounting the developed sheet **26** on the flexible belts **226** and to provide means for drying any liquid retained on the copy sheet, a duct structure or chamber **240** (FIGS. 2 and 6) is provided having a plurality of louver-type openings **242** therein. The louvered openings **242** are spaced from and directed toward the adjacent portion of the flexible belts **226**. The duct or chamber **240** is coupled to the air discharge or outlet from the impelling means **210** and **212** so that the air discharged by these impelling means is directed against the flexible belts **226**. Thus, as the leading edge of the developed copy sheet is discharged from between the rollers **222** and **224**, the air blast forces this sheet against the flexible belts **226** to move therewith with the image bearing surface facing toward the duct structure **240**. The flow of air directed out of the louvered openings **242** also dries the sheet **26**. Thus, the air impelling means **210** and **212** serve to hold the copy sheet **26** in the exposure station **28** in position on the first conveying means **40** by suction and serve to dry and hold the developed copy sheet **26** on the flexible belts **226** in the conveying means **48** by a positive pressure.

As the leading edge of the developed copy sheet **26** passes beyond the upper end of the duct or chamber **240**, the image is in a fixed or permanent state in which it is not distorted. The leading edge then passes between the flexible belts **226** and an additional set of flexible belts **244** which pass around a plurality of lines of rollers or pulleys **246**, **248**, and **250** and which are driven in synchronism with the belts **226**. When the leading edge of the copy sheet **26** reaches the upper end of the housing **12**, it is discharged from between the belts **226** and **244** into the print or copy receiving tray **50** with the developed and fixed image facing upwardly to permit immediate visual inspection without requiring the sheet to be inverted. The upper portion of the conveying means **48** including the lines of rollers **228**, **246**, and **248** and the upper portions of the flexible belts **226** and **244** is enclosed in an upwardly projecting housing **251** having an opening in its left-hand wall through which the developed copy sheets **26** are discharged to the copy receiving tray or receptacle **50**.

A control circuit **260** (FIG. 7) coordinates and controls the operation of the various components of the copying machine **10**. The machine **10** is placed in condition for operation by removing the cover **182** and placing a stack **34** of copy sheets **26** in the sheet feeding assembly **32**. With the cover **182** replaced and a stack **34** of sheets **26** on the table **130**, both the sheet detecting switch **186** and the cover control switch **184** are operated to their normal conditions. In the normal condition of the switch **186**, a pair of contacts **186***a* (FIG. 7) are closed, and a pair of contacts **186***b* are opened. The switch **184** (FIG. 7) is operated from the position shown to a closed position when the cover **182** is closed. The machine **10** is then prepared for operation by closing a main switch **262** to supply conventional alternating current potential to the control circuit **260**. This potential is applied through the closed switch **184** to the winding of the developer pump **221** so that the liquid developer is circulated within the vessel **218**. The input potential is also applied through the closed switch **184** to the winding of the motor **236** so that the discharge and drying conveying means **48** is placed in operation. This input potential is directly forwarded to the two air impelling means or blowers **210** and **212** so that a flow of air is produced through the ducts **208** and **240** to condition the conveying means **40** and **48** for operation. The input potential is also forwarded through a pair of normally closed contacts **264***b* on a relay **264** to energize the drive motor **204** so that the flexible belts **196** in the sheet conveying means **40** are advanced and the rollers **140** and **142** are placed in rotation.

If the supply of liquid developer in the tank **218** is at a high enough level to permit proper development of an exposed copy sheet **26**, the level or float controlled switch **223** is in the operated condition shown as a closed pair of contacts in FIG. 7 of the drawings. The input potential is supplied through the contacts **223** across an operating winding **266** to operate this relay to close a pair of contacts **266***a* and to open a pair of contacts **266***b*. The closed contacts **266***a* connect the input potential through the closed contacts **186***a* to the input of a full wave rectifier bridge **267**, thereby providing a direct current operating potential for a number of components of the control circuit **260**. The control circuit **260** remains in this condition until the copying machine **10** is started.

When a copy is to be made of an original, such as a page from the book **24**, the page to be copied is placed on the light transmitting pane **20**, and the knob **90** is adjusted to its left-hand or right-hand position (FIG. 1) in accordance with the size of the copy to be reproduced. The adjustment of the knob **90** controls the assembly **30** to place the reflecting means or mirror **58** and the lens assembly **60** in a correct position for producing the desired copy. The operator then adjusts an automatic counting control assembly or unit **268** to a setting representing the desired number of copies. The control unit **268** includes a manual operating knob **270** (FIGS. 1 and 6) mounted on the shelf **12***a* on the housing **12**. The unit **268** is of a conventional construction and includes a pair of normally open contacts **268***a* (FIG. 7) which are closed when the knob **270** is turned to a setting representing a desired number of copies. The setting of the knob **270** also advances a counting mechanism whose setting represents the desired number of copies. This counting mechanism is operated a single step in a direction toward a normal setting by a pawl and ratchet mechanism or other suitable means each time that a solenoid **268***b* is energized. Accordingly, when the knob **270** is turned to a setting representing the desired number of copies to be made from the original, the contacts **268***a* are closed to initiate the cyclic operation of the machine **10** under the control of the control circuit **260**.

When the contacts **268***a* are closed, the operating winding of the solenoid **178** is connected across the output of the bridge **267** and normally closed contacts **280***b* of relay **280**, in a time delay circuit **272**. When the solenoid **178** is operated, the armature **176** is retracted to pivot the levers **148** in a clockwise (FIG. 5) or counterclockwise (FIG. 2) direction about shaft **150**. The continuously driven rollers **144** move into engagement with the top copy sheet **26** disposed in the sheet feeding assembly **32**. This moves the top sheet **26** to the right (FIG. 2) into the nip between the rollers **140** and **142**, which are rotated by the energized motor **204**. The rollers **140** and **142** advance the leading edge of the copy sheet **26** through the guideway provided by the structures **190** until the leading edge of the sheet **26** engages and deflects the operator **38***a* for the switch **38**. When the switch **38** is operated, a pair of contacts **38***b* (FIG. 7) are closed.

The closure of the contacts **38***b* completes an energizing circuit for a timing motor **282** in the toner dispensing as-

sembly **219** so that a cam mechanism shown schematically at **282***a* is driven. After a period of time determined by the period that the contacts **38***b* are maintained in a closed condition, the cam means **282***a* closes a pair of normally open contacts **282***b* to connect a solenoid **284** across the output of the bridge **267**. When the solenoid **284** is energized, a predetermined quantity of the toner concentrate is dispensed into the liquid developer in the unit **219**. This energization of the solenoid **284** can also be controlled by a manually actuated switch **286**. The contacts **282***b* are closed in a random time sequence relative to the feeding of the copy sheets **26** in dependence on the linear length of copy sheet exposed by the machine **10**. In other words, the contacts **282***b* may or may not be closed during any given copy feeding operation and at random times during the copying cycle. The contacts **282***b* are opened by the cam means **282***a* in response to continuing operation of the timer motor **282**.

The closure of the contacts **38***b* also connects the time delay circuit **272** across the input potential so that the winding of the relay **280** is energized and a capacitor **278** is charged by pulsating half cycle signals supplied through a resistor **274** and a diode **276**. The energization of the winding of the relay **280** operates this relay to open the contacts **280***b* and to close a pair of normally open contacts **280***a*. The closure of the contacts **280***a* connects the alternating current input potential to a power supply **288** forming a part of the charging station **36** so that a pair of corona discharge wires **290** and **292** for applying oppositely poled charges to the opposite sides of the copy sheet **26** are supplied with direct current potentials. Thus, the charging station **36** is now placed in operation to apply uniform electrostatic charges of opposite polarity to the opposite sides of the copy sheet **26** as it passes through the charging station **36**. The opening of the contacts **280***b* interrupts the above-described circuit for energizing the winding in the solenoid **178**, and the tension spring **164** pivots the levers **148** in a clockwise direction (FIG. 2) to move the friction wheels **144** out of engagement with the stack **34**. The copy sheet **26** previously separated from the stack **34** is propelled through the charging station **36** toward the exposure station **28** by the rollers **140** and **142**.

As the leading edge of the charged copy sheet **26** emerges from the housing **192** of the charging station **36**, it passes between the pressure roller **214** and the flexible belts **196** of the sheet conveying means **40** to be advanced to a position at which it is under the influence of the air intake to the blowers or air impelling means **210** and **212**. Thus, the sheet **26** is held in engagement and for movement with the belts **196** by the negative pressure or suction resulting from the air intake to the blowers **210** and **212**. The sheet **26** moves downwardly in a generally vertical direction with the belts **196** in the sheet conveying means.

As the trailing edge of the copy sheet **26** passes the operator arm **38***a* for the switch **38**, this switch is released to open the contact **38***b*. This terminates the energization of the timer motor **282**. The opening of the contacts **38***b* also interrupts the energizing circuit for the winding of the relay **280**. However, this relay does not release at this time because of the time delay afforded by the charged capacitor **278** which now discharges through the winding of the relay **280** to maintain this relay in an operated condition. The time delay provided by the circuit **272** is such that the contacts **280***a* remain energized to maintain the energization of the power supply **288** until the trailing edge of the copy sheet **26** has been discharged from the charging station **36**. This insures that the corona discharge wires **290** and **292** remain energized long enough to completely charge both surfaces of the copy sheet **26**. This delay in the release of the relay **280** also maintains the contacts **280***b* in an open condition so that the copy feed solenoid **178** cannot be operated.

When the charged sheet **26** is disposed in the exposure plane, its leading edge engages the operator **44***a* (FIG. 2) for the switch **44** and operates this switch to close a pair of normally open contacts **44***b*. When the contacts **44***b* (FIG. 7) are closed, a timing unit **294** is rendered operative to control the illumination of the original at the illuminating station **18** and to momentarily arrest operation of the sheet conveying means **40**. More specifically, when the contacts **44***b* are closed, a timing motor **296** is placed in operation, and the relay **264** is connected across the input alternating current potential over a circuit including a pair of normally closed contacts **296***a* controlled by the timer motor **296**. The time of exposure of the copy sheet to the projected light image is selected by turning a control knob **297** (FIG. 1) which positions the timing motor operated cam **296** with respect to the switch **296***a*. The completion of the circuit including the closed contacts **296***a* operates the relay **264** to close a plurality of contacts **264***a* and **264***c* and to open the contacts **264***b*.

The opening of the contacts **264***b* interrupts the energizing circuit for the drive motor **204** so that the rollers **140** and **142** are no longer driven and so that the flexible belts **146** remain in a fixed position. In this position, the air passing through the duct structure **208** holds the charged copy sheet **26** in a fixed exposure plane at the exposing station **28**. The closure of the contacts **264***c* connects the lamps **54** across the input potential so that the original disposed on the light transmitting pane **20** at the illuminating station **18** is illuminated, and the light selectively reflected therefrom is transmitted over the optical system **24** to selectively discharge the uniformly charged surface of the copy sheet **26** at the exposing station to provide a latent electrostatic image corresponding to the original to be copied. The closure of the contacts **264***c* also energizes an operating winding in a counter **298** so that this counter is operated to add an increment of value indicating the production of a copy by the machine **10**.

When the contacts **264***a* are closed by the operation of the relay **264**, the solenoid **268***b* in the counting control unit **268** is connected to the open contacts **280***b* on the relay **280** in the time delay unit **272**. Thus, when the contacts **280***b* are closed at the end of the delay period of the unit **272**, the solenoid **268***b* is energized to return the counting mechanism a single step in the direction of the normal setting of this unit. If only a single copy was requested, the unit **268** is returned to its normal position by the single operating pulse, and the contacts **268***a* are opened. This interrupts the operating circuit for the solenoid **268***b* and also interrupts the operating circuit for the copy feed solenoid **178** which was also completed by the closure of the contacts **280***b* This momentary energization of the solenoid **178** may result in partial feeding of a sheet **26** from the stack **34**, but this does not affect the operation of the copying machine **10** inasmuch as it has not been fed a sufficient distance to be received between the rollers **140** and **142**.

At the end of the exposure step controlled by the exposure timer **294** as selected by turning knob **297**, the contacts **296***a* are opened to interrupt the operating circuit for the relay **264** so that the contacts **264***a* and **264***c* are opened and so that the contacts **264***b* are closed. The opening of the contacts **264***a* interrupts one point in the operating circuit for the solenoid **268***b*, and the opening of the contacts **264***c* terminates the energization of the lamps **54** and releases the counter **298**. The closure of the contacts **264***b* completes the energizing circuit for the drive motor **204** so that this motor places the sheet conveying means **40** in operation and also initiates the rotation of the rollers **140** and **142**. The rollers **140** and **142** will feed a copy sheet **26** from the assembly **32** if more than a single copy has been requested. When the conveying means **40** is placed in operation, the exposed copy sheet **26** at the station **28** is fed past the roller **216** into the guideway formed by the structures **220** within the tank **218** at the developing station **46**. The selectively discharged surface containing the latent electrostatic image is disposed face down within the liquid developer

so that the electroscopic powder from the developer is selectively deposited on the surface to convert the latent electrostatic image into a visible image. When the leading edge of the developed copy sheet leaves the guideway provided by the structure **220**, it is received within the nip between the rollers **222** and **224** to be fed to a position in which the back surface of the copy sheet **26** engages the flexible belts **226** with the developed surface facing the louvered openings **242** in the duct structure **240**.

When the trailing edge of the copy sheet **26** moves beyond the operator **44***a* for the switch **44**, this switch is released to open the contacts **44***b*. This terminates the energization of the timing motor **296** in the unit **294** and permits the contacts **296***a* to return to a closed condition to partially prepare the control circuit **260** for an additional cycle of operation.

When the leading edge of the developed copy sheet is fed by the rollers **222** and **224** onto the flexible belts **226** in the discharge and drying conveying means **40**, the air discharged from the duct **240** through the openings **242** not only forces the sheet against the belts **226** to move therewith but also dries the copy sheet. The developed copy sheet **26** is advanced by the belts **226** past the duct structure **240** so that the leading edge passes between the belts **226** and the belts **244**. These two arrays of belts continue the generally vertical elevation of the developed copy sheet so that it is discharged from the housing **260** into the print receiving tray or recepacle **50**. Since the conveying means **48** operates continuously and since the energizing circuit for the solenoid **178** is completed as soon as the time delay unit **272** releases the relay **280**, a subsequent copy sheet in multiple copy runs can be charged and exposed during the time interval in which the developed copy sheet is being discharged by the conveying means **48**.

In the event that the supply of copy sheets **26** in the assembly **34** becomes depleted during the operation of the machine **10**, the switch **186** is operated to open the contacts **186***a* and to close the contacts **186***b*. The closure of the contacts **186***b* illuminates a lamp **300** (FIGS. 1, 6, and 7) to provide a visible indication that the supply of copy sheets **26** has been depleted. The opening of the contacts **186***a* interrupts the circuit for energizing the input of the rectifier bridge **267** so that the components energized by this bridge cannot be operated. Thus, further operation of the machine **10** is disabled whenever the supply of copy sheets **26** in the assembly **32** becomes depleted. Whenever the supply of copy sheets is replaced, the switch **186** is operated to open the contacts **186***b* and to close the contacts **186***a* to return the machine **10** to its normal condition.

Similarly, when the supply of liquid developer in the vessel or receptacle **218** falls below the predetermined level necessary for properly developing exposed copy sheets, the float controlled switch **223** is operated to interrupt the operating circuit for the relay **266**. The release of the relay **266** opens the contacts **266***a* and closes a pair of contacts **266***b*. The closure of the contacts **266***b* causes the illumination of a lamp **302** (FIGS. 1, 6, and 7) to provide a visible indication that it is necessary to provide additional liquid developer to the machine **10**. The opening of the contacts **266***a* interrupts the input circuit to the rectifier bridge **267** and disables the components energized thereby to prevent operation of the control circuit **260** and the machine **10**. When the supply of liquid developer is replenished so that the switch **223** is closed, the relay **266** is again operated to restore the control circuit **260** to its normal condition.

Whenever the cover **182** is opened to replenish the supply of copy sheets **32**, the switch **184** is opened. The opening of the switch **184** disables all of the components in the control circuit **260** with the exception of the blowers **210** and **212** which are maintained in an energized condition over a circuit independent of the switch **184**. Replacing the cover **182** closes the switch **184** so that the control circuit **260** is restored to its normal condition.

Although the present invention has been described with reference to a single illustrative embodiment thereof, it should be understood that numerous other modifications and embodiments can be devised by those skilled in the art that will fall within the spirit and scope of the principles of this invention.

What is claimed and desired to be secured by Letters Patent of the United States is:

1. In an apparatus for making a copy of an original on a flexible copy sheet, copy sheet exposing and developing means, conveying means including flexible belts for moving the copy sheet relative to the copy sheet exposing and developing means, air impelling means including intake and discharge means, and duct means coupled to the intake and discharge means and extending to areas adjacent different portions of the conveying means so that the air intake to the air impelling means holds the copy sheet against the flexible belts in one area by suction and the air discharged from the air impelling means forces the copy sheet against the flexible belts in another area.

2. In an apparatus for making a copy of an original, conveying means for conveying flexible material and including conveying surface means on which the flexible material is disposed for movement along a given path through the apparatus, air impelling means having an intake means and an outlet means, a first duct structure communicating with the intake means and disposed adjacent one side of the conveying surface means at one point in the path of movement to hold the flexible material on the conveying means by a flow of air into the first duct structure, and a second duct structure communicating with the outlet means and disposed adjacent an opposite side of the conveying structure at a point in the path of movement spaced from the one point to hold the flexible material on the conveying means by the flow of air out of the duct means.

3. In an apparatus for making a copy of an original on a flexible copy sheet, copy sheet exposing and developing means, conveying means including flexible belts for moving the copy sheet relative to the copy sheet exposing and developing means, air impelling means including intake and discharge means, and duct means coupled to the intake and discharge means and extending to areas adjacent different portions of the conveying means, the duct means terminating at one end in an opening disposed adjacent the flexible belts on the side thereof opposite to the side of the belts on which the copy sheet rests and terminating at the other end in an opening disposed on the same side of the belts as the copy sheet but spaced from the belts so that the copy sheet is held on the belts by suction in one area and by the force of discharged air in another area.

4. An apparatus for making a copy of an original on a copy sheet comprising a copy sheet exposing station for exposing a copy sheet with a light image derived from the original, a liquid developing station for developing an exposed copy sheet supplied from the exposing station, conveying means for feeding a copy sheet to the exposing station and for removing a developed copy from the developing station, air impelling means having intake and discharge means, and duct means for coupling the intake means to the conveying means at the exposing station to hold the copy sheet on the conveying means by suction and for coupling the discharge means to the conveying means adjacent the developing means so that the discharged air both dries the developed copy sheet and forces the developed copy sheet against the conveying means to be moved thereby, the discharged air providing the sole means for holding the developed copy sheet in driving engagement with the conveying means.

5. In an apparatus for making a copy on a copy sheet, sheet conveying means including a plurality of movable and spaced conveying elements, a liquid developing unit

for developing a latent image on a copy sheet, said sheet conveying means including a first portion for feeding a copy sheet into the liquid developing unit and a second portion for feeding a developed copy sheet away from the liquid developing unit, an air impelling means having an inlet means and an outlet means, first air conveying means extending between the inlet means and the first portion of the sheet conveying means so that the flow of air into the air impelling means holds a copy sheet on the first portion of the sheet conveying means, and second air conveying means connected between the outlet means and a position spaced from the second portion of the sheet conveying means to direct the air discharged from the air impelling means onto a developed copy sheet on the second portion of the sheet conveying means to both dry the developed copy sheet and provide the sole means for mounting the copy sheet on the second portion of the sheet conveying means.

6. In an apparatus for making a copy on a copy sheet, a liquid developing unit including a copy sheet receiving passageway having an entrance and an exit, first sheet conveying means disposed above the liquid developing unit for moving a copy sheet in a generally downward direction into the entrance to the passageway in the liquid developing unit, second sheet conveying means disposed above the liquid developing unit for moving a developed copy sheet in a generally upward direction from the exit from the passageway in the liquid developing unit, air impelling means having inlet means and outlet means, first duct means connecting the inlet means to the first sheet conveying means so that the air flowing into the inlet means of the air impelling means holds a copy sheet on the first sheet conveying means, and second duct means connected between the outlet means and a position adjacent the second sheet conveying means to direct the air discharged through the outlet means against a copy sheet on the second sheet conveying means to dry the copy sheet and to bias the sheet against the second sheet conveying means to move therewith.

7. The apparatus set forth in claim **6** in which the first and second sheet conveying means are disposed in spaced and generally parallel positions, and in which the first duct means is disposed between the first and second sheet conveying means.

8. The apparatus set forth in claim **6** in which the first and second duct means are joined at one end by the air impelling means to provide a generally U-shaped structure.

9. In an apparatus for making a copy on a copy sheet, a pair of spaced sheet conveying means spaced from each other, a generally U-shaped duct structure having a pair of spaced legs each having a wall disposed adjacent one of the sheet conveying means, each of said walls having air passageways therein, and an air impelling means disposed in and defining a part of the bight portion of the U-shaped duct structure, the air impelling means having an inlet connected to one of the legs and an outlet connected to the other of the legs.

10. The apparatus set forth in claim **9** including an additional air impelling means connecting the other ends of the legs of the duct structure, the additional air impelling means including an inlet connected to the said one leg adjacent its end and an outlet connected to the said other leg adjacent its end.

References Cited

UNITED STATES PATENTS

3,153,978	10/1964	Zeutschel	88—24 X
3,282,153	11/1966	Chen et al.	95—89 X

NORTON ANSHER, *Primary Examiner.*

R. A. WINTERCORN, *Assistant Examiner.*