W. L. EVANS, Jr.
WINDOW GLASS SETTING.
APPLICATION FILED MAR. 3, 1913.

1,199,357. Patented Sept. 26, 1916.

Fig. 1.

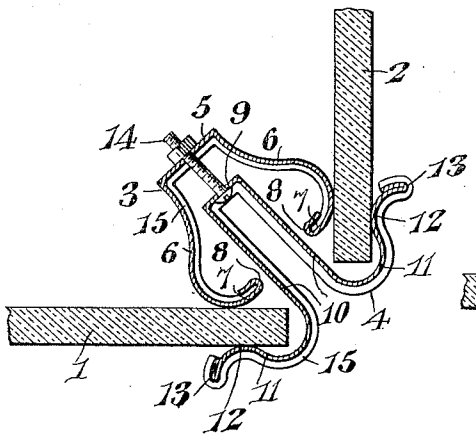

Fig. 2.

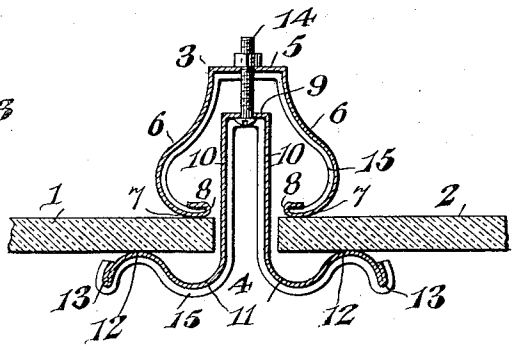

Fig. 3.

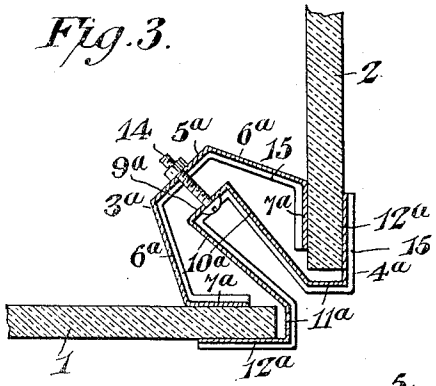

Fig. 4.

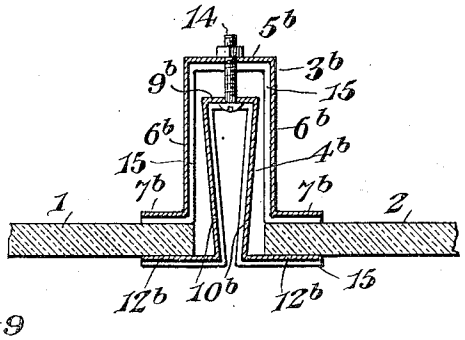

Fig. 5.

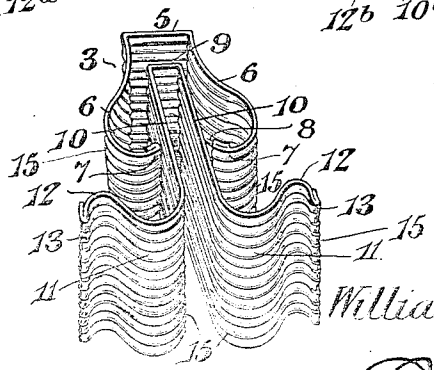

WITNESSES
Jas. F. McCathran
F. T. Chapman.

William L. Evans, Jr.
INVENTOR

BY E. G. Siggers
ATTORNEY

UNITED STATES PATENT OFFICE.

WILLIAM LEWIS EVANS, JR., OF WASHINGTON, INDIANA.

WINDOW-GLASS SETTING.

1,199,357. Specification of Letters Patent. Patented Sept. 26, 1916.

Application filed March 3, 1913. Serial No. 751,796.

To all whom it may concern:

Be it known that I, WILLIAM L. EVANS, Jr., a citizen of the United States, residing at Washington, in the county of Daviess and State of Indiana, have invented a new and useful Window-Glass Setting, of which the following is a specification.

This invention has reference to improvements in window glass settings, and more particularly to a setting or junction member for joining the adjacent edges of two sheets or panes or plates of glass whether presented in alinement or at an angle one to the other.

The object of the present invention is to provide a junction member whereby ample ventilation may be had at the joined portions of the adjacent panes of glass to aid in preventing sweating or fogging or frosting of the glass due to deposition of moisture thereon, especially on the inner or unexposed faces due to marked difference in temperature between the exposed and unexposed faces of the glass. Such deposition of moisture productive of sweating or frosting in accordance with the temperature conditions is due to a sufficiently marked difference of temperature between two faces of the pane of glass to cause a chilling of the glass where it may be in contact with moist warm air, as is liable to occur in show windows of stores. This is avoided in the present invention by the provision of means for a thorough and even ventilation of the show window, whereby but little difference in temperature can exist between the outer and inner faces of the glass, wherefore there is no tendency for the deposition of moisture and consequently there is no sweating or fogging or, in freezing weather, frosting of the glass.

In some forms of show windows corner uprights are avoided and even intermediate uprights are avoided and narrow junction strips are employed, so that there is as little obstruction as possible to a clear view of the interior of the window. The present invention has particularly to do with this style of junction and while the present invention does in reality provide a markedly rigid connection for the adjacent edges of two adjoining panes of glass, the junction strip is not at all obtrusive to the observer, and is, moreover, susceptible of ornamental configuration and provides a very even and free means of communication between the interior and exterior of the window through a multitude of small channels.

The invention will be best understood from a consideration of the following detailed description, taken in connection with the accompanying drawings forming a part of this specification, with the further understanding that while the drawings show a practical form of the invention, the latter is not confined to any exact conformity with the showing of the drawings, but may be changed and modified so long as such changes and modifications mark no material departure from the salient features of the invention.

In the drawings:—Figure 1 is a cross section of a junction strip showing the adjacent edges of two panes of glass arranged at substantially right angles one to the other. Fig. 2 is a similar view showing the adaptability of the structure for panes of glass in alinement or in the same general plane. Fig. 3 is a view similar to Fig. 1 but showing a somewhat different form of the invention. Fig. 4 is a view similar to Fig. 2 but showing a somewhat different form of the invention from the other figures. Fig. 5 is a perspective view of a small portion of a junction strip such as illustrated in Figs. 1 and 2.

Referring to the drawings there is shown a small portion of each of two panes of glass, 1, 2, which may be taken as plate glass sheets such as are customarily employed in show windows, although the invention is by no means limited to such specific use. These plate glass sheets or panes are sometimes located at an angle one to the other, being shown in Fig. 1 as at right angles, or in line one with the other as in Fig. 2, and while it is sometimes the custom to bring the adjacent edges into substantial contact, such edges must be then specially prepared for joining.

In accordance with the present invention the junction member comprises two parts 3, 4, respectively, the part 3 being designed to be interior of the show window and the part 4 exterior thereof except for an intermediate portion which is designed to enter between the adjacent edges of the two panes of glass and to enter the member 3 to a certain extent. The part or member 3 is of general channel form with a central longitudinal connecting yoke 5 and two legs 6

projecting therefrom, these legs being each in the form of a reverse curve, the curvature being outwardly or away one from the other as the legs recede from the yoke 5, while the terminal portions 7 of the legs curve one toward the other until the extremities or free edges of the side members 6 are presented one toward the other, these free edges being indicated at 8 and are there returned on themselves both for strength and stiffness and to avoid the exposure of raw edges. The member 4 is also of channel form with a longitudinal connecting yoke 9 from which project two side members 10 in substantial parallelism one with the other for a portion of their length, and then these members are curved outwardly or away one from the other as indicated at 11 and terminate in a reversely curved portion 12 still directed oppositely, so that such oppositely-directed portions are each in cross-section in the form of a compound curve, while the marginal part 13 of each reversely or compoundly curved part 12 is returned upon itself to form a strengthening bead and thereby avoid the presentation of a raw edge. Both members 3 and 4 are corrugated substantially throughout their lengths, the length of the corrugations being transverse to the length of the respective members.

While the channel form of the members stiffens them lengthwise, the corrugations greatly stiffen them crosswise or in the direction of their width, and particularly are the clamping edges of the channel members rendered especially stiff or rigid and resistant to distortion. The corrugations are continued practically throughout the length of both channel members, and while such an arrangement is the preferred one, another function which these corrugations possess and which will be hereinafter referred to does not make it absolutely necessary that the corrugations extend completely across the channel members, but may be confined to the terminal portions or the legs or sides of the two channel members where they are brought into engagement with the opposite surfaces of the glass panes. Even such an arrangement very materially stiffens the window setting.

Traversing the yokes 5 and 9 are bolts 14, so that the side portions 10 or channel of the member 4 may be drawn or telescoped into the member 3 through the space between the facing terminal portions 8 of the channel member 3 and the width of the channel or narrow portion 10 of the member 4 determines to an extent the spacing of the adjacent edges of the glass sheets 1 and 2. The bolts 14 have their heads at the bottom of the channel of the member 4 while the nuts on the bolts are at the inside of the bar though exterior to the yoke of the channel member 3. This permits the use of a very short bolt which may be shorter than the depth of either channel. It is to be observed that the curved portions 7 of the channel member 3 and the corresponding curved portions 12 of the channel member 4 have convex faces presented one toward the other, while the spacing between the terminal portions 8 and the concaved side of the curved portion 11 is greater than that between the convex faces of the portions 7 and 12. This permits the clamping of the junction device to adjacent edges of the two glass plates 1 and 2 whether they be in the same plane or in alinement, or whether they be at an angle one to the other even up to an angle of ninety degrees, or more, and since the channel members 3 and 4 are rendered quite stiff by the corrugations the junction device forms a markedly rigid support of little visible area and, therefore, but slightly obtrusive, while if the designer so desires it may be made quite ornamental.

The corrugations are indicated at 15, and these corrugations provide many closely adjacent channels throughout the length of the junction device, where in engagement with the glass plates, on both faces of these plates, and while it is not necessary to bring the edges of the glass plates into actual contact with the metal between them, there would still be as many channels of communication between the interior and exterior as before. A very even and wide spread ventilation is therefore provided, and provision being made wherever else the glass plates are supported for a like freedom of ventilation by a similar means, such as shown in my companion application filed of even date herewith for a metallic glass setting, the liability of deposition of moisture on the interior of the glass in the form usually known as sweating to thereby produce fogging of the glass under some circumstances, and frosting of the glass when the temperature is low enough, is practically eliminated. Furthermore, the reversely curved formation on the side walls of the channels 3 and 4 in Figs. 1, 2 and 5 is productive of a certain elasticity causing a firm gripping of the window glass, and at the same time yielding to temperature expansions and following up temperature contractions. The arrangement of the junction device is particularly valuable in providing a tight junction even though the glass expand and contract as well as providing ample ventilation.

The flexibility of the corner bar of Fig. 1 or center bar of Fig. 2 is not confined to the particular form shown in these two figures, for it may be constructed as shown in Figs. 3 and 4 but in such instance requires a special construction for each angular relation of the glass plates 1 and 2, whether an angular relation of ninety degrees as in Fig. 3,

or zero as in Fig. 4 where the plates are in alinement or in one plane. In Fig. 3 there is shown a channel member 3^a having substantially straight sides 6^a diverging one from the other as they leave the yoke 5^a and having extremities 7^a bent at an angle to the main portion of the sides 6^a, so that they conform to the inner faces of the glass plates 1 and 2 when arranged at right angles one to the other, or these terminal or edge portions 7^a may be related at other angles in accordance with the angular relation of the glass plates 1 and 2. The outer member 4^a has a yoke portion 9^a connected to the yoke 5^a by bolts 14, while those portions of the sides of the channel member 4^a indicated at 10^a may approach each other as they recede from the yoke 9^a and have right angle terminal portions 11^a, 12^a, or these parts may be arranged at other angles so that the terminal parts 12^a are substantially parallel with the terminal parts 7^a of the sides 6^a of the member 3^a. In Fig. 4 the arrangement is such as might be adopted for two plates 1 and 2 when in alinement. In this case the inner member 3^b has a yoke 5^b with sides 6^b extending therefrom in substantially parallelism and terminating in angular terminal portions 7^b projecting oppositely one from the other, so as to engage the inner faces of the glass plates 1 and 2. The other channel member 4^b has a yoke member 9^b joined to the yoke member 5^b by bolts 14 and the main portions of the sides of the channel member 4^b are straight and approach each other as indicated at 10^b similar to the sides 10^a of the member 4^a while these sides members 10^b have terminal angular portions 12^b adapted to engage the outer faces of the glass plates 1 and 2 and are in substantial parallelism with the terminal portion 7^b of the sides 6^b. The channel members 3^a and 4^a and the channel members 3^b and 4^b are corrugated as in the forms shown in Figs. 1 and 2, the corrugations being indicated at 15.

In all the forms illustrated the clamping of the glass plates between the two channel members is accomplished by the bolts 14 and the construction is such that there is a degree of elasticity permitting all those changes which may take place in the relations of the glass plates due to temperature conditions. At the same time the center or corner bars are both elastic and rigid, the rigidity being due to the corrugations which also serve the important function of providing a multitude of channels throughout the lengths of the bars for free and equitable communication between the interior and exterior of the window by way of the corner or center bars for a purpose already set forth.

The structures of Figs. 1 and 2 have the advantage of conformability to different angles from zero angle to ninety degrees or more with respect to the relative positions of the glass plates or panes, while the structures of Figs. 3 and 4 though possessing all other advantages of the structures of Figs. 1 and 2 must be made to conform to each change of angle of any material extent between zero angle and ninety degrees or more.

The composite bar forming the glass setting or junction member is stiff longitudinally but is elastic or yieldable transversely or laterally, so that glass plates or panes may expand or contract without the glass slipping in the setting. It is not an uncommon experience to have expensive plate glass sheets or panes break by slipping backward and forward in rigid corner bars. In the present invention should one or the other or both of the glass panes expand or contract, the yoke 10 or 10^a or 10^b and also the yoke 6 or 6^a or 6^b, as the case may be, will give with the expanding or contracting glass without slipping of the latter, this giving being due to the open formation of the junction or corner strip which adjacent to the edges of the joined panes of glass is open or spread apart so as to permit a certain degree of play without the surfaces engaging. This lateral yieldability or elasticity provides for changing relations of the glass panes under temperature conditions even though the feature of ventilation were not present.

What is claimed is:—

1. A junction bar for the adjacent edges of two associated panes of glass, comprising two channel members, one shaped to extend between the adjacent edges of the associated panes of glass and into the other channel member, and said channel members having their free edges shaped to engage respectively opposite faces of the associated panes of glass, and connecting means between the two channel members for holding them in clamping relation to the panes of glass, the members being each formed of sheet metal channeled in the direction of its length and corrugated throughout its length with the corrugations extending in the direction of its width, whereby the members of the junction bar are stiffened both longitudinally and laterally and the corrugations form ventilating channels extending transversely of the height of the glass panes when in place.

2. A junction bar for the adjacent edges of two panes of glass, comprising two single-thick channel members each formed of sheet metal corrugated throughout the length of the channel member, with the corrugations extending transversely thereof, one channel member having a yoke portion and side members projecting therefrom with the marginal or edge portions shaped to engage the corresponding faces of the associated panes of glass, and the other channel

member having the yoke portion and side members adapted to extend between the adjacent edges of the associated panes of glass and into the first-named channel member between the sides thereof, and with the terminal portions of the sides shaped to engage those faces of the associated panes of glass remote from the faces engaged by the first-named channel member, and connecting means for the two channel members at the yoke portions thereof adapted to move the channel members one toward the other into clamping engagement with the panes of glass.

3. A junction bar for the adjacent edges of two panes of glass, comprising two single-thick channel members of corrugated sheet metal with the corrugations continued throughout the length of the channel members and extending transversely thereof and both channel members having sides with terminal portions adapted to engage the respective inner and outer faces of the associated panes of glass, and connecting means adapted to cause the channel members to clamp the glass panes together, whereby the junction bar is stiffened both longitudinally and laterally and the transverse corrugations provide ventilating channels on both faces of each pane of glass extending transversely of the height of the glass when set and communicating through the interior of the junction bar.

In testimony that I claim the foregoing as my own, I have hereto affixed my signature in the presence of two witnesses.

WILLIAM LEWIS EVANS, JR.

Witnesses:

O. D. CALVIN,

C. C. LENGENFELLER.