United States Patent [19]

Beaudouin

[11] **3,835,579**

[45] **Sept. 17, 1974**

[54] **GAS LIGHTERS**

[75] Inventor: **Jean Claude Beaudouin,** Elbeuf, France

[73] Assignee: **Flaminaire,** Paris, France

[22] Filed: **Mar. 20, 1973**

[21] Appl. No.: **343,143**

[30] **Foreign Application Priority Data**

Mar. 28, 1972 France 72.10918

[52] **U.S. Cl.** **431/344,** 431/261

[51] **Int. Cl.** **431 353,** F23d 13/04

[58] **Field of Search** 431/261, 344, 350, 353

[56] **References Cited**

UNITED STATES PATENTS

1,758,853	5/1930	Ruttiman	431/261
1,813,962	7/1931	Scheu	431/344
1,895,032	1/1933	Fisher	431/344

Primary Examiner—John J. Camby

Attorney, Agent, or Firm—Michael S. Striker

[57] **ABSTRACT**

The gas lighter comprises a reservoir containing a liquefied gas, an expansion device arranged to cause this liquefied gas to pass from its liquid phase to its gaseous phase, an escape passage comprising an outlet valve, and a tubular burner. The tubular burner comprises, in the vicinity of its outlet, a bundle of parallel wires arranged axially and projecting beyond the end of the tubular burner.

11 Claims, 4 Drawing Figures

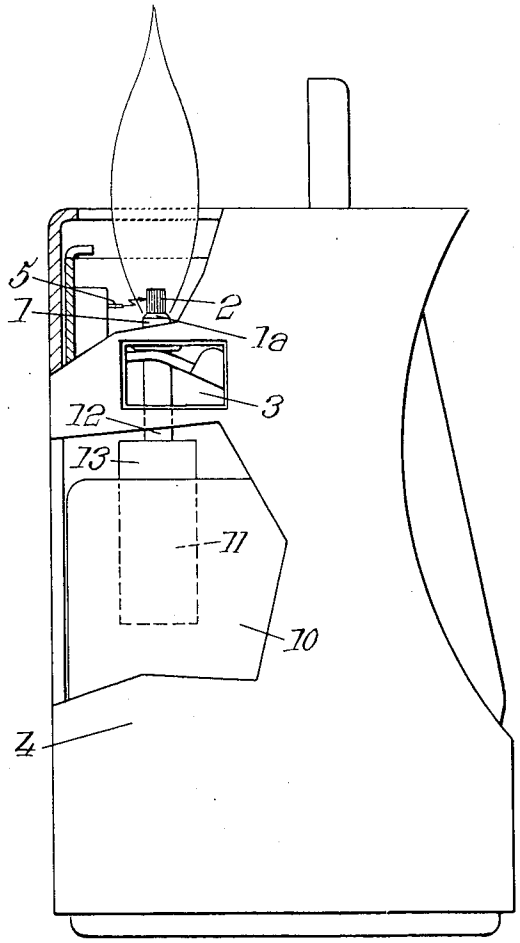

PATENTED SEP 17 1974

3,835,579

Fig. 1.

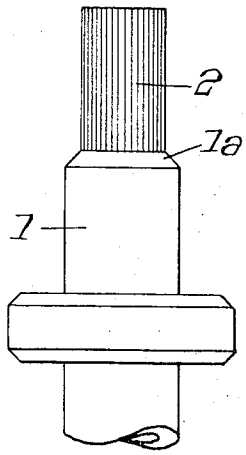

Fig. 2.

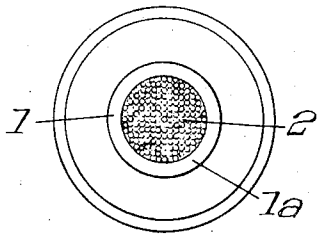

Fig. 3.

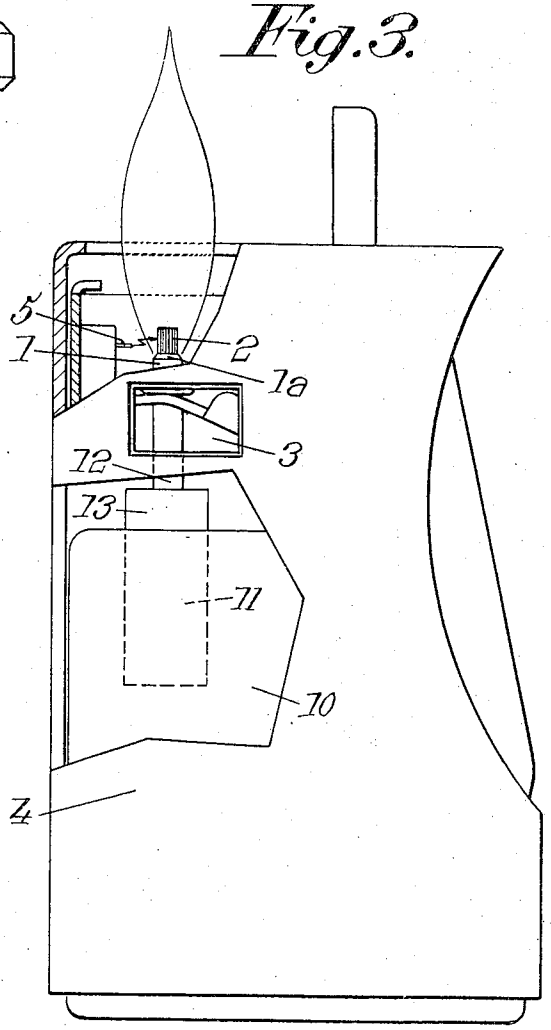

Fig. 4.

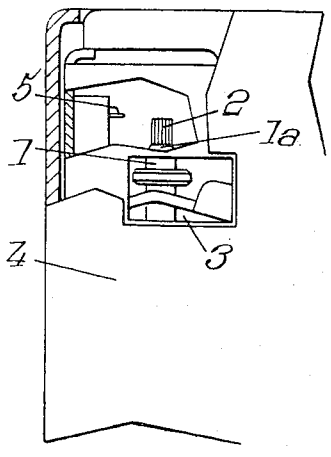

GAS LIGHTERS

The invention relates to gas lighters comprising a reservoir containing a liquefied gas and and an expansion device arranged to cause this liquified gas to pass from its liquid phase to its gaseous phase.

It is an object of the invention to provide gas lighters of which the flame better resists a blowing-out effect by a draft.

In fact, gas lighters known hitherto comprised a single tubular burner from which a jet of gas emerged which produced, due to the ambient combustion-supporting air, a flame "detached" from the end of said tubular burner, this flame being easily blown out by a draft; this "fragility" of the flame in a current of air constituted a considerable drawback and numerous difficulties have been encountered in attempting to produce gas lighters of the "storm lighter" type.

Such "storm lighters" had however been producible by resorting to special devices to protect the flame, but these special devices had the drawback of being cumbersome and unesthetic.

The gas lighter according to the invention comprises a reservoir containing a liquefied gas, an expansion device arranged to cause this liquefied gas to pass from its liquid phase to its gaseous phase, an escape passage comprising an outlet valve, and a tubular burner, and it is characterised by the fact that this tubular burner comprises, in the vicinity of its outlet, a bundle of wire-shaped elements arranged axially and projecting beyond the end of said tubular burner.

Due to this feature there is obtained a flame which is generated in the form of micro-flames on the projecting portion of the bundle of wire-shaped elements.

This flame remains "attached" to the tubular burner and resists the effect of blowing-out by a draft much better than a "detached" flame produced by a conventional burner.

Moreover, it is observed that a lighter equipped with such a tubular burner comprising the bundle of wire-shaped elements according to the present invention lends itself particularly well to ignition by an electric spark, for example to ignition by high voltage generated from the discharge of a capacitor, or to ignition by high voltage generated by a piezoelectric crystal device.

In fact, the flow of gas in the projecting part of the bundle of filiform elements can be easily lighted by a spark jumping between an electrode arranged at the level of the abovesaid projecting part and a projecting zone of this part.

Under these conditions, the invention provides that when the lighter comprises electric spark ignition means, at least one electrode is arranged at the level of the projecting part of the bundle of wire-shaped elements, the electric spark jumping between this electrode and the abovesaid projecting part.

The arrangement which has just been considered above introduces considerable progress with respect to the conventional electric spark iginition lighter in which, either one is obliged to resort to two electrodes arranged above the burner, or it was necessary to have a special arrangement of the burner (which arrangement is relatively complicated from the mechanical point of view) when said burner had to constitute an electrode itself.

The invention will in any case be well understood with the aid of the additional description which follows, as well as of the accompanying drawing, which additional description and drawing relate to a preferred embodiment of the invention and do not of course comprise any limiting character.

FIG. **1** of this drawing is a lateral view of the burner of a gas lighter constructed according to the invention.

FIG. **2** is a view from above of the burner of FIG. **1.**

FIG. **3** is a lateral view, with parts removed, of an electric spark ignition gas lighter according to the invention and shown ignited.

FIG. **4** lastly, is a partial lateral view of the lighter of FIG. **3,** but shown extinguished.

In FIG. **4** there is shown a gas lighter equipped with a tubular burner **1**; this gas lighter comprises a reservoir **10** containing a liquefied gas, and an expansion device **11** arranged, in manner known in itself, to cause this liquefied gas to pass from its liquid phase to its gaseous phase.

There is also provided an escape passage **12** comprising an outlet valve **13,** this escape passage **12** ending at the tubular burner **1.** This tubular burner **1** is shown in more detail in FIGS. **1** and **2,** and according to the invention it comprises, in the neighbourhood of its outlet, a bundle of wire-shaped elements **2** arranged axially and projecting beyond the end of said tubular burner **1.**

This bundle of wire-shaped elements **2** can advantageously be constituted by a bundle of wires which are preferably parallel between themselves and held by insertion into the tubular burner.

These wires can be solid or hollow and they are generally metallic, advantageously of steel.

The diameter of the wires constituting the bundle may be comprised between a tenth and a twentieth of the inner diameter of the tubular burner **1.**

The height of the part of the bundle which projects beyond the end of the tubular burner **1** may comprise between one and five times the internal diameter of the tubular burner **1**; advantageously this height is of the order of ten times the abovesaid diameter.

By way of example, it may be indicated that tests have been carried out with a gas lighter equipped with a tubular burner 1 of 5 mm internal diameter; the wires constituting the bundle were steel wires (piano wire) of 0.1mm diameter and the projecting part of the bundle was from 2 to 3 mm.

A lighter equipped with such a burner gave a flame which resisted a current of air of 5 to 6m/second.

Advantageously and as shown in FIGS. **3** and **4,** the lighter comprises at least one opening **3** formed in its casing **4** and arranged a little below the burner, the role of such an opening **3** being to facilitate the supply of combustion-supporting air.

The lighter shown in FIGS. **3** and **4** may be equipped with electric spark ignition means (not shown), such as for example ignition means by a high voltage generated from the discharge of a capacitor, or ignition means by a high voltage generated by a piezo-electric crystal device.

There is then provided an electrode **5** arranged at the level of the projecting part of the bundle of wire-shaped elements **2.**

Advantageously, this electrode **5** is situated at the same height as the end of this projecting part, when the burner corresponds to a closed position of the gas outlet valve (the lighter being extinguished FIG. **4**); this electrode **5** occuring then at the mid-height of the projecting part when the lighter is actuated, that is to say when the outlet valve is open and the high voltage is generated, the spark then jumps from this electrode **5** to the intermediate region of the projecting part of the bundle of wire-shaped elements **2** (lighter ignited FIG. **3**).

Finally, there is provided a gas lighter giving a flame capable of resisting, much better than that of a conventional burner, a blowing-out effect by a current of air.

This burner enables the production of gas lighters of the "storm lighter" type which are quite similar in appearance to conventional lighters and can be easily derived from conventional lighters, although gas "storm lighters" known up to the present were of quite a special conception, and generally rather unesthetic.

This burner lends itself to very certain and reliable ignition by electric spark in which the failures are counted as only some units in several thousand ignitions, the spark practically always causing ignition of the gas.

I claim:

1. Gas lighter comprising a reservoir containing a liquefied gas, an expansion device arranged to cause this liquefied gas to pass from its liquid phase to its gaseous phase, an escape passage comprising an outlet valve, and a tubular burner, said tubular burner comprising, in the vicinity of its outlet, a bundle of filiform elements arranged axially of and projecting beyond the end of said tubular burner, the diameter of the filiform elements of said bundle being between a tenth and a twentieth of the internal diameter of said tubular burner.

2. Lighter according to claim **1**, wherein the filiform elements of the bundle are constituted by wires parallel between themselves.

3. Lighter according to claim **1**, wherein the filiform elements of the bundle are solid.

4. Lighter according to claim **1**, wherein the filiform elements of the bundle are hollow.

5. Lighter according to claim **1**, wherein the filiform elements of the bundle are metallic.

6. Lighter according to claim **1**, wherein the bundle of filiform elements is held by insertion in the tubular burner.

7. Gas lighter comprising a reservoir containing a liquefied gas, an expansion device arranged to cause this liquefied gas to pass from its liquid phase to its gaseous phase, an escape passage comprising an outlet valve, and a tubular burner, said tubular burner comprising, in the vicinity of its outlet, a bundle of filiform elements arranged axially of and projecting beyond the end of said tubular burner, the height of that part of said bundle of filiform elements which projects beyond the end of said tubular burner being between one and five times the internal diameter of said tubular burner.

8. Lighter according to claim **7**, wherein said height is equal to twice said internal diameter.

9. Gas lighter comprising a reservoir containing a liquefied gas, an expansion device arranged to cause this liquefied gas to pass from its liquid phase to its gaseous phase, an escape passage comprising an outlet valve, and a tubular burner, said tubular burner comprising, in the vicinity of its outlet, a bundle of metallic filiform elements arranged axially of and projecting beyond the end of said tubular burner, and ignition means creating an electric spark, said ignition means including at least one electrode at the level of the projecting part of said bundle of metallic filiform elements, the electric spark jumping between said electrode and said projecting part.

10. Lighter according to claim **9**, wherein said electrode is situated at the same height as the end of the projecting part of the bundle when the burner corresponds to a closed position of the gas outlet valve, said electrode occurring at mid-height of said projecting part when the outlet valve is open and the high voltage is generated.

11. Gas lighter comprising a reservoir containing a liquefied gas, an expansion device arranged to cause this liquefied gas to pass from its liquid phase to its gaseous phase, an escape passage comprising an outlet valve, and a tubular burner, said tubular burner comprising, in the vicinity of its outlet, a bundle of filiform elements arranged axially of and projecting beyond the end of said tubular burner, and a casing enclosing said reservoir and said tubular burner, said casing having at least one opening arranged slightly below said tubular burner.

* * * * *