July 25, 1944. L. YOST 2,354,566

BENDING MACHINE

Filed July 10, 1941 3 Sheets-Sheet 1

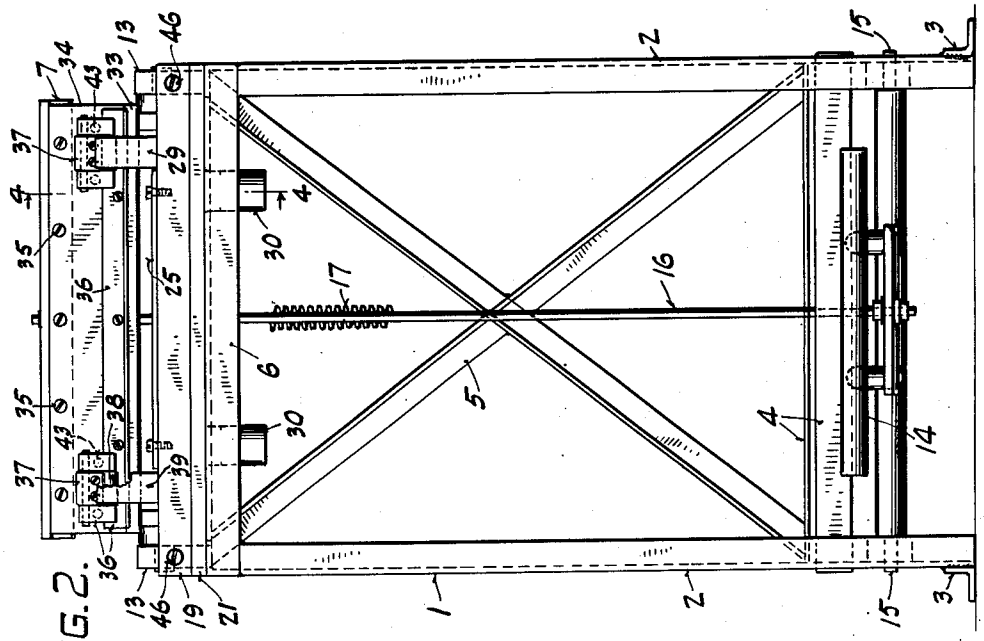

FIG. 2.

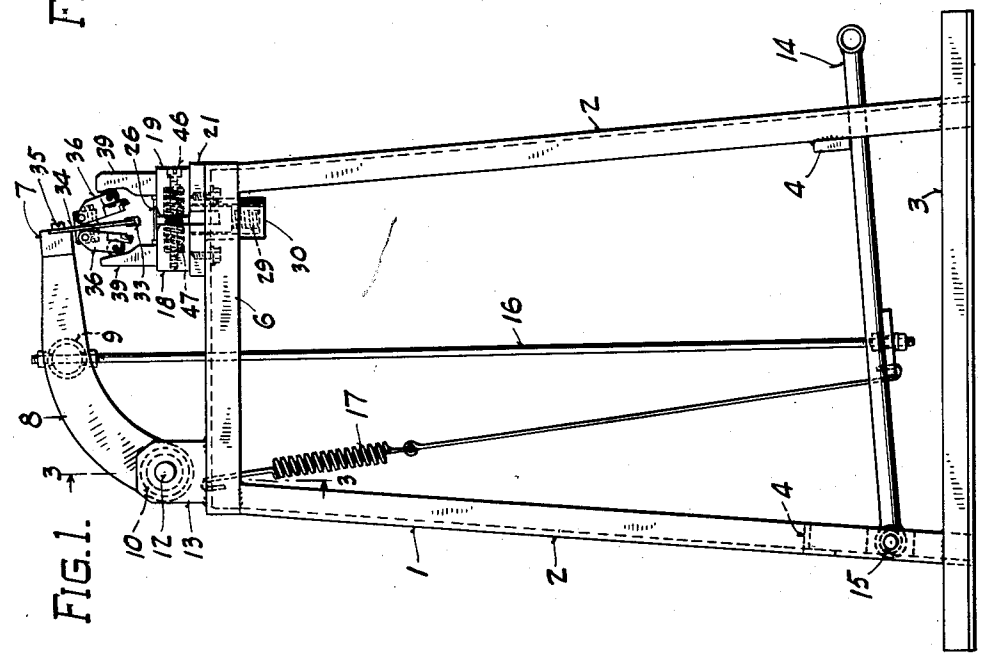

FIG. 1.

Lloyd Yost
INVENTOR.

BY Elwin C. Andrus
ATTORNEY.

July 25, 1944. L. YOST 2,354,566

BENDING MACHINE

Filed July 10, 1941 3 Sheets-Sheet 2

FIG. 3.

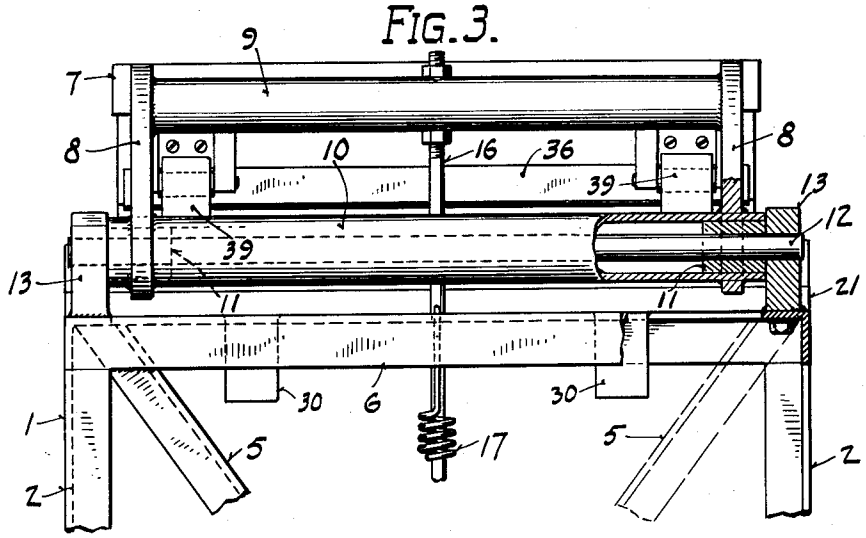

FIG. 4.

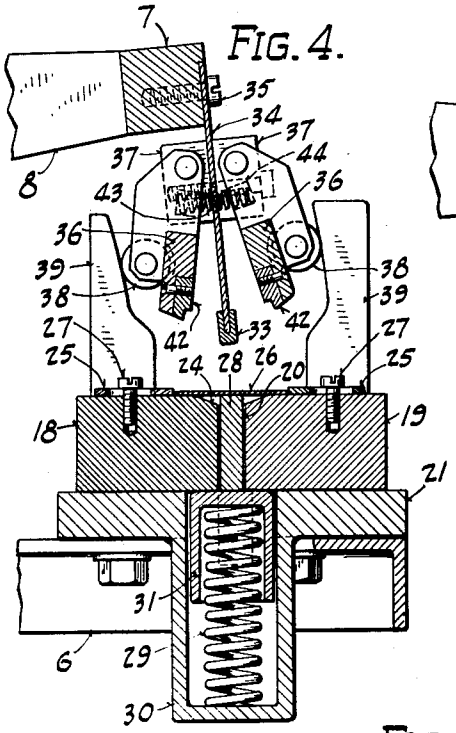

FIG. 5.

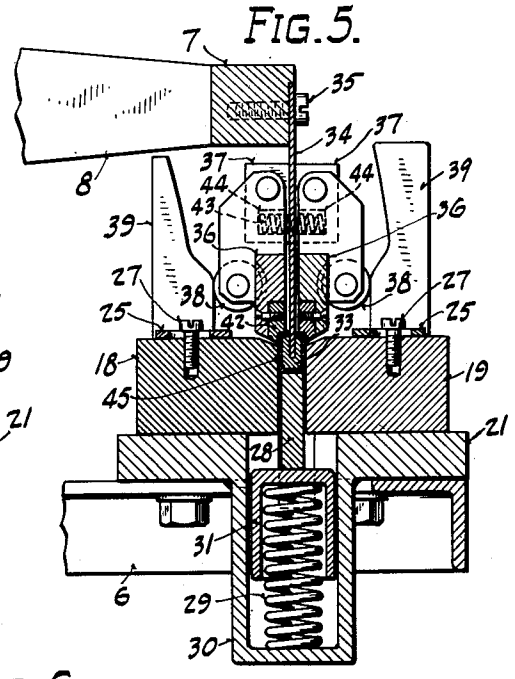

FIG. 6.

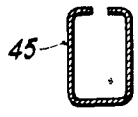

Lloyd Yost
INVENTOR.

BY Elwin A. Andrus
ATTORNEY.

July 25, 1944. L. YOST 2,354,566

BENDING MACHINE

Filed July 10, 1941 3 Sheets-Sheet 3

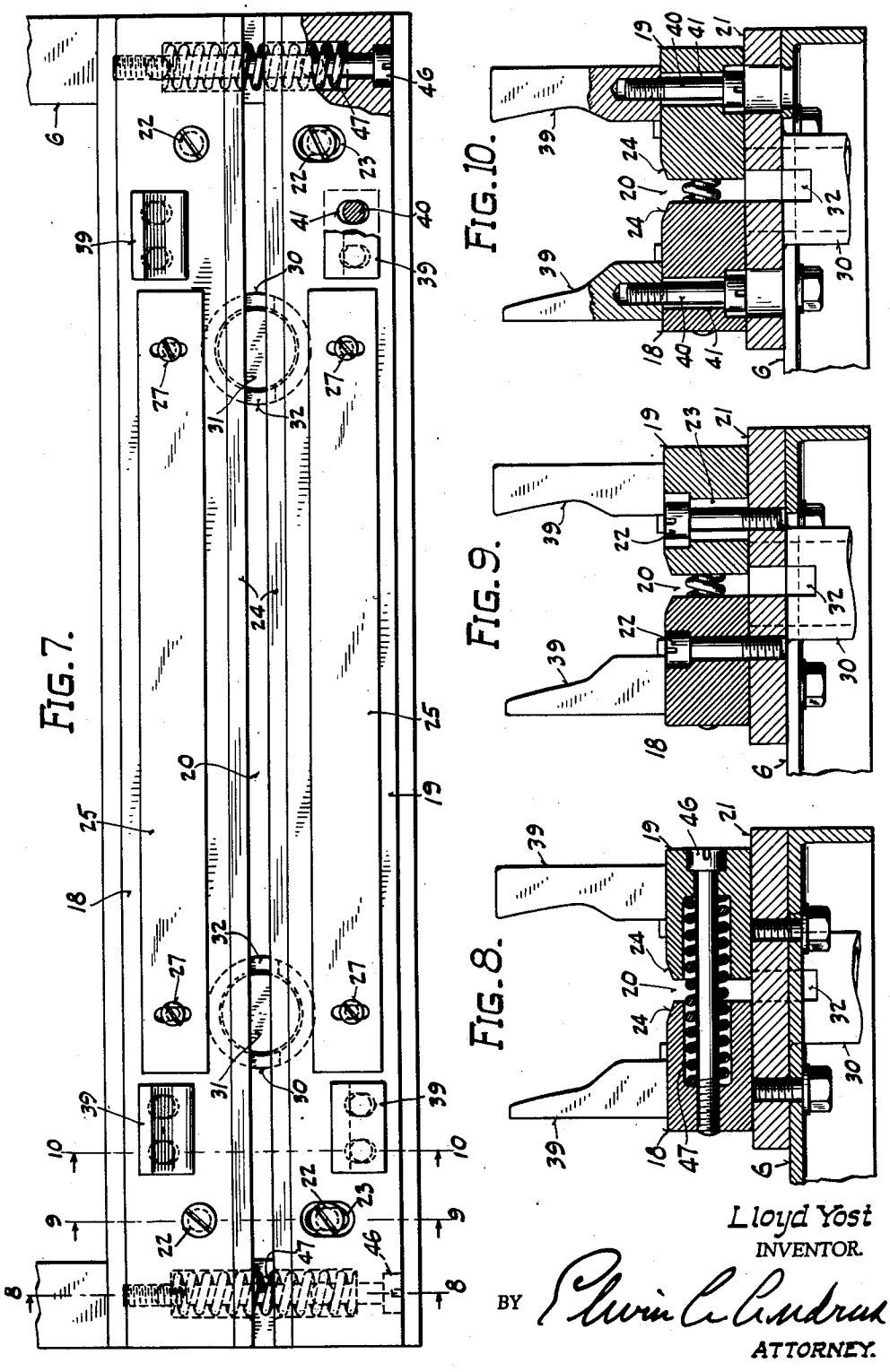

Lloyd Yost
INVENTOR.

BY Elwin C. Andrus
ATTORNEY.

Patented July 25, 1944 2,354,566

UNITED STATES PATENT OFFICE

2,354,566

BENDING MACHINE

Lloyd Yost, Los Angeles, Calif., assignor to A. O. Smith Corporation, Milwaukee, Wis., a corporation of New York

Application July 10, 1941, Serial No. 401,869

13 Claims. (Cl. 93—1)

This invention relates to a bending machine.

An object of the invention is to provide an improved device for bending paper.

Another object of the invention is to provide a simple and effective device for bending insulating paper into a form or shape suitable for insertion into the slots of electric motors or other electrical machinery.

A more specific object of the invention is to provide a simpler and more efficient mounting for driving the punch and to provide for laterally movable forming devices to bend the edges of the sheet inwardly at the end of the punch stroke.

These and other objects of the invention will be clear from the following detailed description and the accompanying drawings in which:

Figure 1 is an end elevation of the paper bending device embodying the invention;

Fig. 2 is a front elevation looking from the right in Fig. 1;

Fig. 3 is an enlarged rear elevation, partly in section on line 3—3 of Fig. 1, of the upper part of the paper bender;

Fig. 4 is an enlarged end view of the dies and punch, partly in elevation and partly in section on line 4—4 of Fig. 2;

Fig. 5 is a view generally similar to Fig. 4 and showing certain parts in the positions which they occupy at the end of the forming stroke;

Fig. 6 is a section showing the shape into which a strip of paper is bent by the device of this invention;

Fig. 7 is an enlarged top plan view of the bending dies;

Fig. 8 is a transverse section taken on line 8—8 of Fig. 7 showing the adjusting screw for determining the width of the slot in the dies;

Fig. 9 is a transverse section taken on line 9—9 of Fig. 7 showing the hold down screws for adjustably clamping the dies to the base; and

Fig. 10 is a transverse section taken on line 10—10 of Fig. 7 showing the screws for adjustably attaching the cams on each die.

In accordance with the invention in one of its phases the punch is suspended from a pivotal arm by means providing for straight line movement of the punch in the die, thereby preventing binding of the punch in the die and eliminating more expensive construction.

In another phase the invention provides additional forming devices on either side of the punch and operated by stationary cams to bend the sheet inwardly at the top of the punch.

Referring to the drawings, a stand 1 is provided consisting of inclined supports or legs 2, horizontal members 3 and 4, diagonal braces 5, and a top 6. The stand can be readily constructed from structural steel shapes and rolled plates welded together into a light but strong and rigid structure.

The punch beam 7 to which the punch is secured by means hereinafter described, is carried on two arms 8 which are welded to tubes 9 and 10. Near its ends the tube 10 is provided with internal bushings 11 which serve as bearings to allow rotation of the tube and its attached arms upon an axle 12 carried by supports 13 welded or otherwise fastened to table top 6.

A treadle 14 is pivoted to the rear legs of stand 1 at 15 and connected to the mid-point of tube 9 by link 16 passing through an opening in the table top 6.

The treadle is normally held in a raised position bearing against front cross member 4 by means of a spring 17. When the treadle is depressed, punch beam 7 is pulled downward and the punch attached to it is forced into the dies and bends the paper.

The die is made in two halves 18 and 19, one on each side of a slot 20 extending lengthwise of table top 6. The die halves are adjustably secured to a base 21 on the table top by bolts 22 one set of which extend through slots 23 in the die halves transverse to the length of the die halves to permit of their adjustment toward or away from each other for bending paper into forms of different width. The die halves are chamfered at their upper inner edges 24 to facilitate the entry of the paper into the die slot 20. Longitudinally extending guides 25 are fastened to the upper surfaces of the die halves to center the paper strips 26 that are to be bent. The guides are adjustably held in position by bolts 27 passing through transverse slots therein and are movable towards or away from each other to accommodate strips of different width.

A bar 28, movable vertically between the die halves, is pressed upward by two springs 29, one between each end and the center. The springs 29 are contained in cylinders 30 depending through the table top 6 from the bottom of base 21, and work against pistons or guides 31 which slide in the cylinders and bear against and support bar 28. The walls of the cylinders are provided with slots 32 to allow the bar 28 to be moved downward.

The punch 33 is mounted on the lower edge of a flexible metal sheet 34 which is secured by screws 35 to the punch beam 7. The punch 33 must move vertically downward between the die

halves while the punch beam 7 moves in an arc of a circle. The flexible metal sheet between the punch 33 and punch beam 7 bends laterally to provide the required freedom and eliminates the necessity for guides or linkage to produce a straight line motion of the punch beam.

When the treadle is pressed down the punch beam is depressed with it, clamping the paper strip 26 between the lower face of punch 33 and the upper face of bar 28. Continued downward motion of the punch forces the bar 28 downward between die halves 18 and 19 and bends the paper strip into a U shape.

The turning in of the legs of the U to produce the shape shown in Fig. 6 is done by swinging breaks 36, one on each side of the metal sheet 34. Each break extends longitudinally the full length of the punch and die and is pivotally mounted on blocks 37 fastened to the side of the metal sheet 34 at each end. Rollers 38 are mounted on the breaks to bear against stationary cams 39 adjustably secured to the die halves by bolts 40 disposed in transverse slots 41 in the die halves. Each of the swinging breaks is recessed longitudinally for the reception of a die segment 42 which can be readily removed and replaced by another for bending paper to a different shape. The cam rollers 38 are held against cams 39 by compression springs 43 interposed between the swinging breaks and retained in cavities 44 therein.

With the paper strip 26 that is to be bent positioned as shown in Fig. 4, the treadle is depressed forcing the punch downward. The action of the punch 33, bar 28, and die halves 18 and 19 bends the strip into a U shape as previously explained. At the same time the swinging breaks 36 are swung inward by the action of the cams 39 on cam rollers 38. At the conclusion of the forming stroke the punch, die halves, and swinging breaks are in the positions shown in Fig. 5. The treadle is then released. Springs 29 force bar 28 upward, pushing ahead of it the bent paper form 45 around punch 33. Upward motion of the bar 28 ceases when guides 31 in cylinders 30 reach the limit of their travel, but the punch beam 7 and its associated parts continue to move up under the action of spring 17 until they resume the positions shown in Fig. 4. The bent paper form is then slipped endwise off the punch, another paper strip is placed between guides 25, and the device is ready for another stroke.

The width of the slot can be adjusted readily by loosening the bolts 22 which pass through the slots 23 and then adjusting the transverse screw 46 at each end. These adjusting screws pass through die halves 18 and 19 and hold them from spreading apart, while coil springs 47 disposed around the screws and in enlarged holes in the die halves push the latter apart against the screws. After adjustment of screws 46 the screws 22 are again tightened.

Punches of different size may be provided and readily interchanged for forming paper into different shapes and sizes. The cams 39 may be shaped to give any desired stroke to breaks 36.

Various embodiments of the invention may be employed within the scope of the accompanying claims.

I claim:

1. In a bending machine, a die, a punch movable in substantially a straight line after entering the die, a member for driving the punch constrained to move in substantially a circular arc toward or away from the die, and a laterally flexible member between the punch and its driving member secured to both.

2. In a bending machine, a die with a yieldable bottom, a punch movable in substantially a straight line after entering the die, a member for driving the punch constrained to move in substantially a circular arc toward or away from the die, and a laterally flexible sheet between the punch and its driving member secured to both.

3. In a bending machine, fixed die segments, a resiliently mounted die segment movable in substantially a straight line after entering the fixed die segments, a member for driving the punch movable in substantially a circular arc towards or away from the die, a laterally flexible sheet between the punch and its driving member secured to both, a swinging break pivotally connected to a point of attachment which moves in synchronism with and in the same general direction as the punch, and means to force the swinging break towards the punch as the bending stroke of the punch progresses.

4. In a bending machine, fixed die segments, a resiliently mounted die segment movable with respect to the fixed die segments, a punch movable in substantially a straight line after entering the fixed die segments in opposition to said movable segment, a member for driving the punch movable in substantially a circular arc towards or away from the die, a laterally flexible sheet between the punch and its driving member secured to both, a swinging break pivotally mounted on each side of the flexible sheet intermediate its attachment to the punch and punch driving member, and cams to force the swinging breaks towards the punch as the bending stroke of the punch progresses.

5. A bending machine comprising a stand, die segments secured to the stand, arms pivotally mounted on the stand, a punch beam carried by the arms substantially parallel to the die segments, a punch, a laterally flexible sheet between the punch and punch beam secured to both, a swinging break pivotally mounted on each side of the flexible sheet, springs to bias the swinging breaks outward and away from the flexible sheet and punch, cams to force the swinging breaks towards the punch as the bending stroke of the punch progresses, and means to move the punch beam toward the die to force the punch into the die.

6. In a machine for bending a flat sheet, a die having an opening to receive the sheet in the forming operation, a punch for bending the sheet into the opening in the die, a pivoted arm for driving said punch, and a laterally movable member for suspending the punch from said arm to translate the arcuate movement of the arm into a substantially straight line movement in alignment with the die opening.

7. A sheet bending machine comprising a pair of relatively fixed die segments providing a slot therebetween, a punch disposed to enter said slot to bend the sheet into a U shape, side forming devices carried by the punch and disposed on opposite sides thereof, resilient means biasing said devices outwardly away from one another, and stationary cams engaged by said devices as the punch moves into the die to move said devices toward one another to effect the inward folding of the longitudinal edges of the blank.

8. A sheet bending machine comprising a pair of relatively fixed die segments providing a slot therebetween, a punch disposed to enter said slot to bend the sheet into a U shape, and side forming

devices carried by the punch and operable by the movement of said punch to engage fixed cams and simultaneously bend the edges of the sheet toward each other around the punch.

9. In a device of the class described, a base, a pair of die segments mounted on said base to provide a slot therebetween, means at the ends of the segments and above the base for securing said die segments to each other to prevent lateral separation of the same and at the same time provide for ready adjustment in the width of the slot therebetween, and means for securing said segments in adjusted position to said base.

10. In a bending machine, a punch disposed for reciprocating movement into and out of a die, a swinging break pivotally connected to the punch, and a fixed abutment engaged by the break to force the same towards the punch as the bending stroke of the punch progresses.

11. In a bending machine, a punch disposed for reciprocating movement into and out of a die, a swinging break pivotally mounted on each side of the punch to travel therewith, and cams fixedly disposed to be engaged by said breaks as the punch moves toward completion of its bending stroke and force the breaks toward one another.

12. In a bending machine, a punch disposed for reciprocating movement, a side forming device carried by and pivotally mounted on each side of the punch, means biasing said devices away from the punch, and stationary means to force said devices toward each other and against said punch as the latter progresses in its working stroke.

13. In a bending machine, a punch disposed for reciprocating movement, a side forming device carried by and pivotally mounted on each side of the punch, a spring biasing said devices laterally away from the punch, and stationary cams disposed on the opposite sides of the punch to engage said devices as the punch progresses in its working stroke and force the devices inwardly against the blank being formed.

LLOYD YOST.