Sept. 18, 1962 E. D'AMATO 3,054,217

SPHERE SPINNING DEVICE

Filed Oct. 17, 1960 4 Sheets-Sheet 1

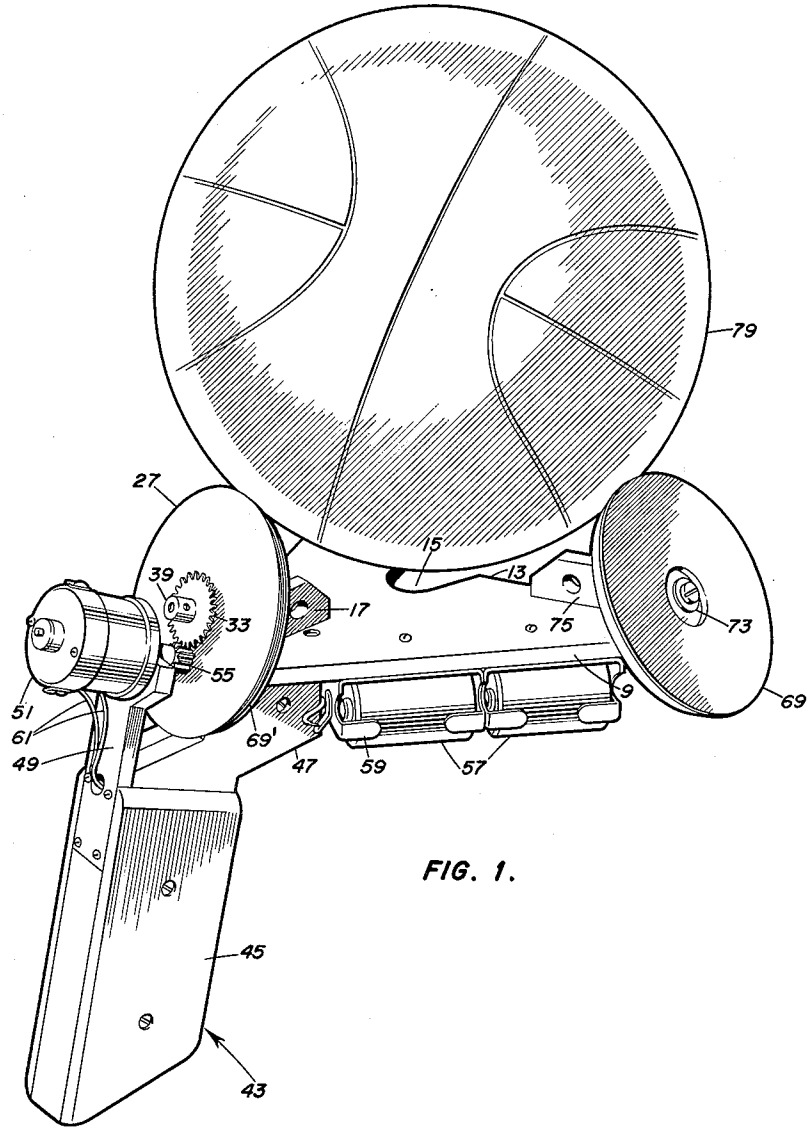

FIG. 1.

INVENTOR
Ernest D'Amato

BY Peck & Peck
ATTORNEYS

Sept. 18, 1962 E. D'AMATO 3,054,217

SPHERE SPINNING DEVICE

Filed Oct. 17, 1960 4 Sheets-Sheet 2

FIG. 2.

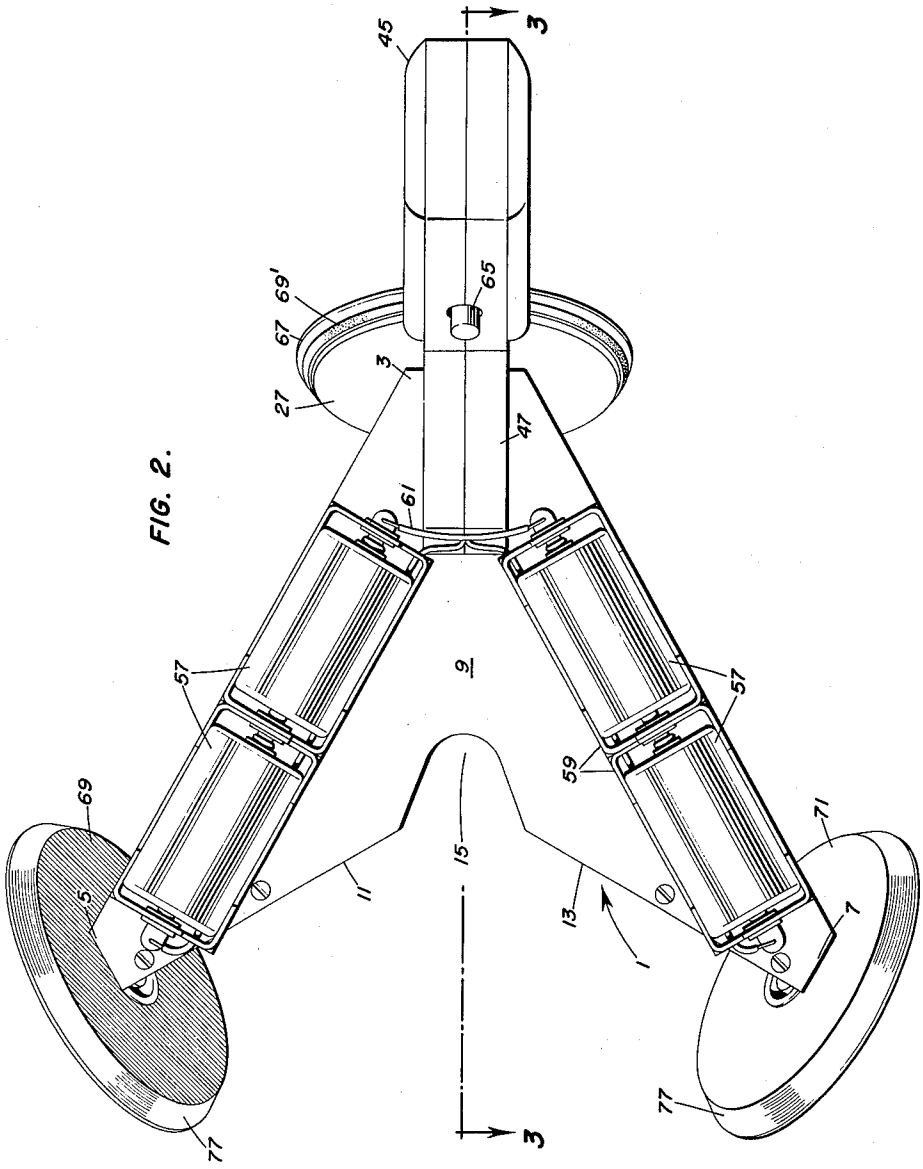

INVENTOR

Ernest D'Amato

BY

Peck & Peck

ATTORNEY

Sept. 18, 1962 E. D'AMATO 3,054,217

SPHERE SPINNING DEVICE

Filed Oct. 17, 1960 4 Sheets-Sheet 3

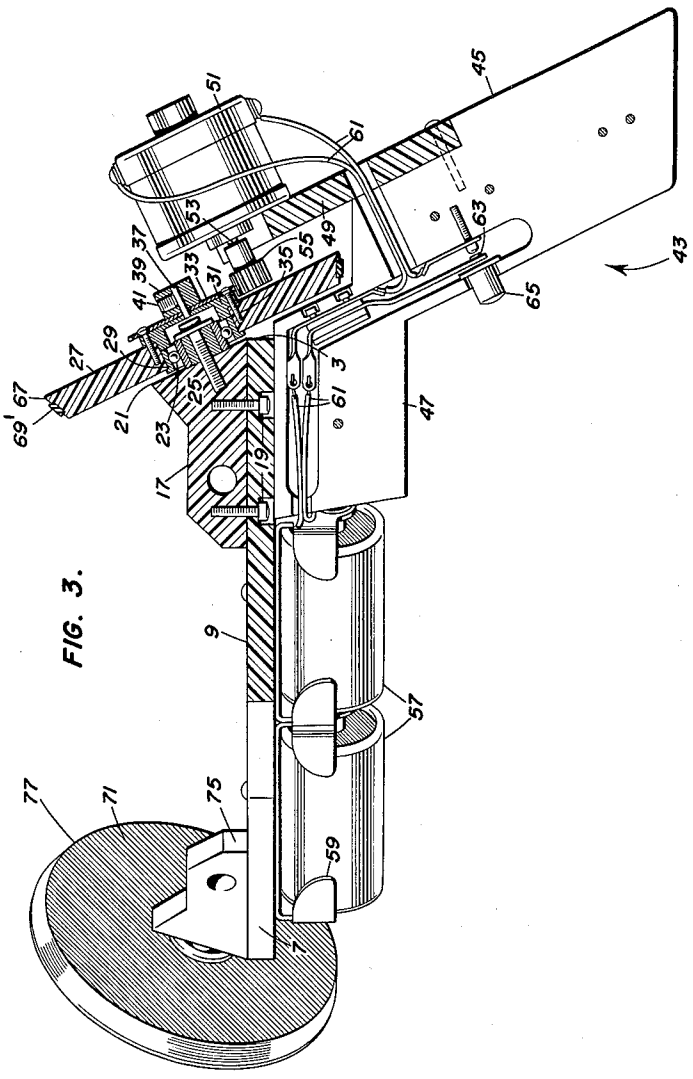

FIG. 3.

INVENTOR
Ernest d'Amato

BY Peck & Peck
ATTORNEYS

Sept. 18, 1962 E. D'AMATO 3,054,217

SPHERE SPINNING DEVICE

Filed Oct. 17, 1960 4 Sheets-Sheet 4

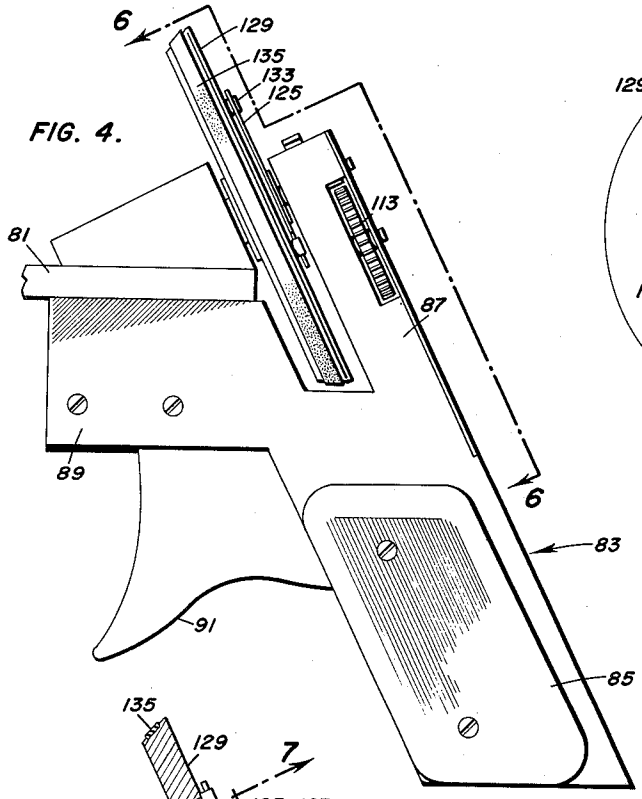

FIG. 4.

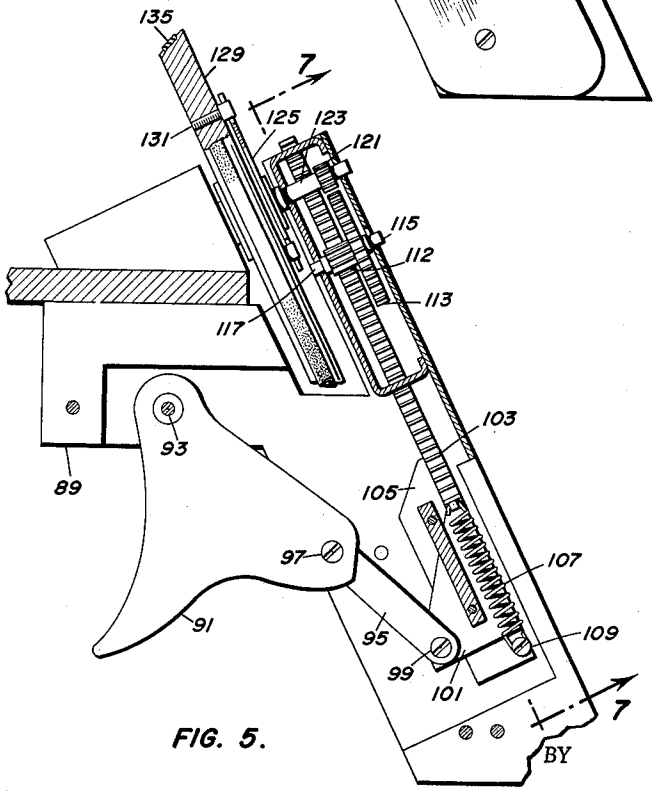

FIG. 5.

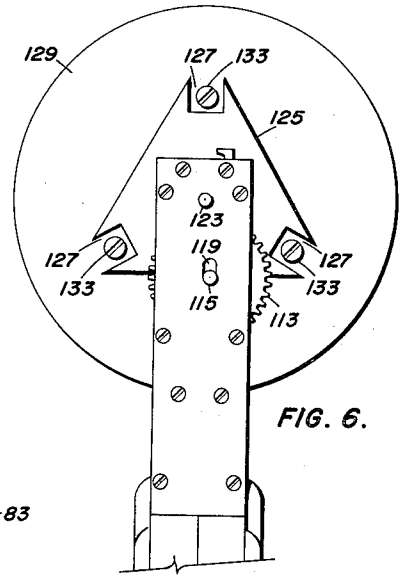

FIG. 6.

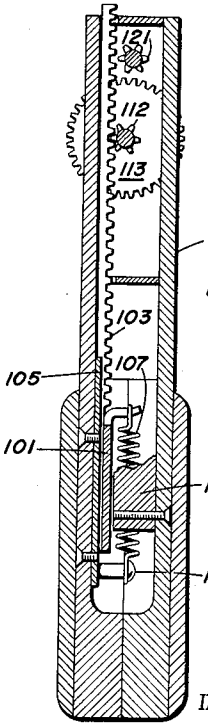

FIG. 7.

INVENTOR

Ernest D'Amato

BY

Peck & Peck

ATTORNEYS

United States Patent Office 3,054,217
Patented Sept. 18, 1962

3,054,217

SPHERE SPINNING DEVICE

Ernest D'Amato, 147—37 Roosevelt Ave., Flushing, N.Y.

Filed Oct. 17, 1960, Ser. No. 63,200
5 Claims. (Cl. 46—243)

This invention relates broadly to the art of spinning or causing rotation of spherical objects, balls and the like, and in its more specific aspects it relates to a device operable to mount a spherical object, cause it to spin while providing means facilitating removal of the spinning sphere from the device to a support such as a finger tip, rod or the like for its continued spinning or rotation thereon; and the nature and objects of the invention will be readily recognized and understood by those skilled in the art to which it relates in the light of the following explanation and detailed description of the accompanying drawings illustrating what I at present believe to be the preferred embodiment or mechanical expressions of my invention from among various other forms, arrangements, combinations and constructions, of which the invention is capable within the spirit and scope thereof.

In the performing arts it is not uncommon for jugglers or performers having skill and dexterity to cause a spherical object to spin and then while it is still spinning to mount it on a finger tip, rod or the like and to balance it while it continues its rotatory action. Great skill and dexterity is required to accomplish this feat and the secret of success lies in one's ability to cause the sphere to rotate at a sufficient speed so that its axis of rotation will remain substantially constant or vertical not only while spinning but also while being transferred to a finger tip or other support for its continued rotation. Change of axis of rotation will cause wobbling of the sphere or ball, upset the equilibrium thereof and cause the sphere to spin away from its support. To achieve the skill of a juggler in this field requires a degree of inherent balancing dexterity and also many hours of practice. It has been my experience that without a certain amount of natural skill and long practice it is not possible to mount a spinning sphere on a finger tip, rod or the like, balance it and keep it spinning or rotating.

One of the many problems inherent in the art of generating rotation in a sphere and then transferring it to a relatively thin support for its continued balanced rotation thereon, is to make the transfer while maintaining the axis of rotation of the sphere. This is extremely difficult to accomplish because radial pressures will normally be applied to the sphere during the transfer operation and such radial pressures will upset the equilibrium of the rotating sphere and make its balanced rotation on the finger tip or the like impossible.

I have overcome the aforementioned and other problems which have been encountered in this art by providing an ingenious device which will produce the desired speed of rotation in a sphere while not permitting substantial deviation of the axis of rotation thereof. Not only does my device generate such a rotative condition in the sphere but it also provides means whereby the sphere which is rotating on the device may be transferred therefrom to a finger tip or the like for the continued balanced spinning thereof. The device which I have evolved facilitates and simplifies this transferring operation for it is so constructed and designed that radial forces which would upset or change the axis of rotation are substantially eliminated.

In devising this sphere spinning device I have been concerned with a structural organization and arrangement which will provide fun and amusement for persons of all ages without any particular juggling or balancing skill for I have made its operational technique simple and

easy so that with a minimum amount of practice one may cause rotation of the sphere and then transfer the spinning sphere to a finger tip for its continued balanced rotation thereon.

The device has been designed for use with relatively light spheres or balls of varying diameters within limits, of course. As a matter of fact the versatility of my device will be recognized when it is understood that sports balls which may be bought in usual trade channels may be used as the spinning sphere, in other words my device does not demand a sphere having unusual, uncommon or particularly unconventional characteristics.

I have devised a sphere spinning device which is economical to produce, may be manually operated or motor operated and under normal conditions of use will not wear out, deteriorate or require maintenance.

With the foregoing general object, features and results in view, as well as certain others which will be apparent from the following explanation, the invention consists in certain novel features and designs, construction, mounting and combination of elements, as will be more fully and particularly referred to and specified hereinafter.

Referring to the accompanying drawings:

FIG. 1 is a view in perspective of the preferred form of my sphere spinning device with a sphere mounted thereon in position to be rotated.

FIG. 2 is a bottom plan view of the device of FIG. 1.

FIG. 3 is a view taken on line 3—3 of FIG. 2.

FIG. 4 is a view in side elevation of a modified or manually operable form of my device with parts thereof broken away.

FIG. 5 is a view similar to FIG. 4 with casing parts broken away and illustrating the operating mechanism.

FIG. 6 is a view taken on line 6—6 of FIG. 4.

FIG. 7 is a view taken on line 7—7 of FIG. 5.

In the accompanying drawings I have used the numeral 1 to designate in its entirety the supporting base of my device which comprises a substantially rigid plate-like member which may be made of plastic, light weight metal or of any other suitable material. The supporting base 1 is of generally V-shaped configuration providing a rear apex 3, a pair of spaced forward apices 5 and 7, all of which are connected by a body portion 9. The rear edges of the body portion 9 are of forwardly diverging form as at 11 and 13 and at their rearward or inner ends are formed to provide a finger notch 15, which notch is actually formed in the forward end of the body portion 9 of the base plate 1. The purpose of finger notch 15 will become apparent as this description proceeds.

Mounted on the upper side of supporting base 1 extending forwardly from apex 3 is a bearing bracket 17 which may be fixed to the base plate in any suitable manner as by screws 19. The rear face 21 of the bearing bracket is angled forwardly relative to a plane perpendicular to the plane of body portion 9 of supporting base 1 and a ball bearing assembly 23 is fixed to the bracket by means of a stud or the like 25. Disc shaped drive roller 27 of plastic, light metal or other suitable material is formed with a central opening which receives the ball bearing assembly therein, the edge of the opening being fixed to the outer race 29 of the bearing assembly by cementing or by a press fit or in any other suitable way. I provide a circular cap 31 which extends over and beyond the opening in the drive roller and has fixed thereto a gear 33 by means of screws 35 which extend therethrough and through the cap, and are threaded into drive roller 27. The gear 33 is centered by means of a post 37 which extends with a friction grip through a central opening in the cap and a hub 39 is fixed to post 37 by means of a set screw 41.

I provide a handle designated generally by the numeral

43, the handle consisting of a depending hand grip portion 45 having a forwardly extending portion 47 which is fixed to the underside of body 9 of supporting base 1 and functions to connect the handle to the base. An arm 49 extends upwardly from hand grip portion 45 and on its upper end supports an electric motor 51 having a shaft 53 extending forwardly from the motor. A pinion 55 is fixed to the motor drive shaft and is in mesh with gear 33. I mount a series of electric batteries 57 on the under side of the supporting base, such batteries may be removably mounted in any suitable clamp brackets or the like 59. Conductors 61 connect the batteries with the motor for powering the latter, and I interpose a suitable electric switch 63 controlled by push button 65 for controlling operation of the motor.

Thus, when switch 63 is closed by depression of the push button the motor will operate and gear 33 will be rotated by pinion 55. Rotation of gear 33 which is connected to drive roller 27 will cause rotation of the latter on its ball bearing assembly.

The drive roller 27 is mounted on its bracket at such an angle with respect to the supporting base 1 so that the included angle between the roller and base is from 45° to 90°, and I have experienced excellent results when such angle is on the order of 60°.

The peripheral edge 67 of roller 27 is bevelled forwardly and inwardly and has fixed thereto an annular ring 69′ of any suitable friction material.

Rotatably mounted at the apex 5 is a disc shaped supporting roller 69 while a further disc shaped supporting roller 71 is rotatably mounted at apex 7. Each roller is rotatably supported in a conventional manner on a ball bearing assembly 73 which is supported on a bearing bracket 75 which is fixed to the under side of the supporting base. The rollers 69 and 71 are of the same diameter as drive roller 27 and the peripheral edges 77 have the same angle of bevel as the described edge of roller 27. The rollers 69 and 71 also extend in the same angular relationship to base plate 1 as does drive roller 27.

Referring particularly to FIG. 1, wherein a spherical object or ball 79 is illustrated mounted in operative position on the device for being rotated to a desired speed for removal from the device for continued spinning on a finger tip, rod or the like. It will be recognized from consideration of the drawings that the drive roller 27 and the supporting rollers 69 and 71 provide a three point support organization for the spherical object, and that the projected planes of said disc shaped sphere supporting rollers and the drive roller form an equilateral triangular pyramid, and that the axis of rotation of the spherical object is coincident with the major axis of the pyramid. The notch 15 is formed in the supporting base and extends rearwardly therein to a point substantially aligned with the axis of rotation of the spherical object. The angular relation of each roller with respect to the supporting base and the bevel of the edges of the rollers ensures against any wedging or other undesirable action occurring against the sphere.

With the device held by the handle and the ball supported at the three points by the three rollers the spinning operation may be started by depressing the switch button 65 whereupon the drive roller will be caused to rotate and will cause spinning or rotation of the sphere without slipping due to the friction action of the annulus 69. When the sphere has reached the desired rotative speed the operator of the device inserts the index finger of his free hand upwardly through the notch 15 into contact with the spinning sphere and with his finger lifts the spinning sphere from its supported position on the three rollers and after the sphere is so lifted the device is moved laterally from beneath the sphere and the operator then has the sphere spinning on his finger tip. It is to be understood that a rod, stick or the like could be used instead of the finger.

In this operation of transferring the sphere from the spinning device it will be appreciated that no upsetting radial or other forces are applied to the rotating sphere so that its axis of rotation remains constant to facilitate the balancing operation. Since the notch 15 is positioned at the mid point between the rollers, that is the notch is located an equal distance from each roller, the lifting of the sphere by the finger will occur on the axis of rotation so no upsetting forces are generated by the finger contacting operation.

It will now be appreciated that the device which I have evolved provides means whereby one who is not a skilled juggler and who may not be unusually dexterous may spin a sphere or ball on the tip of his finger or on a rod, stick or the like. This device will afford substantial amusement to young and old alike and also will be of value to those performers who are skilled in this particular field.

As I have stated above my invention is operable by manual means as well as by automatic or electric means. In FIGS. 4 through 7 of the drawings I have illustrated a manually operated sphere spinning device which includes the same supporting base which I have described in connection with the preferred form of my invention. While I have not illustrated the supporting base in full in the modified or manual form of my invention, nor have I illustrated the two supporting rollers, they are of the same structure, angled the same and mounted the same as the supporting rollers 69 and 71 disclosed in FIG. 1 of the drawings.

In this modified form of my invention I have shown a part (the rear part) of the supporting base and I have designated it by the numeral 81. The handle is designated generally by the numeral 83 and involves a hand grasp portion 85 of generally hollow construction from which hand grasp portion upwardly extends an arm 87 which supports and mounts certain of the operating mechanism as will be hereinafter described. The handle is rigidly attached to the supporting base 81 by means of a bracket 89 which is fixed to the underside of the supporting base in any suitable manner. A trigger or operating lever 91 is pivotally mounted as at 93 to the bracket 89. A link 95 is pivotally connected at one end as at 97 to the rear end of the trigger and at its other end is pivotally connected as at 99 to a segmentary slide member 101 which is mounted within the hollow handle for sliding movement therein. At its forward end the slide member is fixed to a rack 103 which is adapted to slide within the handle and the arm 87 and is maintained in position by means of a plate 105 which is fixed to the inside of the handle. The sliding member is biased to rearward or retracted position by means of a spring 107 fixed to the sliding member and to a pin 109 fixed to the handle. A supporting flange 111 may be provided for keeping the sliding member in proper operating position. In the arm 87 I rotatively mount a pinion 112 which is in mesh with the rack and is, of course, rotated thereby when the rack is reciprocated. Fixed on the shaft of the pinion is a gear 113, the shaft ends 115 and 117 of the pinion and gear being mounted in elongated slots 119 in the walls of the handle to permit some longitudinal motion of the shafts and the gear and pinion. I provide a further pinion 121 which is journalled in the walls of the handle and is normally out of mesh with the gear 113 but is aligned therewith. The shaft 123 of the pinion 121 extends through the forward wall of the handle portion 87 and mounts on its outer end a drive plate 125 which is formed with three peripheral notches 127 for a purpose to be hereinafter described and made clear.

In this form of my invention I provide a drive roller 129 which is generally similar to and operates in substantially the same manner as the drive roller 27 which has hereinbefore been described in connection with the preferred form of my invention as illustrated in FIG. 1 of the drawings. The drive roller 129 is provided with three circumferentially spaced studs 131, the heads 133

of which project from the rearward face of the drive roller. With the device assembled the drive plate **125** is in relatively tight engagement with the rear face of the drive roller and the heads **133** of the studs extend into the notches **127** which are formed in the periphery of the drive plate. It will be noticed that the width of the notches is greater than the diameter of the heads of the studs. This provides for easy assembly of the components of the device, and endows the device with certain operating advantages. As in the case of the drive roller of the preferred form of my invention the drive roller **129** may be provided with a friction ring **135**. It is also to be understood that the drive roller **129** is angled with respect to the supporting base **81** the same as the drive roller **27** of FIG. 1 of the drawings.

With the device in operative condition as described and a sphere being placed on the drive roller **129** and the two supporting rollers, which are exactly the same as the supporting rollers **69** and **71** of FIG. 1 and are related to each other and to the drive roller in the same manner as those formerly described rollers, the spinning operation may be commenced. The operator holds the device by the handle in one hand and with a finger operates the trigger or operating lever with a pumping action to reciprocate the rack, which on its forward operative stroke rotates gear **113** and moves it and its shaft forwardly in slots **119** so that on this operative stroke gear **113** meshes with pinion **121** to cause rotation of drive plate and the drive roller. On the return stroke under the biasing action of spring **107** the gear **113** and pinion **121** will not be in mesh and reverse rotation will not occur. The operation of transferring the fully spinning sphere from the device is the same as that described in connection with the device of FIG. 1 and will not now be repeated.

It is to be clearly understood that it is within my contemplation to use the device without providing means for driving the drive roller which forms one support point of the three point support for the sphere. In other words my concept covers a device which consists of the handle, the supporting base and the three rollers which mount the sphere. When used in this manner without the drive roller, the sphere which is mounted on the three rollers would be spun by the other hand of the operator and then removed from the device in the manner which has been described above.

It must also be recognized that the arrangement and mounting of the batteries may be varied and other manual operating means than those disclosed may be used without departing from the spirit and scope of my invention.

I claim:

1. A device for spinning a sphere and adapted for removal of said sphere therefrom to a separate support for its continued rotation thereon, including a supporting base having a forward edge and a rear edge, spaced apart rotatable sphere supporting means mounted on and extending above said supporting base, the lines of contact on each of said sphere supporting means being in planes forming an equilateral triangular pyramid, the axis of rotation of the sphere being coincident with the major axis of said pyramid, said supporting base having a notch formed in the forward edge thereof and extending rearwardly to a point substantially aligned with said axis of rotation of the sphere for insertion of a separate support into said notch and into engagement with the sphere for removing the sphere from said sphere supporting means.

2. A device for spinning a sphere in accordance with claim 1, wherein said spaced apart rotatable sphere supporting means are disc shaped and the projected planes of said disc shaped sphere supporting means form said equilateral triangular pyramid.

3. A device for spinning a sphere in accordance with claim 1, wherein a handle is fixed to and depends from the rear edge of said supporting base opposite the notch formed therein, for manually holding the device during the sphere spinning operation.

4. A device for spinning a sphere in accordance with claim 3, wherein said spaced apart rotatable sphere supporting means comprise disc shaped rollers and one of said rollers is a drive roller to cause spinning of said sphere, a manually actuated operating lever mounted on said handle, and means connecting said operating lever with said drive roller for causing rotation of said drive roller when the operating lever is actuated.

5. A device for spinning a sphere in accordance with claim 3, wherein said spaced apart rotatable sphere supporting means comprise disc shaped rollers and one of said rollers is a drive roller to cause spinning of said sphere, an electric motor mounted on said handle and means connecting said electric motor with said drive roller for causing it to rotate, and a source of electric power for said electric motor mounted on said supporting base and electrically connected to said electric motor.

References Cited in the file of this patent

UNITED STATES PATENTS

1,029,904	Allegretti	June 18, 1912
2,248,596	Wilsey	July 8, 1941
2,263,602	Whittle	Nov. 25, 1941