Jan. 25, 1966 J. W. SCHROETER ET AL 3,231,022

AXIAL FAN CONSTRUCTION

Filed March 9, 1964

Fig. 1.

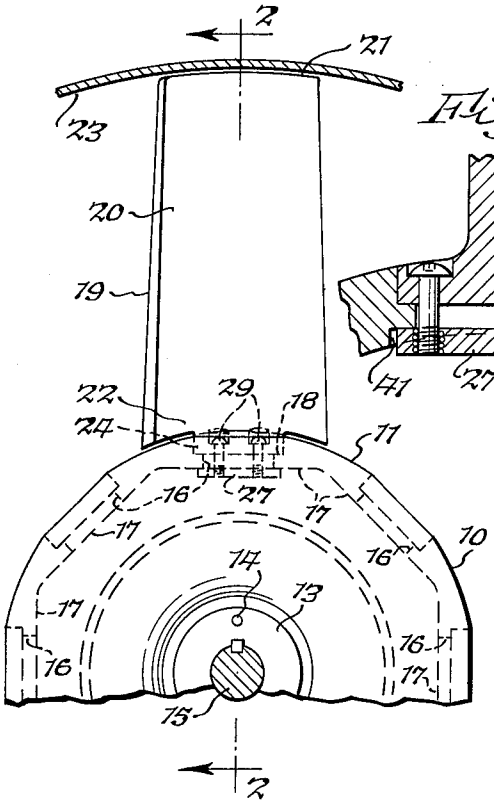

Fig. 2.

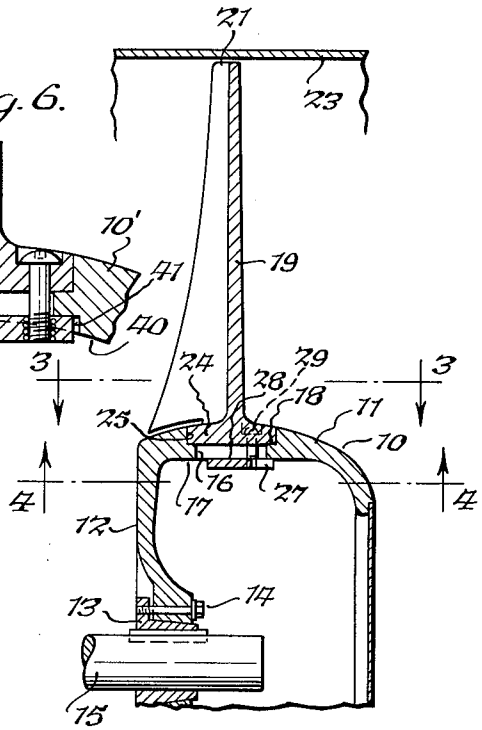

Fig. 6.

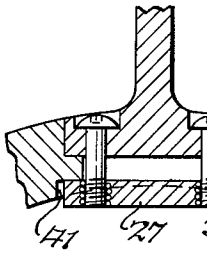

Fig. 4.

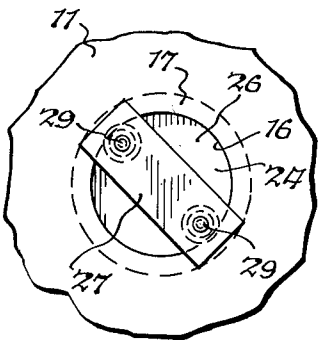

Fig. 3.

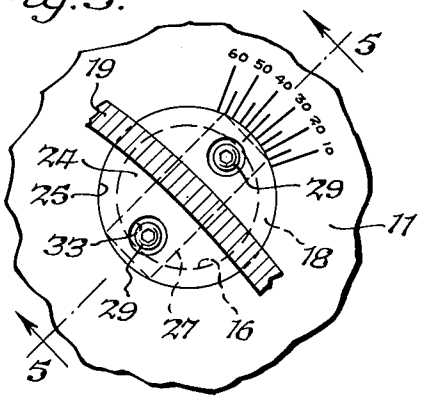

Fig. 5.

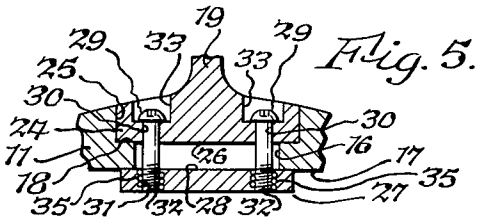

INVENTOR.
Joachim W. Schroeter
and Derrel N. Stewart
Joseph P. Dastel
ATTORNEY.

United States Patent Office

3,231,022

Patented Jan. 25, 1966

1

3,231,022
AXIAL FAN CONSTRUCTION

Joachim W. Schroeter, Depew, and Derrel N. Stewart, Hamburg, N.Y., assignors to Buffalo Forge Company, Buffalo, N.Y., a corporation of New York

Filed Mar. 9, 1964, Ser. No. 350,376
2 Claims. (Cl. 170—160.6)

The present invention relates to an axial fan and more particularly to an improved construction for adjustably mounting individual fan blades on an associated hub.

In the past various constructions have been utilized for mounting fan blades on the hub of an axial fan. However these constructions have had certain shortcomings. More specifically, certain of these constructions required access to the inside of the hub for the purpose of adjusting the pitch of the blades. With such constructions it was extremely difficult to vary the pitch of the blades because the securing structure on the inside of the hub was not easily accessible. Furthermore while other prior constructions permitted the adjustment of the pitch of the blades from the outside of the hub, such constructions were either relatively complex or were inherently incapable of providing a permanent tight connection between the blade and the hub which resulted in the loosening of the blades with the attendant changing of their pitch during fan operation. It is with the overcoming of the foregoing shortcomings of prior axial fan constructions that the present invention is concerned.

It is accordingly an important object of the present invention to provide an improved axial fan construction which permits replaceable blades to be both selectively adjusted from a position external to the hub and which also includes an improved structure for securely locking said blades in their adjusted position against changing of pitch during operation.

Another object of the present invention is to provide an improved axial fan construction having selectively replaceable and adjustable blades which utilizes an extremely simple attaching structure for securing the blades to the hub. Other objects and attendant advantages of the present invention will readily be perceived hereafter.

The improved axial fan construction of the present invention includes a hub having radially spaced internal and external planar wall portions associated with each blade. Each blade in turn has an airfoil portion and located proximate the base thereof is a collar having a planar surface which is adapted to engage the external planar surface of the hub. A plate member, which is separate from the remainder of the blade portion, has a planar surface which is adapted to engage the internal planar surface of the hub. Tie members, such as screws, are located on opposite sides of the airfoil portion and extend through aligned apertures in said collar and said plate member. By tightening these tie members, the plate member and collar are drawn toward each other, and the planar surfaces thereon engage associated planar surfaces of said hub to thereby securely clamp a portion of said hub therebetween. The foregoing construction in addition to being extremely simple and inexpensive, provides an extremely tight connection because of the relatively large bearing areas between the hub and the collar and between the plate and the hub. It can readily be appreciated that the above-mentioned planar surfaces, in addition to providing the above-described tight connection, also cause the entire structure to be economical from a fabrication aspect. Furthermore the above-mentioned threaded members can be manipulated from a position external to the hub to permit the pitch of the blade to be adjusted without a requirement for access to the internal portion of the hub. The various aspects of the present invention will more readily be perceived hereafter when

2

the following portions of the specification are read in conjunction with the accompanying drawings wherein:

FIG. 1 is a fragmentary rear elevational view of the improved fan construction of the present invention;

FIG. 2 is a view taken substantially along line 2—2 of FIG. 1;

FIG. 3 is a view taken substantially along line 3—3 of FIG. 2;

FIG. 4 is a view taken substantially along line 4—4 of FIG. 2;

FIG. 5 is a view taken substantially along line 5—5 of FIG. 3; and

FIG. 6 is a fragmentary elevational view of a modified form of hub construction which is manifestly suitable for use with the fastening arrangement of the present invention.

In FIGS. 1 and 2 a hub **10** is shown having a circumferential peripheral wall portion **11** secured to a web **12** which is in turn mounted on a tapered sleeve **13** by means of screws **14**, said tapered sleeve being attached to shaft **15** which is driven by a suitable motor, not shown.

The peripheral wall **11** of hub **10** has a plurality of circumferentially spaced apertures **16** therein. An internal planar surface **17** is located on an internal portion of wall **11** surrounding each of said apertures **16** and a planar surface **18** located on the external portion of said hub surrounding each of said apertures **16**. At this point it will be noted that the fastening construction will be described only with respect to a single blade **19** and that the fastening construction for other blades to be associated with other of said apertures **16** are identical.

Blade **19** includes an airfoil portion **20** having an outer tip **21** and a base portion **22**. It will be appreciated that the fan construction which includes a hub and a plurality of blades is adapted to rotate within cylindrical duct **23**. Located proximate the base portion **22** of airfoil portion **20** is a collar **24** which is, in this instance, formed integrally therewith and which is of generally cylindrical configuration so that it can fit snugly within counterbore **25** in hub portion **11**. The lower surface **26** of collar **24** is planar to provide good bearing contact with planar surface **18** of hub portion **11**. It is to be noted at this point that there is 360° contact between collar surface **26** and planar surface **18**, and this amount of contact stabilizes the blade in its mounted position.

A separate plate member **27** which is shown as being of solid rectangular configuration, but which may be of any other suitable configuration, is spacedly positioned relative to collar **24** so that a clearance exists therebetween. Plate **27** includes an upper planar surface **28**, a portion of which is adapted to engage planar surface **17** of hub portion **11** in firm bearing contact. It is to be noted that the simplicity of fabrication of the planar surfaces **18**, **26**, **28**, and **17** contributes greatly to the economy of the instant construction.

To complete the assembly, screws **29**, which are essentially tie members, extend between aligned apertures **30** and **31** (FIG. 5) in collar **24** and plate **27**. At this point it is to be noted that the ends **32** of screws **29** are threaded and are received in apertures **31** which are tapped. Devices are provided for preventing undesired turning of screws **29** after they are tightened, and in this instance a device **35** which is commercially known by the trademark "Heli-Coil" is used, this device being a helical coil of metallic material which fits between the threads at the ends of screws **32** and the tapped holes **31**. Mild steel can be used for plates **27** because the "Heli-Coil" construction strengthens the tapped holes against stripping. The "Heli-Coil" is of the type which serves the dual function of both strengthening the threads and locking the screws against undesired loosening. A "Heli-Coil" of this type is shown in Bulletin 800, page 1, dated 1962, of

the Heli-Coil Corporation, of Danbury, Connecticut. As can readily be seen from FIG. 5, screws **29** extend through circular aperture **16** in hub portion **11** to provide for unrestricted movement of said screws about the longitudinal axis of blade **19** incidental to the adjustment of pitch of the latter.

It will be noted that the heads of screws **29** are located within counterbores **33** in collar **24** and that said screw heads can be engaged by a hexagonal wrench and therefore be manipulated from a position external to hub **10** for the purpose of tightening and loosening blade **19**. More specifically, assuming that blade **19** is in a first position, in order to change its pitch it is merely necessary to loosen screws **29** from a location externally of hub **10**, manually adjust blade **19** while using the index marks of FIG. 3 as a reference, and thereafter retighten screws **29** to sandwich a portion of hub **11** surrounding the walls of aperture **16** between the planar surfaces **28** and **26** of plate **27** and collar **24**, respectively. Because there can be unlimited relative rotation between the blade and the hub on which it is mounted, it will be appreciated that the direction of air flow can be reversed without changing the direction of rotation of the fan by suitably adjusting the pitch of the blades.

In FIG. 6 a modified form of hub **10'** is shown. This hub does not have the polygonal internal peripheral surface of FIG. 1 but has a substantially circular internal peripheral surface **40**. Peripherally spaced on surface **40** are counterbores **41** for receiving plate **27** associated with each blade. It will be appreciated that by making the internal peripheral surface of hub **10'** circular rather than polygonal a single hub can be utilized for mounting different numbers of blades by merely varying the circumferential distance between counterbores **41**. In contrast to this, a hub such as **10** of FIG. 1 is limited to a given number of blades. More specifically, assuming that for a given application it is found that nine blades are an optimum number, the counterbores **40** will be spaced apart a distance of one-ninth of 360° and such spacing is effected on a standard hub **10'**, which under other circumstances can have the counterbores spaced different amounts, as required.

It is to be especailly noted that because all of the interengaging surfaces for securing the blade to the hub are planar and of relatively large area, the pitch of the blade can be adjusted and readjusted without mutilation of the joined elements, thereby insuring their longevity. Also, 360° contact between collar surface **26** and hub surface **18** provides for an extremely stable mounting of the blade. It will also be noted that the distribution of forces resulting from the foregoing construction permits the utilization of a thinner hub section than would otherwise be required with other fastening constructions. In addition, because planar parts are utilized to effect the above-described mounting of the blade on its associated hub, the fabrication of such parts and of the hub is relatively simple and inexpensive. Furthermore by locating the screws **29** on opposite sides of the airfoil, a balanced construction is obtained utilizing a plurality of screw members to further enhance the firm engagement between the associated parts. In short, the instant mounting construction provides an extremely simple and reliable arrangement for firmly mounting an axial fan blade on an associated hub while permitting pitch adjustment from the outside of said hub.

While a preferred embodiment of the present invention has been disclosed, it will readily be appreciated that it is not limited thereto, but may be otherwise embodied.

We claim:

1. A blade construction adapted to be mounted in firm clamped engagement on a portion of a hub having an internal peripheral wall portion and an external peripheral wall portion comprising a blade portion having a base, a hub having an internal and an external peripheral wall portion, said blade portion including a collar located proximate the base thereof, said collar having a first surface adapted to engage said external peripheral wall portion of said hub, a plate member having a second surface adapted to engage said internal peripheral wall portion of said hub, said blade portion and said plate having a clearance therebetween in their mounted position, aperture means in said hub, tie means on opposite sides of said blade portion extending through said aperture means and between said collar and said plate member for drawing said collar and said plate member toward each other until said collar and said plate member mount said blade construction against movement on said hub by sandwiching a portion of said hub in firm clamped engagement between said first and second surfaces, means forming a part of said tie means and located proximate said peripheral external surface for effecting loosening and tightening of said tie means from a position external to said hub, said loosening of said tie means permitting adjustment of said blade construction on said hub by increasing the clearance between said plate member and said collar and thereby permitting movement of said blade construction on said hub, and means associated with said tie means for locking said tie means against undesired loosening after said tie means have been tightened.

2. An axial fan for mounting a plurality of individually adjustable blades in rigid clamping engagement on an associated hub comprising a hub having a wall with a plurality of opposed outer and inner planar portions circumferentially located along the periphery of said hub, circumferentially spaced apertures in said wall extending from each of said outer planar portions to each of said inner planar portions; a plurality of blades, each of said blades having an airfoil portion and a collar located proximate the base of said airfoil portion, a first and second aperture in each of said collars on opposite sides of said airfoil portions, each of said collars having a planar surface adapted to engage an associated outer planar wall portion, a plate member spacedly located from each of said collars, a clearance between associated plate members and said blades, each of said plate members having third and fourth apertures therein, said third apertures being in alignment with said first apertures and said fourth apertures being in alignment with said second apertures, each of said plate members having a planar surface for engaging an associated internal planar portion of said hub, first threaded means extending through each of said first and third apertures and second threaded means extending through each of said second and fourth apertures for drawing each of said plate members and said collars toward each other to thereby effect said rigid clamping engagement on said associated hub in view of said clearance between said plate members and said blades, and means for permitting the manipulation of each of said first and second threaded means from a position proximate said external portions of said hub to thereby effect the loosening and tightening of said threaded means for varying the clearance between each of said blades and each of said plate members to thereby permit the loosening of each of said blades by increasing of said clearance for purposes of adjustment from a position external to the hub and for permitting the tightening of each of said blades by causing said plate members to approach said collars by decreasing of said clearance in response to the tightening of said first and second threaded means to thereby cause said planar surface of each of said collars to firmly engage associated external planar surfaces of said hub and to cause each of said planar surfaces of said plate members to firmly engage associated internal planar surfaces of said hub to thereby sandwich portions of said hub in rigid clamping engagement between said collars and said plate members to thereby securely fasten said blades against movement on said hub after said first and second threaded means have been tightened, and means associated with said threaded means for locking said threaded means

against undesired loosening after said threaded means have been tightened.

References Cited by the Examiner

UNITED STATES PATENTS

945,237	1/1910	Howden	170—173
1,878,816	9/1932	Bucklen	170—160.6
2,101,535	12/1937	Engdahl	170—160.6
2,501,908	3/1950	Nichols	170—160.22
2,812,028	11/1957	Halvorsen	170—160.58

2,981,338	4/1961	Hindmarch	170—160.6
3,013,615	12/1961	Pehrsson	170—160.58

FOREIGN PATENTS

1,241,555	8/1960	France.
367,265	2/1932	Great Britain.
562,711	7/1944	Great Britain.

SAMUEL LEVINE, *Primary Examiner.*

JULIUS E. WEST, *Examiner.*