Jan. 30, 1968 A. R. BROTHERS 3,366,123

DEVICE FOR REMOVAL OF DELETERIOUS SUBSTANCES FROM TOBACCO SMOKE

Filed Oct. 23, 1965

FIG. 1

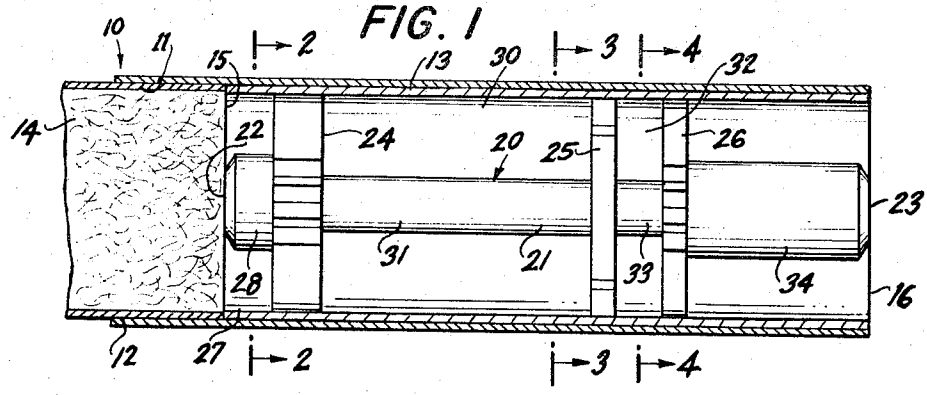

FIG. 2

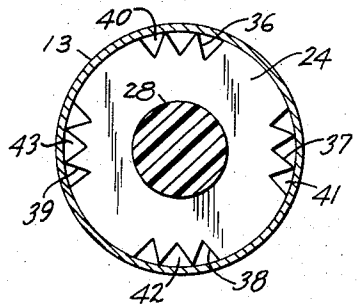

FIG. 3

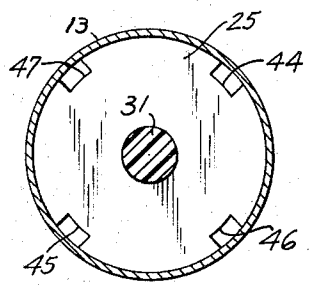

FIG. 4

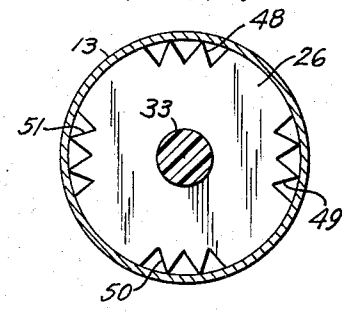

FIG. 2a

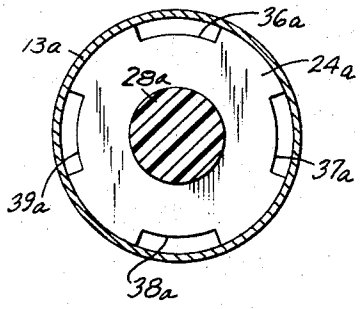

FIG. 3a

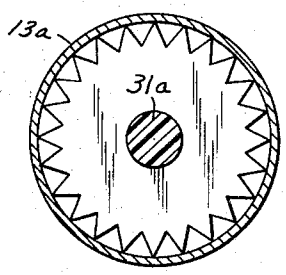

FIG. 4a

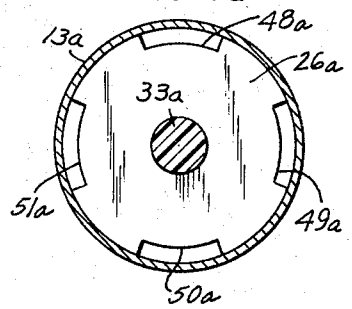

FIG. 5

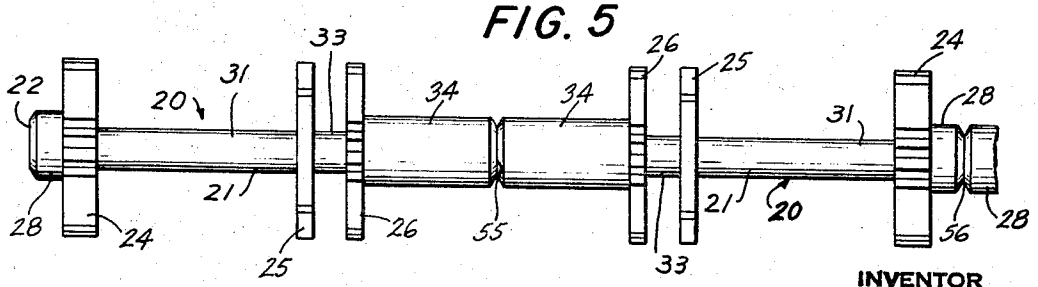

INVENTOR
ABE R. BROTHERS
BY Percy Freeman
ATTORNEY

United States Patent Office 3,366,123
Patented Jan. 30, 1968

3,366,123

DEVICE FOR REMOVAL OF DELETERIOUS SUBSTANCES FROM TOBACCO SMOKE

Abe R. Brothers, 3215 Avenue H,
Brooklyn, N.Y. 11210

Filed Oct. 23, 1965, Ser. No. 503,596
18 Claims. (Cl. 131—10.5)

This invention relates generally to cigarette construction, and is particularly concerned with the provision of a unique and highly improved device in a cigarette for effectively removing tars, resins, nicotine, dust and other deleterious substances from tobacco smoke. It is an improvement over my invention as disclosed in my Patent No. 2,764,513, dated Sept. 25, 1956.

It is an important object of the present invention to provide in a cigarette construction, a device which is capable of being conveniently and inexpensively incorporated in cigarettes during manufacture thereof, and which effectively removes tars, resins, nicotine, dust and other deleterious materials from the tobacco smoke before entering the smoker's mouth, and without detracting from the taste, feel and draw of the cigarette.

It is still a further object of the present invention to provide, in a cigarette construction, an insert having the advantageous characteristics mentioned in the preceding paragraph, which is extremely simple in structure, foolproof in operation, and relatively inexpensive so as to economically justify discard with the cigarette.

Other objects of the present invention will become apparent upon reading the following specification and referring to the accompanying drawings, which form a material part of this disclosure.

The invention accordingly consists in the features of construction, combinations of elements, and arrangements of parts, which will be exemplified in the construction hereinafter described, and of which the scope will be indicated by the appended claims.

In the drawings:

FIGURE 1 is a partial longitudinal sectional view of a cigarette constructed in accordance with the teachings of the present invention.

FIGURE 2 is a transverse sectional view taken generally along the line 2—2 of FIGURE 1.

FIGURE 2*a* is a sectional view similar to FIGURE 2, but showing a modification.

FIGURE 3 is a transverse sectional view taken generally along the line 3—3 of FIGURE 1.

FIGURE 3*a* is a sectional view similar to FIGURE 2, but showing a modified embodiment.

FIGURE 4 is a transverse sectional view taken generally along the line 4—4 of FIGURE 1.

FIGURE 4*a* is a sectional view similar to FIGURE 4 but showing a modified embodiment.

FIGURE 5 is a longitudinal view showing a convenient method of manufacturing an insert according to the teachings of the present invention.

Referring now more particularly to the drawings and specifically to FIGURES 1–4 thereof, a cigarette is generally designated **10**, and includes a cigarette paper or other suitable external wrapper **11** over the tobacco **14**. A tubular, generally cylindrical insert cover tube **13** is conformably joined to the cigarette **10** by cork or other conventional tipping **12**. The tipping **12** covers a small portion of the cigarette **10** and the entire length of cover tube **13**, said cover tube being self-sustaining.

The cover tube **13** may be fabricated of cardboard, or other suitable material. Snugly fitting interiorly of the cover tube **13** is an insert or device, generally designated **20**. The insert device **20** includes an elongate shank **21** extending coaxially within the cover tube **13** having one end **22** adjacent to and in holding engagement with the

tobacco end **15**. The other shank end **23** is adjacent to the tipping or cover tube end **16**. The shank **21** may be of generally circular cross section, or otherwise, if desired.

At spaced locations along the shank **21**, there are carried by the shank a plurality of at least three circular enlargements or discs **24**, **25** and **26**. The discs **24**, **25** and **26** are in parallel spaced relation with respect to each other, coaxial with the shank **21**, and have their peripheral edges engaging the interior surface of the cover tube **13**. It will be observed that the enlargement or disc **24** is located adjacent to and spaced from the tobacco end **15**, combining with the latter and the adjacent encompassing portion of cover tube **13** to define therebetween a smoke passage and smoke-accumulation space or chamber **27** surrounding the shank portion **28** extending from the disc **24** to shank end **22**. Shank **28** also serves to keep the tobacco particles in position.

The remaining pair of enlargements or discs **25** and **26** are located in adjacent, closely spaced relation with respect to each other, and are remotely spaced from the disc **24**. As is apparent in FIGURE 1, the disc **26** is closest to the cover tube end **16**, while the disc **25** is closest to the disc **24**, although widely spaced from the latter disc. Thus, a relatively large space or chamber **30** is defined between the discs **24** and **25** encompassed by the intermediate portion of cover tube **13** and surrounding the shank portion **31** intermediate the discs **24** and **25**. The chamber **30** thus defined provides a cooling chamber, as will appear more fully hereinafter. It will be noted that the shank portion **31** extending between discs **24** and **25** is of reduced diameter, as compared to the shank portion **28**.

The space **32** defined between the closely spaced discs **25** and **26** and surrounding portions of cover tube **13** provides an impingement chamber, also described more fully hereinafter. The shank portion **33** extending between discs **25** and **26** is also of reduced diameter, similar to the shank portion **31**. The remaining shank portion **34** extending from the disc **26** to shank end **23** may be relatively enlarged, similar to the shank end portion **28**.

The several enlargements or discs **24** and **26** are each provided on its peripheral edge with cutouts, illustrated in the preferred embodiment as serrations, but capable of assuming various configurations. In particular, the peripheral edge of disc **24** may be provided at circumferentially spaced locations thereabout with several series of serrations or cutouts **36**, **37**, **38** and **39**. In the illustrated embodiment, the separate groups of serrations are angularly spaced about 90 degrees apart, and the serrations extend widthwise entirely across the peripheral edge of the disc. However, if desired, the serrations may be continued uninterruptedly around the periphery of the disc. The serrations **36–39** combine with the adjacent portions of cover tube **13** to define cool area openings or passageways, as at **40**, **41**, **42** and **43** each communicating between the chambers **27** and **30** on opposite sides of the disc **24** for the purposes of precluding tobacco particles from passing through, and also to cool the smoke passing therethrough.

The disc **25** is formed on its peripheral edge with a plurality of restricted openings **44**, **45**, **46** and **47**, the aggregate cross-sectional area of which is equivalent to a circle of the order of .015" to .070" diameter, wherein the restricted openings are widthwise entirely across the edge of the disc to define respective passageways or openings communicating between chambers **30** and **32** on opposite sides of the disc **25**. As is apparent in FIGURES 2 and 3, the restricted openings **44** to **47** are angularly spaced from the serrations or cutouts **36**, **37**, **38** and **39**, so as to be out of alignment with the latter cutouts longitudinally of the cover tube **13**.

The disc **26** is also similarly formed at spaced locations on its peripheral edge with groups of cutouts or serrations, as at **48** to **51**. The cutouts or serrations **48**, **49**, **50** and **51** extend entirely across the peripheral edge of disc **26** and combine with the adjacent portions of cover tube **13** to define through openings or passageways communicating between the chamber **32** and the other side of disc **26** which opens through to the cover end **16**. It will also be observed that the groups of serrations **48** to **51** are located in angularly spaced relation with respect to the restricted openings of the disc **25**, so as to be offset from the latter openings longitudinally of the cover tube **13**.

While the serrations or cutouts of the dics **24** and **26** may assume other configurations, as noted above, the toothed, scalloped or pinked configuration is desirable in affording support to the adjacent portions of cover tube **13**.

The device or insert **20** may be molded and/or formed from any suitable thermoplastic or other suitable material; all shanks and enlargements are integral of said device or insert.

In operation, when smoke is not being drawn through the cigarette, there will be an accumulation of smoke in chamber **27**, and upon smoke being drawn through the cigarette the smoke will pass relatively rapidly through the openings **40**, **41**, **42** and **43**. This rapid passageway through the openings, and the location of the openings at the outer extremity of the disc adjacent to the cover tube **13** effects substantial cooling of the smoke. By reason of the relatively large size of the cooling chamber **30**, further considerable cooling is effected. This is a prerequisite, in addition to velocity, for the maximum impingement results.

Drawing of smoke through the cigarette effects relatively rapid velocity of the cooled smoke through the restricted openings **44** to **47** of disc **25**, so that the smoke impinges with rapid velocity, upon the closely spaced next-adjacent disc **26** at locations out of alignment with the openings **48** to **51** of the latter disc. This results in a substantial removal of liquids and solids which are deposited on the surface of disc **26** facing disc **25**, and the relatively clean smoke may then pass through the openings **48** to **51** of disc **26** to the smoker's mouth through the circumferential recesses surrounding shank portion **34**.

Economy and convenience in manufacture of the insert **20** has been found by utilization of the molded form **55** shown in FIGURE 5. By this means, a relatively long molded form **55** may be produced, wherein a series of sections **20**, each corresponding to the insert **20** described hereinbefore, are detachably connected together in opposed, end-to-end relationship. Thus, a pair of adjacent molded sections **20** may have their shank portions **34** connected together in end-to-end relation by a reduced, frangible portion **55**. Separation of adjacent insert sections **20** is readily achieved by fracture or cutting of the frangible portion **55**. Similarly, the opposite end portions **28** are connected together in adjacent end-to-end relationship by a reduced, frangible portion **56**, and separated by fracture or cutting of the frangible portion.

In the embodiment of FIGURES 2*a* and 4*a*, there are shown discs **24***a* and **26***a* corresponding to previously described discs **24** and **26**. However, the peripheral cutouts of discs **24***a* and **26***a* may assume slot or groove formations, rather than the serrated or toothed formations first described. Thus, disc **24***a* is formed with a plurality of circumferentially spaced slots or grooves **36***a*, **37***a*, **38***a* and **39***a*, each extending entirely across the peripheral edge of the disc **24***a*. The disc **26***a* is similarly formed with a plurality of circumferentially spaced cutouts in the nature of slots or grooves **48***a* to **51***a* extending entirely across the peripheral edge of the disc. The edge slots or grooves of discs **24***a* and **26***a* are preferably out of alignment with the cutouts of disc **25** longitudinally of the cover tube **13**, in the same manner as the first-described embodiment.

From the foregoing, it is seen that the present invention provides a cigarette construction for removal of deleterious materials from tobacco smoke which fully accomplishes its intended objects and is well adapted to meet practical conditions of manufacture and use.

Although the present invention has been described in some detail by way of illustration and example for purposes of clarity of understanding, as applied to a cigarette, obviously the invention may be used effectively with any other tobacco-smoking article, as for instance with cigars, pipes, holders, mouthpieces and bits, and it is understood that certain changes and modifications may be made within the spirit of the invention and scope of the appended claims.

I claim:

1. In combination with a cigarette having a tobacco area, a self-sustaining cylindrical cover tube, the interior part of said cover tube containing a snugly fit device for removing tar and other deleterious substances from tobacco smoke, said device comprising an elongate shank disposed coaxially within said cover tube extending from the tobacco to the other end of said cover tube, and at least three parallel spaced generally circular enlargements defining a first disc nearest the tobacco, a second disc and a third disc, all carried coaxially on said shank and in peripheral engagement with the interior of said cover tube, said discs having edge cutouts defining openings between said cover tube and discs and each opening communicating between opposite sides of the respective discs, cutouts of each disc being circumferentially spaced from the cutouts of the adjacent discs to offset the openings out of alignment with each other longitudinally of the cover tube.

2. The combination set forth in claim **1**, wherein said openings of the first and third discs are of small enough magnitude to prevent tobacco particles passing therethrough while permitting free flow of smoke therethrough and also for providing a cooling area, and the cross-sectional area of the combined openings of each said first and third discs being substantially greater than the cross-sectional area of the combined openings in the second disc.

3. The combination according to claim **1**, wherein said first and second discs are relatively widely spaced to define therebetween a smoke cooling chamber.

4. The combination according to claim **1**, wherein said second and third discs are relatively closely spaced to define therebetween a rapid velocity smoke-impingement chamber.

5. The combination according to claim **1**, wherein said first and third discs are spaced from opposite ends of said shank, to define a smoke accumulating chamber between said tobacco and said first disc and a space between said third disc and the end of said shank remote from said tobacco.

6. The combination according to claim **1**, wherein the combined cross-sectional area of the plurality of openings of the second disc is equivalent to the area of a circle of the order of .015 inch to .070 inch diameter.

7. The combination according to claim **1**, wherein said first and second discs are relatively widely spaced to define therebetween a smoke-cooling chamber, and the second and third discs are relatively closely spaced to define therebetween a rapid velocity smoke-impingement chamber.

8. The combination according to claim **7**, said shank being of reduced diameter in each of said cooling and impingement chambers.

9. The combination set forth in claim **1**, wherein the cutouts on said first and third discs are angularly spaced shallow arcuate slots, one wall of which is the inner surface of said cover tube.

10. An insert for a cigarette and oher tobacco-smoking articles for removing tar and other deleterious substances

from tobacco smoke comprising a self-sustaining cylindrical cover tube, an elongate shank snugly disposed coaxially within said cover tube, at least three parallel spaced discs defining a first, a second and a third disc carried by said shank coaxially thereof, said first and second discs being relatively widely spaced, said second and third discs being relatively closely spaced, and all said discs each being formed with peripheral edge cutous extending between opposite faces thereof, the cutouts of each disc being out of alignment longitudinally of said shank with the cutouts of the next adjacent disc.

11. The comibnation set forth in claim **10**, wherein said first and second discs are relatively widely spaced to define therebetween a smoke cooling chamber.

12. The combination set forth in claim **10**, wherein said second and third discs are relatively closely spaced to define therebetween a rapid velocity smoke-impingement chamber.

13. The combination set forth in claim **10**, wherein said first and third discs are spaced from opposite ends of said shank, to define a smoke-accumulating chamber between said tobacco and said first disc and a space between said third disc and the end of said shank remote from said tobacco.

14. The combination set forth in claim **10**, wherein the combined cross-sectional area of the plurality of openings of the second disc is equivalent to the area of a circle of the order of .015 inch to .070 inch diameter.

15. The combination set forth in claim **10**, wherein said first and second discs are relatively widely spaced to define therebetween a smoke-cooling chamber, and the second and third discs are relatively closely spaced to define therebetween a rapid velocity smoke-impingement chamber.

16. The combination set forth in claim **10**, wherein said shank is of reduced diameter in each of said cooling and impingement chambers.

17. An insert for a cigarette and other tobacco-smoking articles for removing tar and other deleterious substances from tobacco smoke comprising an elongate shank, at least three parallel spaced discs defining a first, a second and a third disc carried by said shank coaxially thereof, said first and second discs being relatively widely spaced, said second and third discs being relatively closely spaced, and all said discs each being formed with peripheral edge cutouts extending between opposite faces thereof, the cutouts of said first disc being substantially uniform and continuous around the periphery thereof.

18. In combination with a cigarette, a self-sustaining cylindrical cover tube, the interior part of said cover tube containing a snugly fit device for removing tar and other deleterious substances from tobacco smoke, said device comprising an elongate shank disposed coaxially within said cover tube extending from the tobacco to the other end of said cover tube, and at least three parallel spaced generally circular enlargements defining a first disc nearest the tobacco, a second disc and a third disc, all carried coaxially on said shank and in peripheral engagement with the interior of said cover tube, said discs having edge cutouts defining openings between said cover tube and discs and each opening communicating between opposite sides of the respective discs, the cutouts of said first disc being substantially uniform and continuous around the periphery thereof, and the cutouts of the second disc being circumferentially spaced from the cutouts of the third disc to offset the respective openings out of alignment with each other longitudinally of the cover tube.

References Cited

UNITED STATES PATENTS

3,167,076	1/1965	Maré	131—10.5
3,330,284	7/1967	Seman et al.	131—10.5

FOREIGN PATENTS

827,884	1/1952	Germany.
155,189	12/1920	Great Britain.

LUCIE H. LAUDENSLAGER, *Primary Examiner.*