662218

The Commissioner of Patents
PO Box 200
WODEN ACT 2606

AUSTRALIAN PATENT OFFICE SEC. 104

F B RICE & CO
SYDNEY NSW
Speed Dial 511

AUSTRALIA
Patents Act 1990

PATENT REQUEST: STANDARD PATENT

We, ESSELTE DYMO N.V., being the person(s) identified below as the Applicant, request the grant of a standard patent to the person identified below as the Nominated Person, for an invention described in the accompanying complete specification.

Full application details follow.

Applicant:	ESSELTE DYMO N.V.
Address:	Industriepark-Noord 30, PO Box 85, B-2700 St Niklaas, Belgium
Nominated Person:	ESSELTE DYMO N.V.
Address:	Industriepark-Noord 30, PO Box 85, B-2700 St Niklaas, Belgium
Invention Title:	"Tape Cutting Apparatus"
Name(s) of Actual Inventor(s):	Ian COLLINS; Robert Charles Lewis DAY; Alan ~~Richard~~ COOPER; Erik OPGENHAFFEN and Geert HEYSE
Address for service is:	F.B. RICE & CO., 28A Montague St, Balmain N.S.W. 2041
Attorney Code:	RI

BASIC CONVENTION APPLICATION(S) DETAILS

Application No	Country	Country Code	Date of Application
9208533.1	Great Britain	GB	21 April 1992

Applicant(s): Esselte Dymo N.V.

We are not an eligible person described in Section 33 - 36 of the Act.

Drawing number recommended to accompany the abstract Figure 1

Dated this 28 day of January 1994

ESSELTE DYMO N.V.

By: _____
Registered Patent Attorney

59990/TJD/ns65a

AUSTRALIA
Patents Act 1990

P/00/008
Section 29(1)
Regulation 3.1(2)

NOTICE OF ENTITLEMENT

(To be filed before acceptance)

I, F.L. SCHILLING, being authorised by ESSELTE DYMO NV of Industriepark-Noord 30, PO Box 85, B-2700 St Niklaas, Belgium, the applicant in respect of an application for a patent for an invention entitled "Tape Cutting Apparatus" filed under Australian Application No 37023/93 state the following:-

The person(s) nominated for the grant of the patent has, for the following reasons, gained entitlement from the actual inventor(s):

The nominated person is the assignee of an interest in the invention from inventors Alan Cooper, Ian Collins and Robert Charles Lewis Day via mesne assignment and is entitled to the remaining interest in the invention from Erik Opgenhaffen and Geert Heyse by contracts of employment.

The person(s) nominated for the grant of the patent are the applicant(s) of the basic application(s) listed on the Patent Request Form.

The basic application(s) listed on the Patent Request Form is the first application(s) made in a convention country in respect of the invention.

Signed: _____ Date: 21 March 1995

Status: Patent Attorney

F.B. RICE & CO. PATENT ATTORNEYS

59990/FLS/awc81

AU9337023

(12) PATENT ABRIDGMENT (11) Document No. AU-B-37023/93
(19) AUSTRALIAN PATENT OFFICE (10) Acceptance No. 662218

(54) Title
TAPE CUTTING APPARATUS

International Patent Classification(s)
(51)[5] **B65H 035/06**

(21) Application No. : **37023/93** (22) Application Date : **20.04.93**

(30) Priority Data

(31) Number	(32) Date	(33) Country
9208533	**21.04.92**	**GB UNITED KINGDOM**

(43) Publication Date : **28.10.93**

(44) Publication Date of Accepted Application : **24.08.95**

(71) Applicant(s)
ESSELTE DYMO N.V.

(72) Inventor(s)
IAN COLLINS; GEERT HEYSE; ERIK OPGENHAFFEN; ALAN COOPER; ROBERT CHARLES LEWIS DAY

(74) Attorney or Agent
F B RICE & CO , 28A Montague Street, BALMAIN NSW 2041

(56) Prior Art Documents
US 5066152
GB 2008028

(57) Claim

1. A tape cutting apparatus for cutting off a portion of tape supplied thereto comprising first and second layers secured one to another by an adhesive layer, the first layer of said tape being formed of a material having a resilience greater than that of the second layer, the apparatus comprising:

a cutter support member carrying a blade and having a tape holding surface located to hold ~~for holding~~ said tape during cutting;

a tape support surface which supports the tape during cutting at both sides of a ~~said~~ cutting location with the second layer of the tape adjacent said tape support surface;

means for bringing the blade into contact with the tape at said cutting location during a cutting step in which the tape is held at both sides of said cutting location, the apparatus further comprising a tape bending surface over which the tape is bent during said cutting step such that when the tape is released the first and second layers tend to separate from one another at the cut edge.

662218

AUSTRALIA

Patents Act 1990

ESSELTE DYMO N.V.

ORIGINAL
COMPLETE SPECIFICATION
STANDARD PATENT

Invention Title:

"Tape cutting apparatus"

The following statement is a full description of this invention including the best method of performing it known to us:-

TAPE CUTTING APPARATUS

The present invention relates to tape cutting apparatus and is particularly but not exclusively concerned with cutting tape used in thermal printing devices.

Thermal printing devices of the type with which the present invention is primarily concerned operate with a supply of tape arranged to receive an image and a means for transferring image onto the tape. In one form, a tape holding case holds a supply of image receiving tape and a supply of an image transfer ribbon, the image receiving tape and the transfer ribbon being passed in overlap through a printing zone of the printing device. A printing device operating with a tape holding case of this type is described for example in EP-A-0267890 (Varitronics, Inc.). Other printing devices have been made in which letters are transferred to an image receiving tape by a dry lettering or dry film impression process. In all of these printing devices, the construction of the image receiving tape is substantially the same. That is, it comprises an upper layer for receiving an image which is secured to a releaseable backing layer by a layer of adhesive. Once an image or message has been printed on the tape, it is desired to cut off that portion of the tape to enable it to be used as a label. For this purpose, it is necessary to remove the releaseable backing layer from the upper layer to enable the upper layer to be secured to a surface by means of the adhesive layer. With existing printing devices, it is difficult to remove the releaseable backing layer from the upper layer: it is necessary first to separate the closely adhered end portions of the releaseable backing layer and the upper layer, for example using a fingernail or tweezers so that the separated end portion of the releaseable backing layer can be finger gripped to peel it off the adhesive layer. This is a relatively difficult procedure and furthermore can result in the ends of the label being damaged in the process.

There have been several attempts to solve this problem. Most such attempts have sought to rely on the provision of a so-called tab cut. In these devices, a first cut is made completely through all the layers of the tape to cut off a portion of the tape and at the same time a cut is made through only one layer of the tape. This provides a "tab" which, in theory, can be peeled away reasonably easily. While a tab cut has been implemented successfully with relatively thick, stiff upper layers there are significant difficulties in implementing so-called tab cut devices for tapes of the type used in thermal printing devices, where the upper layer is generally a thin, resilient polyester material. Although there have been several proposals, no such tab cut has successfully been implemented in a thermal printing device. By way of example, reference is made to EP-A-0319209 which describes one attempt to form a tab cut system.

The present invention provides a different solution to the problem of enabling the releaseable backing sheet to be removed easily, by providing a cutting system which causes the end portions of the tape to separate as a result of the cutting operation.

~~According to the present invention there is provided a tape~~ cutting apparatus for cutting off a portion of tape comprising first and second layers secured one to another by an adhesive layer, the apparatus comprising a cutter support member carrying a blade and being mounted for movement relative to a tape support location where the tape is supported to bring the blade into contact with the tape, there being provided a tape bending surface over which the tape is bent such that when the tape is released the first and second layers tend to separate from one another at or adjacent the cut edge.

In one embodiment, tape is supported by an anvil having a stepped portion over which the tape is bent and a facing ~~surface against which the tape rests during cutting. The~~

AUSTRALIA PATENT OFFICE

According to the present invention there is provided a tape cutting apparatus for cutting off a portion of tape supplied thereto comprising first and second layers secured one to another by an adhesive layer, the first layer of said tape being formed of a material having a resilience greater than that of the second layer, the apparatus comprising:

a cutter support member carrying a blade and having a tape holding surface located to hold said tape during cutting; a tape support surface which supports the tape during cutting at both sides of a cutting location with the second layer of the tape adjacent said tape support surface;

means for bringing the blade into contact with the tape at said cutting location during a cutting step in which the tape is held at both sides of said cutting location, the apparatus further comprising a tape bending surface over which the tape is bent during said cutting step such that when the tape is released the first and second layers tend to separate from one another at the cut edge.

In another aspect the present invention provides a tape cutting apparatus for cutting off a portion of tape comprising first and second layers secured one to another by an adhesive layer, the apparatus comprising:

a cutter support member carrying a blade and being mounted for movement, during a cutting step, relative to a tape support location where the tape is supported to bring the blade into contact with the tape;

an anvil having a facing surface which provides at the tape support location a tape support surface on which the tape is supported during cutting, said tape support surface having a stepped portion over which the tape passes, said anvil further comprising an angled portion over which the tape extends before being bent over said

AUSTRALIA PATENT OFFICE

stepped portion during said cutting step.

In yet another aspect the present invention provides a tape cutting apparatus for cutting off a portion of tape comprising first and second layers secured one to another by an adhesive layer, the apparatus comprising a cutter support member carrying a blade and being mounted for movement, during a cutting step, relative to a tape support location where the tape is supported to bring the blade into contact with the tape, the apparatus further comprising a tape bending surface over which the tape is bent during said cutting step such that when the tape is released the first and second layers tend to separate from one another at the cut edge, wherein the lower surface of the cutter support member comprises an angled surface portion facing said tape support location.

In a still further aspect the present invention provides a tape cutting apparatus for cutting off a portion of tape comprising first and second layers secured one to another by an adhesive layer, the apparatus comprising a cutter support member carrying a blade and being mounted for movement, during a cutting step, relative to a tape support location where the tape is supported to bring the blade into contact with the tape, the apparatus further comprising a tape bending surface over which the tape is bent during said cutting step such that when the tape is released the first and second layers tend to separate from one another at the cut edge, wherein the tape bending surface is located downstream of a cutting location where the tape is cut, relative to the direction of movement of the tape.

In one embodiment, tape is supported by an anvil having a stepped portion over which the tape is bent and a facing surface against which the tape rests during cutting. The

AUSTRALIA PATENT OFFICE

blade then acts against the anvil for cutting, while the tape is bent over the stepped portion.

This type of cutting apparatus provides a separation between the first and second layers of the tape at the leading edge of the next portion to be cut. Thus, the releaseable backing layer can easily be peeled away from the upper layer. The invention is particularly applicable to cut tapes in which the first layer of said tape is formed of a material having a resilience greater than that of the second layer, wherein the second layer lies against the facing surface of the anvil during cutting.

The invention also contemplates apparatus capable of providing separation between the layers of tape at the trailing edge of the label which has been cut. In this arrangement, the tape is supported at a cutting location adjacent which is the tape bending surface. The apparatus includes a tape bending member which is movable relative to the tape bending surface to cause the tape to bend over the tape bending surface. The arrangement can be such that the tape bending surface is actuated to bend the trailing region of the tape portion to be cut before cutting takes place.

For a better understanding of the present invention and to show how the same may be carried into effect, reference will now be made, by way of example, to the accompanying drawings, in which:

Figure 1 is a diagrammatic plan view of a tape cassette shown in cooperation with a printing and feed mechanism and a tape cutting apparatus;

Figure 2 shows the tape cutting apparatus in a tape print/feed position;

Figure 3 shows the tape cutting apparatus in a cutting position;

Figure 4 shows the tape cutting apparatus in a cut and peel position;

Figure 5 shows another embodiment of a tape cutting apparatus;

Figures 6a to 6c show the embodiment of Figure 5 during operation; and

Figures 7a and 7b show a further embodiment in operation.

In Figure 1, reference numeral 1 designates a tape holding case or cassette. The tape holding case contains a supply spool 2 of an image receiving tape 4. The image receiving tape comprises an upper layer which receives a printed image. The upper layer can for example be polyester or paper. The underside of the upper layer is coated with an adhesive layer to which is secured a releaseable backing layer. The construction of the image receiving tape 4 is described in more detail hereinafter with reference to the tape cutting apparatus.

The cassette 1 also houses an image transfer ribbon 6. The ribbon 6 extends from a supply spool 8 to a take-up spool 10. The take-up spool 10 is driven as indicated by arrow 10A in a direction to cause the ribbon 6 to be fed from the supply spool 8 to the take-up spool 10 via a print zone generally designated 12. The image receiving tape 4 is also guided through the print zone 12 overlapped with the transfer ribbon 6. Reference numerals 14 and 16 denote guide posts for guiding the image receiving tape 4 through the cassette 1. The cassette 1 also houses a feed roller 18.

The cassette 1 is intended to cooperate with a thermal printing device. The printing device carries a print head 20 and a platen 22. The print head is movable between an operative position shown in Figure 1 in which it is in contact with the platen 22 and in which the image receiving tape and transfer ribbon are pinched in overlap between the print head and the platen and an inoperative position in which the tapes are released to enable the cassette to be removed. With the print head in contact with the platen, an image is transferred to the image receiving tape as a result of selectively heating pixels on the thermal print head. Such thermal printing devices are know, one example being illustrated in EP-A-0267890. The printing device also carries a drive roller 24 which cooperates with the feed roller 18 in the cassette 1 to draw the image receiving tape once printed past the print zone and out of the cassette 1. Once a message has been printed, the image receiving tape is fed out of the cassette to a cutting apparatus 26.

Figure 2 shows the cutting apparatus 26 in the position as the image receiving tape is fed out of the cassette 1. As explained above, the image receiving tape 4 comprises an upper layer 4a, an adhesive layer 4b and a releaseable backing layer 4c.

The cutting apparatus 26 comprises a cutter support 28 carrying a blade 30. The blade 30 extends past the lower surface 29 of the cutter support means. The lower surface 29 of the cutter support 28 has a portion 32 which extends at an angle from one of the side walls 31 thereof to an intermediate portion of the lower surface 29.

A tape guide 34 is provided by a flexible element extending downwardly from the cutter support 28 along that side wall. In the described embodiment, the cutter support 28 is fixedly mounted to a printing device.

The tape cutting apparatus 26 further comprises an anvil 36 which is pivotably mounted about a shaft 38 secured to the printing device. The anvil 36 is movable towards and away from the cutter support 28. The upper surface of the anvil 36 has a stepped portion 40 and an angled portion 42. The angled portion 42 extends at an angle which is approximately the same as the angle of the lower surface portion 32 of the cutter support 28.

The angled portion 42 of the anvil and the tape guide cooperate to cut as a funnel to guide tape into the cutting apparatus on insertion of a new cassette. A cutting operation will now be described with reference to Figure 3. In order to cut off a portion of the tape, the anvil 36 is pivoted about the shaft 38 so as to move upwardly to bring its upper surface into contact with the blade 30. This forces the stepped portion 40 against the releaseable layer 4c of the tape 4 and causes the tape guide 34 to bend against the angled surface portion 32 of the cutter support 28. The blade 30 acts against the upper surface of the anvil 36 to cut off a portion of the tape, this portion being to the left hand side of Figure 3. The anvil 36 is then moved away from the blade 30 in the downwards direction to adopt the position shown in Figure 4. As can be clearly seen in Figure 4, the cutting operation which has just been executed has caused the image receiving tape 4 to be bent over the stepped portion 40 of the anvil 36. When the image receiving tape is bent in this way, the upper layer 4a is bent resiliently but not permanently deformed due both to its material properties and because the radius of the bend is greater than that undergone by the releaseable layer 4c. On the other hand, the releaseable layer 4c is permanently deformed by the bending action over the stepped portion both because of its material properties and the smaller bend radius. When the cutter apparatus is released, the natural tendency of the material forming the upper layer 4a is to straighten. However, the releaseable layer 4c remains bent and this creates a force between the two

layers greater than that which the adhesive can withstand. As a result of this, the end portions of the tape to the left of the blade 30 separate following each cutting operation. The separated layers constitute a lead portion of the next part of the tape which, once printed, will be cut in the same way as described above with reference to Figure 3. The label thus formed therefore has at its lead end a portion 44 which can be gripped by a user to enable the releaseable backing layer 4c easily to be pulled away from the upper layer to enable the label to be secured to a surface.

In this way, labels are formed which have a so-called easy-peel feature enabling the backing layer to be removed in a simple manner. The tape cutting apparatus described herein is suitable for any thermal printing device which utilises an image receiving tape having the construction described herein, or an equivalent construction. In particular, it will be appreciated that the invention applies to the cutting of any tape where there are two layers secured by an adhesive, and that each layer can include more than one sub-layer. For example the tape cut in EP 0319209 has an upper layer comprising a clear tape secured to a carrier layer by adhesive, the upper layer having secured to the other side of the carrier a releaseable backing layer. Thus, the releaseable backing layer could be separated from the upper layer using the present invention.

Figure 5 shows an alternative cutting arrangement, which provides a so-called "peel-cut" adjacent the trailing end of a portion of tape. The cutting arrangement comprises a cutter support member 102 carrying a blade 104 and a tape bending member 106. The cutter support member 102 is mounted for sliding movement within a slot 112 in the tape bending member. The broken line in Figure 5 denotes the casing 107 of a printer or other support for the cutting arrangement. Reference numeral 108 denotes a surface for supporting a tape to be cut. The tape support surface 108 has a stepped portion

124 which cooperates with a step 126 provided in the tape bending member 106 in a manner which will be described more clearly hereinafter. In Figure 5, tape will exit from the printing device from the left to the right, as indicated by arrow A. A relatively weak spring 114 is located between a ledge 116 of the tape bending member and a cooperating ledge 118 of the casing 107. A relatively stiff spring 110 is located in a recess 120 of the tape bending member 106 to act against the cutter support member 102. The cutter support member provides a surface which is preferably formed in the shape of a button 112 or the like and which can be depressed by a user using manual force.

Figure 6a to 6c show the cutting arrangement of Figure 5 in use. Figure 6a shows the cutting arrangement in its ready to cut state, that is with the blade 104 spaced from the tape 4 and the lower surface 106a of the tape bending member 106 just in contact with the tape 4.

When the button 112 is depressed, the relatively weak spring 114 is compressed first against the ledge 118 as shown in Figure 6b and causes the tape bending member 106 to depress the tape 4 against the stepped portion 124 of the tape support surface, thereby bending the tape 4. The blade 104 is simultaneously caused to be lowered until it is just in contact with the tape 4. As the button 112 is further depressed (Figure 6c), the relatively stiff spring 110 is depressed to cause the cutter support member 102 to move relative to the tape bending member 106 to cause the blade 104 to cut the tape. This then provides a portion of tape with a bent portion just behind the cut trailing edge. When the button 112 is released, the cutting arrangement resumes its ready-to-cut position under the action of the springs.

Figures 7a and 7b show an alternative embodiment of the invention. As shown in Figure 7a, there is an anvil 202 having a cutting surface 204 against which the tape 4 rests

during cutting. The anvil 202 has adjacent the surface 204 a stepped portion 206 over which the tape 4 is bent during cutting as described later. Reference numeral 208 denotes a moving cutter support member which has a tape bending part 210 and which carries a blade for cutting 212.

To perform a cutting operation, the moving cutter support 208 is moved towards the anvil 202 so that the tape bending part 210 bends the tape 4 against the stepped portion 206 of the anvil 202 and so that the blade 212 cuts the tape 4. This is shown in Figure 7b.

When the blade is released after cutting, the substrate or image receiving layer recovers to its original shape whereas the backing layer, preferably of paper, remains bent so that the backing layer can be peeled off easily.

THE CLAIMS DEFINING THE INVENTION ARE AS FOLLOWS:-

1. A tape cutting apparatus for cutting off a portion of tape supplied thereto comprising first and second layers secured one to another by an adhesive layer, the first layer of said tape being formed of a material having a resilience greater than that of the second layer, the apparatus comprising:

a cutter support member carrying a blade and having a tape holding surface located to hold ~~for holding~~ said tape during cutting;

a tape support surface which supports the tape during cutting at both sides of a ~~said~~ cutting location with the second layer of the tape adjacent said tape support surface;

means for bringing the blade into contact with the tape at said cutting location during a cutting step in which the tape is held at both sides of said cutting location, the apparatus further comprising a tape bending surface over which the tape is bent during said cutting step such that when the tape is released the first and second layers tend to separate from one another at the cut edge.

2. A tape cutting apparatus as claimed in claim 1 wherein said tape support surface has a stepped portion over which the tape passes and which provides said tape bending surface.

3. A tape cutting apparatus as claimed in claim 2 in which the tape support surface includes the facing surface of an anvil against which the tape is cut by the blade.

4. A tape cutting apparatus as claimed in claim 3 in which the anvil comprises an angled portion over which the tape extends before being bent over said stepped portion.

5. A tape cutting apparatus as claimed in claim 3 or 4 in which the cutter support member is fixedly mounted and the anvil is mounted for movement towards and away from said cutter support member.

6. A tape cutting apparatus as claimed in claim 1 in

AUSTRALIA PATENT OFFICE MB

which the lower surface of the cutter support member comprises an angled surface portion facing said tape support surface.

7. A tape cutting apparatus as claimed in claim 6 in which the cutter support member carries a tape guide arranged to move against said angled surface portion of the cutter support member during cutting.

8. A tape cutting apparatus as claimed in any one of the preceding claims and a supply of said tape.

9. A tape cutting apparatus as claimed in claim 8 wherein the first layer of the tape is formed of a polyester material and the second layer is formed of paper.

10. A tape cutting apparatus as claimed in claim 1 wherein the tape bending surface is located downstream of the cutting location relative to the direction of movement of the tape.

11. A tape cutting apparatus as claimed in claim 1 which comprises a tape bending member capable of relative movement with respect to the tape bending surface to cause the tape to bend before it is cut.

12. A tape cutting apparatus as claimed in claim 1 wherein the cutting action causes the tape to be bent over the tape bending surface.

13. A tape cutting apparatus for cutting off a portion of tape comprising first and second layers secured one to another by an adhesive layer, the apparatus comprising:

a cutter support member carrying a blade and being mounted for movement, during a cutting step, relative to a tape support location where the tape is supported to bring the blade into contact with the tape;

an anvil having a facing surface which provides at the tape support location a tape support surface on which the tape is supported during cutting, said tape support surface having a stepped portion over which the tape passes, said anvil further comprising an angled portion

AUSTRALIA PATENT OFFICE

over which the tape extends before being bent over said stepped portion, during said cutting step.

14. A tape cutting apparatus as claimed in claim 13 in which the cutter support member is fixedly mounted and the anvil is mounted for movement towards and away from said cutter support member.

15. A tape cutting apparatus as claimed in claim 13 in which the lower surface of the cutter support member comprises an angled surface portion facing said tape support location.

16. A tape cutting apparatus as claimed in claim 15 in which the cutter support member carries a tape guide arranged to move against said angled surface portion of the cutter support member during cutting.

17. A tape cutting apparatus as claimed in claim 13 wherein the cutting action causes the tape to be bent over the tape bending surface.

18. A tape cutting apparatus for cutting off a portion of tape comprising first and second layers secured one to another by an adhesive layer, the apparatus comprising a cutter support member carrying a blade and being mounted for movement, during a cutting step, relative to a tape support location where the tape is supported to bring the blade into contact with the tape, the apparatus further comprising a tape bending surface over which the tape is bent during said cutting step such that when the tape is released the first and second layers tend to separate from one another at the cut edge, wherein the lower surface of the cutter support member comprises an angled surface portion facing said tape support location.

19. A tape cutting apparatus as claimed in claim 18 in which the cutter support member carries a tape guide arranged to move against said angled surface portion of the cutter support member during cutting.

20. A tape cutting apparatus as claimed in claim 18

AUSTRALIA PATENT OFFICE

wherein the cutting action causes the tape to be bent over the tape bending surface.

21. A tape cutting apparatus for cutting off a portion of tape comprising first and second layers secured one to another by an adhesive layer, the apparatus comprising a cutter support member carrying a blade and being mounted for movement, during a cutting step, relative to a tape support location where the tape is supported to bring the blade into contact with the tape, the apparatus further comprising a tape bending surface over which the tape is bent during said cutting step such that when the tape is released the first and second layers tend to separate from one another at the cut edge, wherein the tape bending surface is located downstream of a cutting location where the tape is cut, relative to the direction of movement of the tape.

22. A tape cutting apparatus as claimed in claim 21 wherein there is provided at the tape support location a tape support surface facing the cutter support member for supporting the tape during cutting, the tape support surface having a stepped portion over which the tape passes and which provides said tape bending surface.

23. A tape cutting apparatus as claimed in claim 22 in which the tape support surface includes the facing surface of an anvil against which the tape is cut by the blade.

24. A tape cutting apparatus as claimed in claim 23 in which the anvil comprises an angled portion over which the tape extends before being bent over said stepped portion.

25. A tape cutting apparatus as claimed in claim 23 or 24 in which the cutter support member is fixedly mounted and the anvil is mounted for movement towards and away from said cutter support member.

26. A tape cutting apparatus as claimed in claim 21 in which the lower surface of the cutter support member comprises an angled surface portion facing said tape

AUSTRALIA PATENT OFFICE

support location.

27. A tape cutting apparatus as claimed in claim 26 in which the cutter support member carries a tape guide arranged to move against said angled surface portion of the cutter support member during cutting.

28. In combination, a tape cutting apparatus as claimed in claim 21 and a supply of tape in which the first layer of said tape is formed of a material having a resilience greater than that of the second layer, wherein the second layer lies away from the blade during cutting.

29. A tape cutting apparatus as claimed in claim 28 in which the first layer is formed of a polyester material and the second layer is formed of paper.

30. A printing device for printing an image on an image receiving tape comprising first and second layers secured one to another by an adhesive layer, the first layer of said tape being formed of a material having a resilience greater than that of the second layer, the device comprising:

a region for removably receiving a supply of said image receiving tape;

a printhead located at a print zone along a path of said image receiving tape for printing messages on said image receiving tape; and

a tape cutting apparatus as claimed in any one of claims 1 to 7 and 10 to 12.

31. A printing device as claimed in claim 30 comprising a supply of said image receiving tape.

32. A printing device as claimed in claim 31 wherein the supply of image receiving tape is housed in a cassette.

33. A tape cutting apparatus substantially as hereinbefore described with reference to or as shown in the accompanying drawings.

DATED this 27th day of June 1995

ESSELTE DYMO NV

Patent Attorneys for the Applicant:

F.B. RICE & CO.

AUSTRALIA PATENT OFFICE

ABSTRACT

TAPE CUTTING APPARATUS

A tape cutting apparatus is described for cutting off a portion of tape (4) comprising first and second layers (4a,4c) secured one to another by an adhesive layer (4b). The apparatus comprises an anvil (40) and a cutter support member (31) carrying a blade (30), the cutter support member and the anvil being mounted for relative movement to bring the blade into contact with a facing surface of the anvil. The facing surface has a stepped portion (40) over which the tape is bent during cutting such that when the tape is released the first and second layers tend to separate from one another at the cut edge.

Fig 1

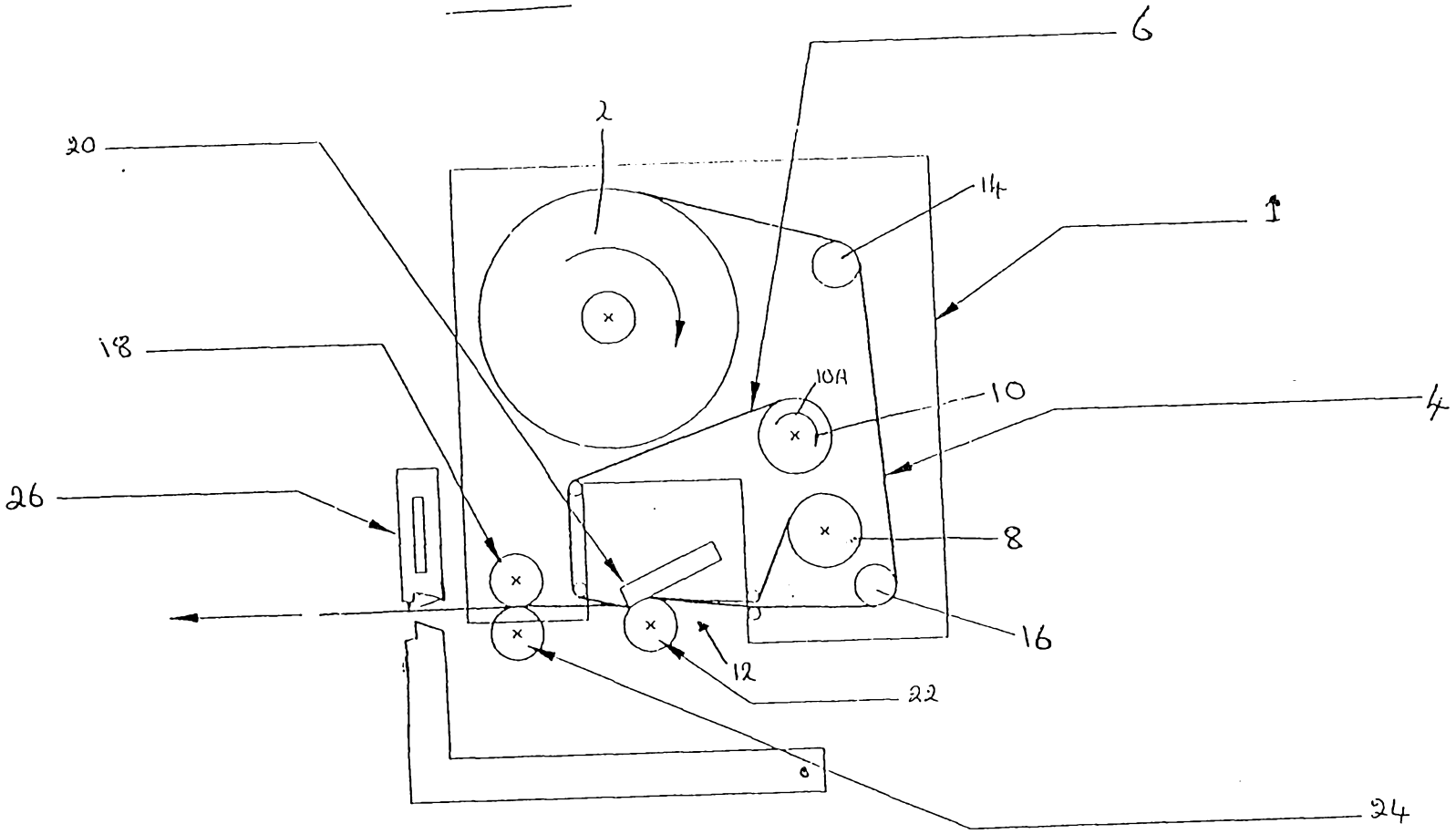

37023/93

fig 2

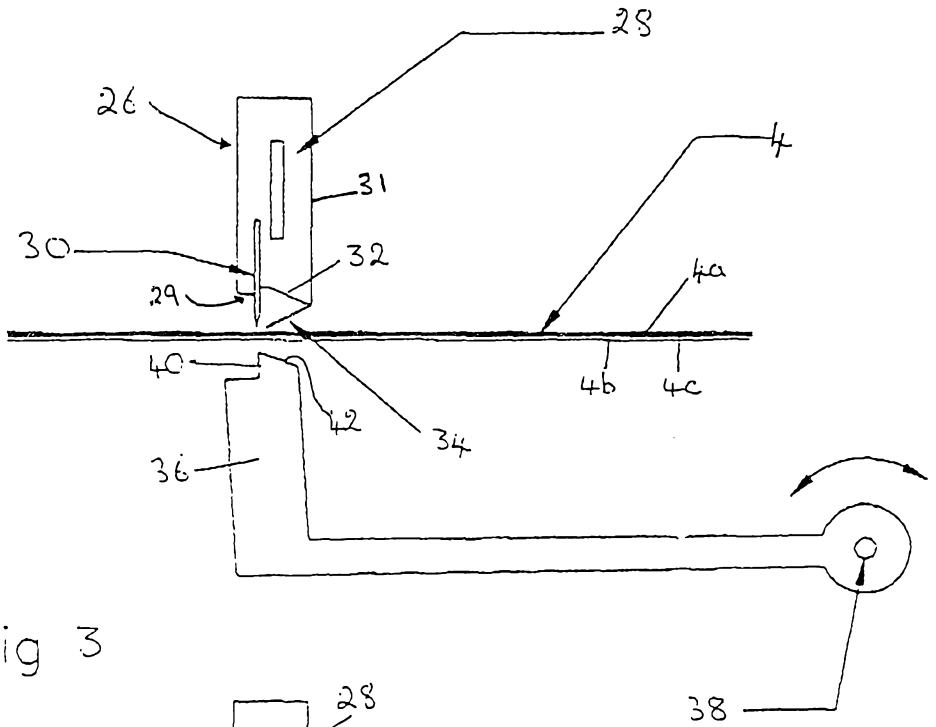

fig 3

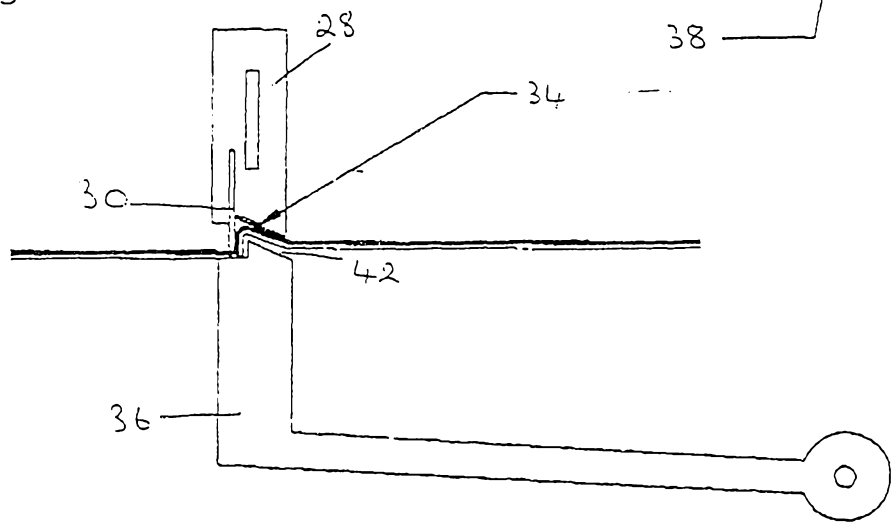

fig 4

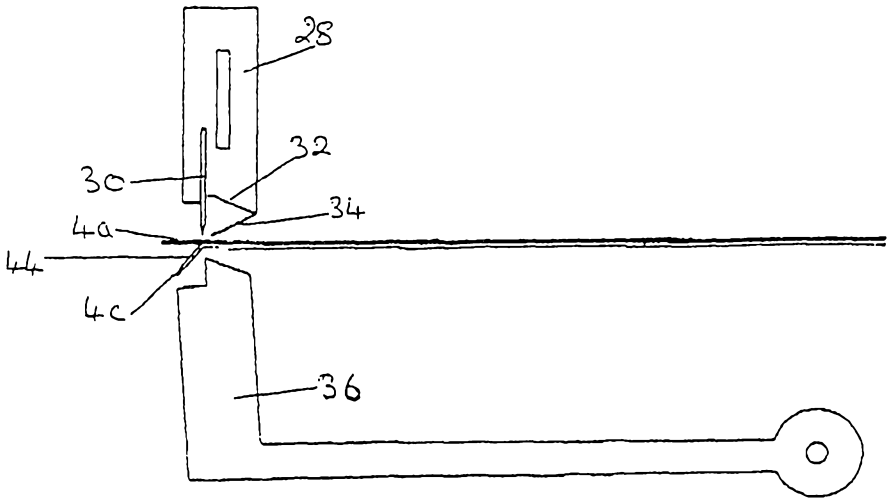

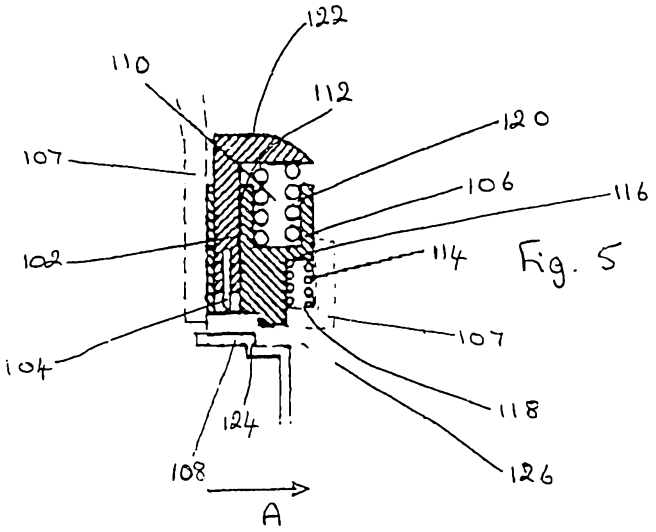

Fig. 5

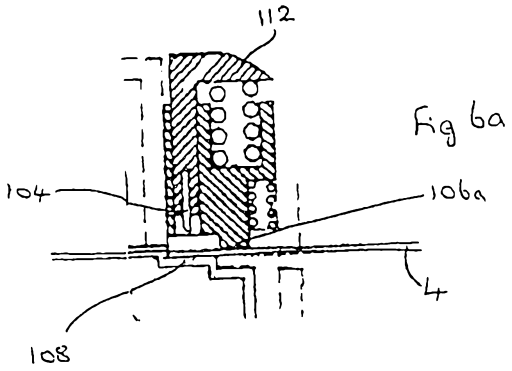

Fig 6a

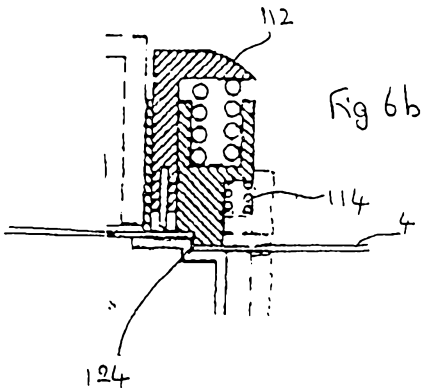

Fig 6b

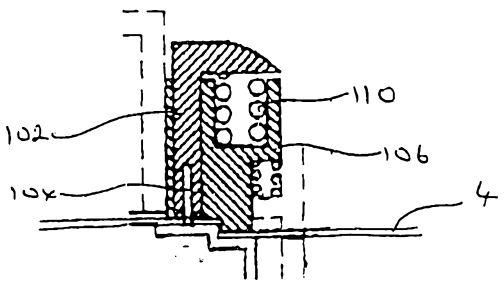

Fig 6c

Fig. 7a

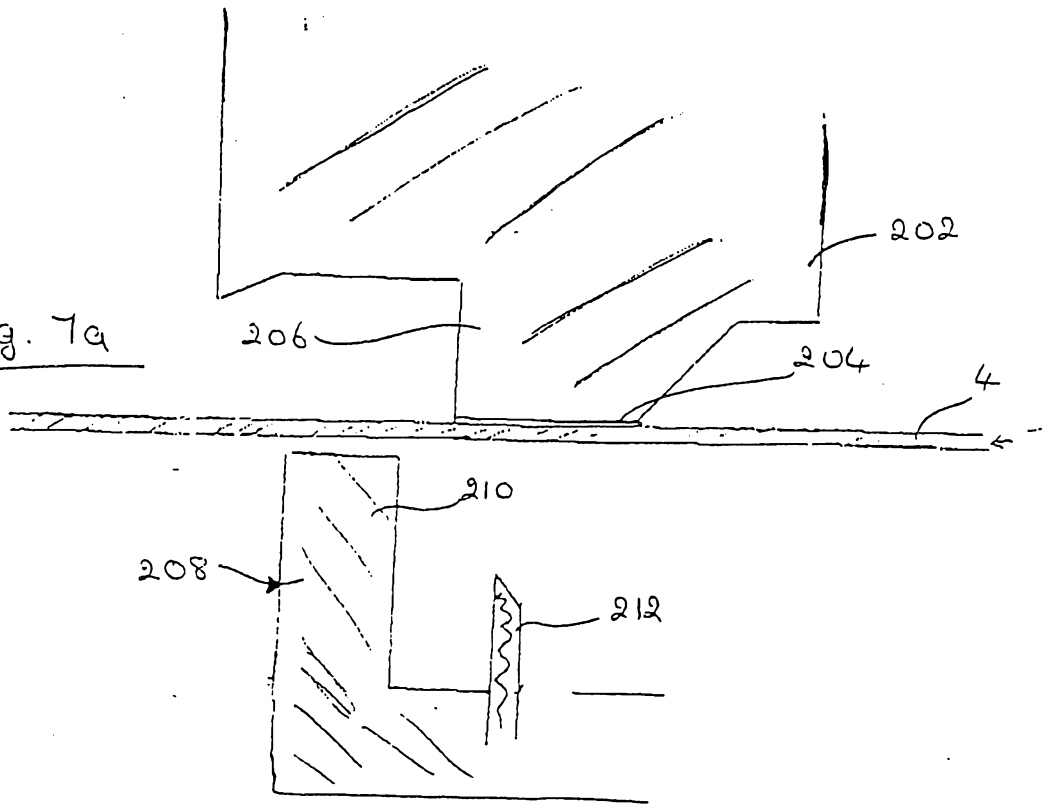

Fig. 7b

