US00D375302S

United States Patent [19]

Darius et al.

[11] **Patent Number: Des. 375,302**

[45] **Date of Patent: **Nov. 5, 1996**

[54] **VIDEO MONITOR OVERLAY**

[75] Inventors: **Ivan H. Darius**, Richardson; **Staci Ault**, Dallas; **Timothy W. Terleski**, Garland, all of Tex.

[73] Assignee: **MTI, Inc.**, Dallas, Tex.

[**] Term: **14 Years**

[21] Appl. No.: **47,600**

[22] Filed: **Dec. 8, 1995**

[52] **U.S. Cl.** **D14/114**

[58] **Field of Search** D14/113–4, 239; D18/18, 22, 12; 348/832–5; 359/599, 601, 608–10, 614, 894

[56] **References Cited**

U.S. PATENT DOCUMENTS

D. 311,739	10/1990	De Lucchi	D14/114
D. 338,194	8/1993	Hartwig	D14/114
D. 342,063	12/1993	Howitt et al.	D14/114
D. 350,342	9/1994	Sack	D14/114
D. 357,470	4/1995	Bergdoll et al.	D14/114
D. 358,587	5/1995	Solero	D14/114
D. 360,199	7/1995	Shu-Ying	D14/114
D. 361,993	9/1995	Egly et al.	D14/114

Primary Examiner—M. H. Tung

Attorney, Agent, or Firm—Haynes and Boone, L.L.P.; Jeffrey M. Becker

[57] **CLAIM**

The ornamental design for a video monitor overlay, as shown and described.

DESCRIPTION

FIG. **1** is a perspective view of the video monitor overlay showing our new design, on a reduced scale;

FIG. **2** is a front view thereof;

FIG. **3** is a side view thereof, the opposite side is a mirror image;

FIG. **4** is a rear view thereof;

FIG. **5** is a top plan view thereof; and,

FIG. **6** is a bottom plan view thereof.

1 Claim, 3 Drawing Sheets

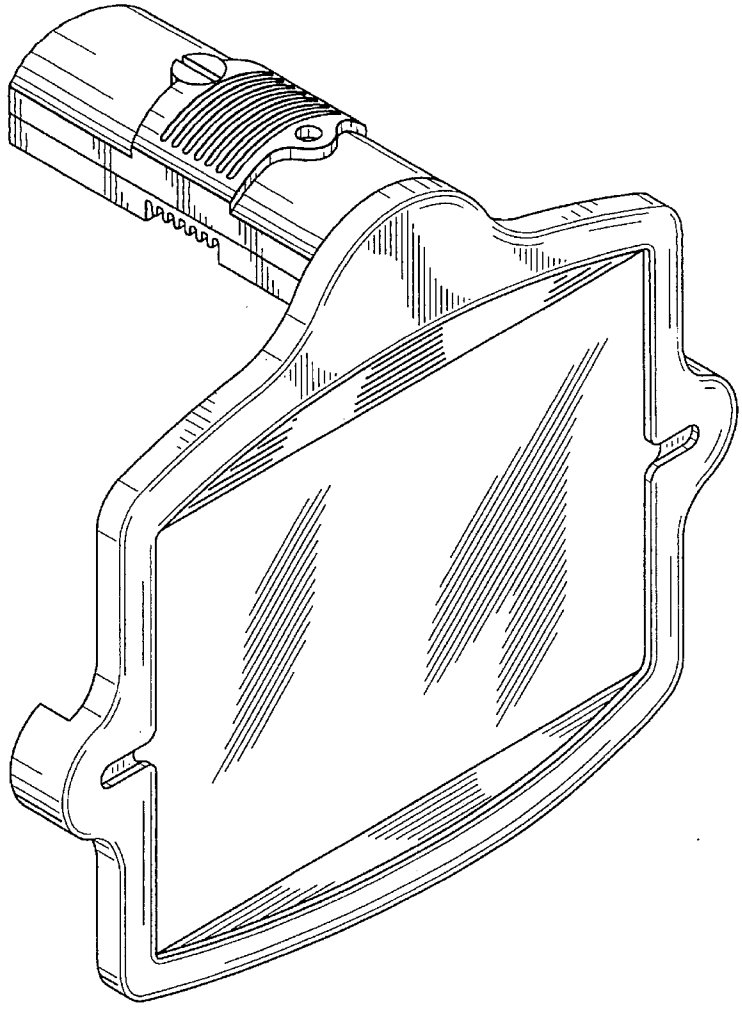

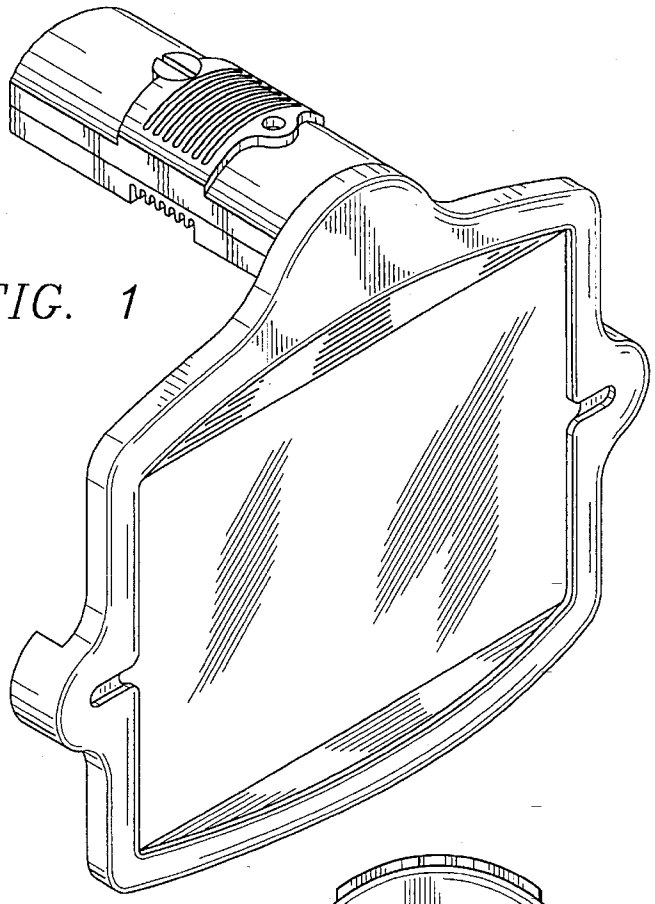

FIG. 1

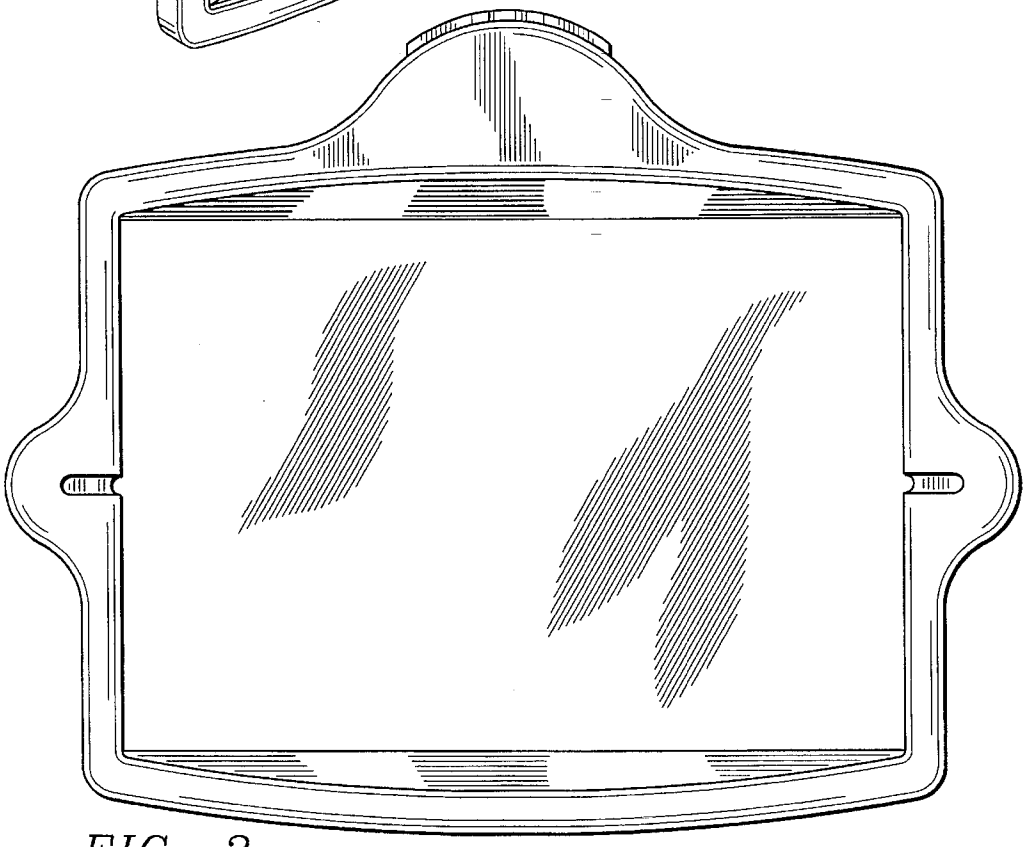

FIG. 2

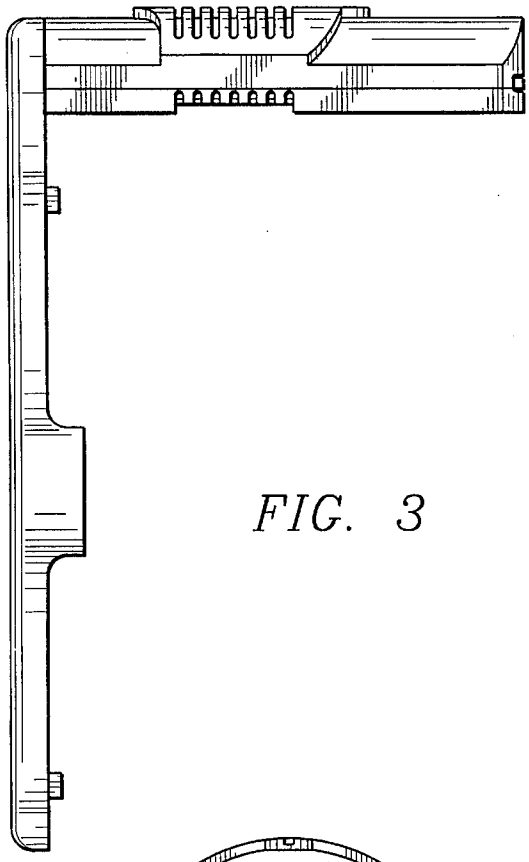

FIG. 3

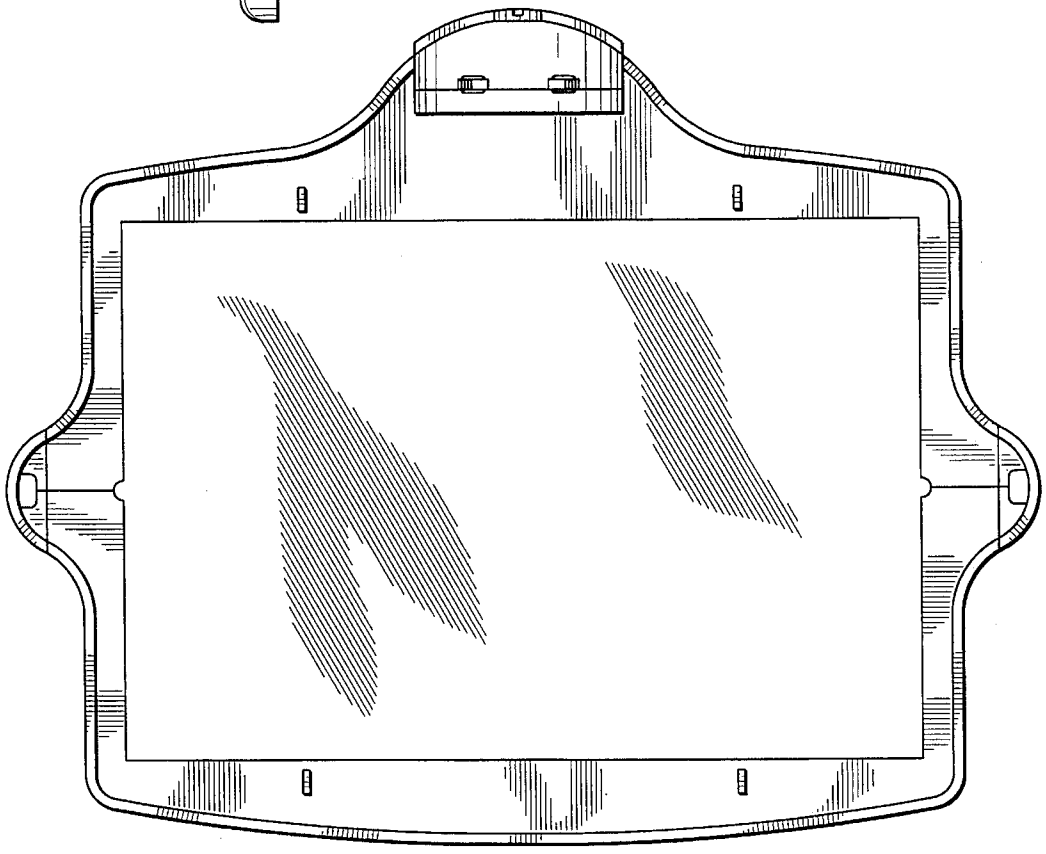

FIG. 4

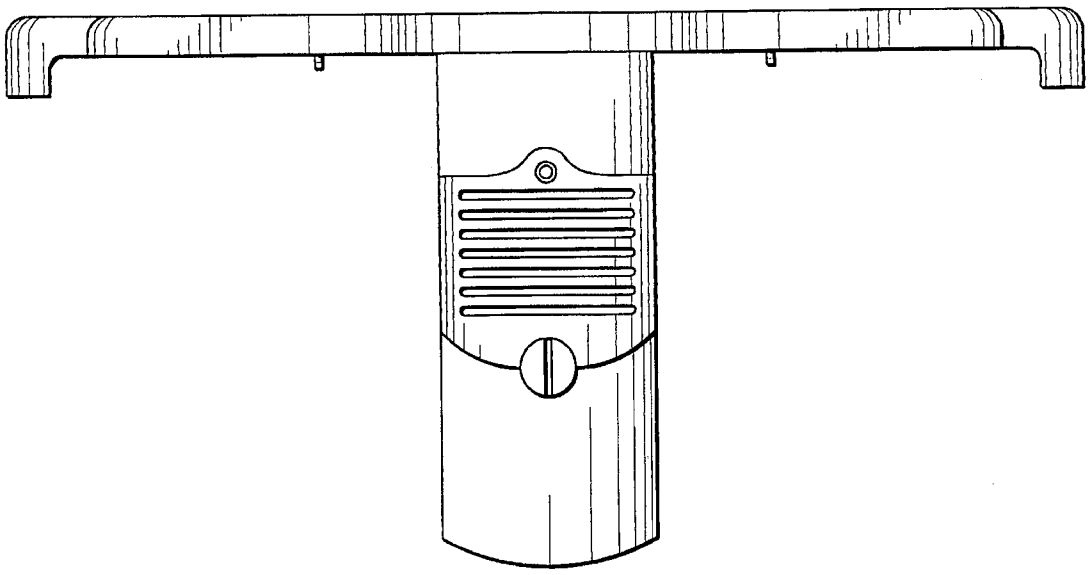

FIG. 5

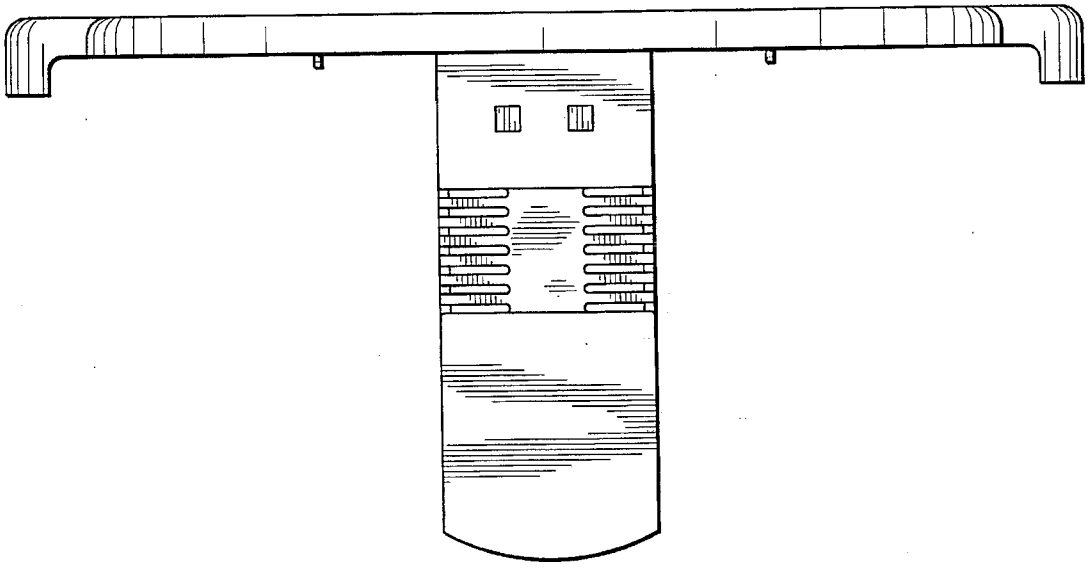

FIG. 6