AU9516679

(12) PATENT ABRIDGMENT (11) Document No. AU-B-16679/95
(19) AUSTRALIAN PATENT OFFICE (10) Acceptance No 695889

(54) Title
A SEALING STRIP AND METHOD OF SEALING

International Patent Classification(s)
(51)[6] **B05B 015/04**

(21) Application No. : **16679/95** (22) Application Date **14.02.95**

(87) PCT Publication Number : **WO95/21700**

(30) Priority Data

(31) Number	(32) Date	(33) Country
9402812	**14.02.94**	**GB UNITED KINGDOM**

(43) Publication Date : **29.08.95**

(44) Publication Date of Accepted Application : **27.08.98**

(71) Applicant(s)
SPEEDARRIVE PROJECTS LTD.

(72) Inventor(s)
ROBIN WILLIAM HILLS

(74) Attorney or Agent
PATENT ATTORNEY SERVICES , 26 Ellingworth Parade, BOX HILL VIC 3128

(56) Prior Art Documents
DE 4106960
WO 90/15668
GB 2223425

(57) Claim

1. A sealing strip provided in the form of an elongate sealing portion formed of resiliently compressible material and an elongate attachment portion extending laterally from the sealing portion, the sealing portion having a cross-section with a convex surface along a first side thereof with an adhesive surface thereon and/or on the opposite surface thereof and the attachment portion having an adhesive surface facing in substantially the same direction as said convex surface of the sealing portion.

18 A method of sealing a gap between a body (11, 13, 14) of a motor vehicle and an edge of a body panel that is movable between open and closed positions relative to the body (11, 13, 14) while at least portions of the motor vehicle are sprayed, which method uses a sealing strip provided in the form of an elongate sealing portion (5 7) formed of resiliently compressible material and an elongate attachment portion (6, 8) which extends laterally from the sealing portion (5, 7) and which is provided with an adhesive surface (2, 4) for affixing the sealing strip to the body panel, the method including the steps of

moving the body panel (12, 13) to its open position.

. . ./2

adhering the sealing strip by means of the adhesive surface (2, 4) along an edge of an inner surface of the body panel (12, 13) so the sealing portion (5, 7) projects beyond the edge of the body panel, and

moving the body panel (12, 13) to its closed position so that the sealing portion (5,7) seals the gap between the edge of the body panel (12, 13) and the body

OPI DATE 29/08/95 APPLN. ID 16679/95
AOJP DATE 12/10/95 PCT NUMBER PCT/GB95/00304

AU9516679

IN

(51) International Patent Classification 6 : B05B 15/04

A1

(11) International Publication Number: WO 95/21700

(43) International Publication Date: 17 August 1995 (17.08.95)

(21) International Application Number: PCT/GB95/00304

(22) International Filing Date: 14 February 1995 (14.02.95)

(30) Priority Data:
9402812.3 14 February 1994 (14.02.94) GB

(71) Applicant *(for all designated States except US)*: SPEEDARRIVE PROJECTS LTD. [GB/GB]; Devonshire Service Station, Chalfont Road, Seer Green, Bucks HP9 2QP (GB).

(72) Inventor; and
(75) Inventor/Applicant *(for US only)*: HILLS, Robin, William [GB/GB]; 45 New Road, Stokenchurch, High Wycombe, Bucks HP14 3RT (GB).

(74) Agent: UNWIN, Stephen, Geoffrey; S.G. Unwin & Co., Brookfurlong Farmhouse, Islip, Oxford OX5 2TJ (GB).

(81) Designated States: AM, AT, AU, BB, BG, BR, BY, CA, CH, CN, CZ, DE, DK, EE, ES, FI, GB, GE, HU, JP, KE, KG, KP, KR, KZ, LK, LR, LT, LU, LV, MD, MG, MN, MW, MX, NL, NO, NZ, PL, PT, RO, RU, SD, SE, SI, SK, TJ, TT, UA, US, UZ, VN, European patent (AT, BE, CH, DE, DK, ES, FR, GB, GR, IE, IT, LU, MC, NL, PT, SE), OAPI patent (BF, BJ, CF, CG, CI, CM, GA, GN, ML, MR, NE, SN, TD, TG), ARIPO patent (KE, MW, SD, SZ, UG).

Published
With international search report

(54) Title: A SEALING STRIP AND METHOD OF SEALING

(57) Abstract

The sealing strip comprises an elongate sealing portion (7) formed of resiliently compressible material such as foam and an elongate attachment portion (8) extending laterally from the sealing portion (7). The attachment portion is provided with adhesive (2) to affix it to the rear side of a first body panel (9) so that the sealing portion (7) is located in a gap between the panel (9) and an adjacent component (10) so as to seal or mask the gap therebetween. The sealing portion and attachment portion are preferably integrally formed by an extrusion process. The sealing strip has particular application to the sealing of the "B" post gap of a motor vehicle.

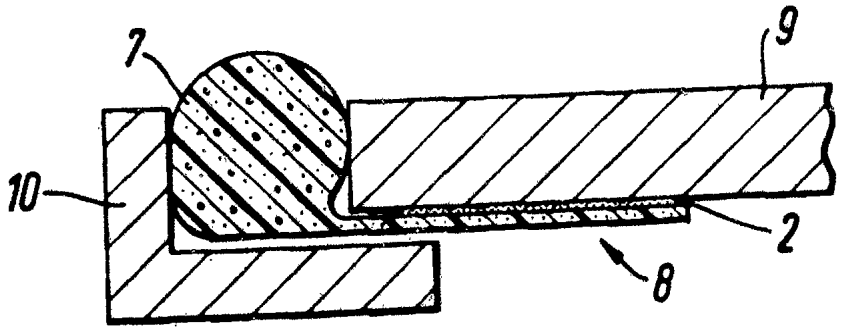

A SEALING STRIP AND METHOD OF SEALING

Field of the Invention

This invention relates to sealing strips and to methods of sealing a gap using such strips. A particular application of the invention is to the sealing of gaps around body panels of a vehicle which is being sprayed to prevent overspray from entering the sealed gaps.

Background Art

US Patents nos. 5128176 and 5260097 describe sealing strips which can be used for sealing or masking gaps between vehicle bodies and the edges of vehicle body panels, such as doors, bonnets or boot lids. Among the sealing strips described in these patents are sealing strips that comprise a length of polymeric foam having a circular or oval cross section and a layer of pressure sensitive adhesive along at least one side surface of the length of foam that can be used to releasably adhere the sealing strip to a vehicle body or body panel in a position along and extending across a gap between adjacent body panels.

The sealing strips described in these patents are, however, difficult to affix accurately along some of such gaps and are only capable of providing an effective seal along certain of such gaps on vehicle bodies.

WO-A-90/15668 discloses a masking device and, in particular, one with a triangular form of cross-section for use in masking a B-post gap of a motor vehicle body. The device is secured to a fixed panel of the body by means of an adhesive tape attached to the base surface thereof so that the device is deformed as a door is closed thereon in order to seal the gap between the fixed panel and the door.

Disclosure of the Invention

The present invention aims to provide sealing strips which can be used for sealing gaps between vehicle bodies and the edges of vehicle

AUSTRALIAN 13 PATENT OFFICE

body panels, such as doors, bonnets or boot lids, and which have novel shapes and constructions that make them easier to apply along certain of such gaps, and which make them able to easily provide seals across certain of such gaps that cannot easily be sealed using the sealing strips described in the prior art referred to above.

According to a first aspect of the invention, there is provided a sealing strip in the form of an elongate sealing portion formed of resiliently compressible material and an elongate attachment portion extending laterally from the sealing portion, the sealing portion having a cross-section with a convex surface along a first side thereof with an adhesive surface thereon and/or on the opposite side thereof and the attachment portion having an adhesive surface facing in substantially the same direction as said convex surface of the sealing portion.

According to a second aspect of the invention, there is provided a sealing strip in the form of an elongate sealing portion formed of resiliently compressible material and an elongate attachment portion extending laterally from the sealing portion, the sealing portion having a cross-section with a convex surface along a first side thereof and the attachment portion having an adhesive surface facing in substantially the same direction as said convex surface of the sealing portion, the attachment portion being sufficiently longitudinally bendable adjacent said sealing portion to enable the attachment portion to be bent so that a surface thereof opposite said adhesive surface lies against a surface of said sealing portion opposite said convex surface thereof.

According to another aspect of the invention, there is provided a sealing strip comprising an elongate sealing portion formed of resiliently compressible material and an elongate attachment portion extending in a first direction laterally from the sealing portion with an adhesive surface being provided on at least part of the attachment portion, the sealing portion having a greater thickness in a direction substantially perpendicular to the said first direction than the

STRALIAN
PT OFFICE

attachment portion and so as to provide a longitudinal hinge between the sealing portion and the attachment portion

According to further aspects of the invention, there is provided a method of sealing a gap between a body (11, 13, 14) of a motor vehicle and an edge of a body panel that is movable between open and closed positions relative to the body (11, 13, 14) while at least portions of the motor vehicle are sprayed, which method uses a sealing strip provided in the form of an elongate sealing portion (5, 7) formed of resiliently compressible material and an elongate attachment portion (6, 8) which extends laterally from the sealing portion (5, 7) and which is provided with an adhesive surface (2, 4) for affixing the sealing strip to the body panel, the method including the steps of

moving the body panel (12, 13) to its open position,

adhering the sealing strip by means of the adhesive surface (2, 4) along an edge of an inner surface of the body panel (12, 13) so the sealing portion (5, 7) projects beyond the edge of the body panel, and

moving the body panel (12, 13) to its closed position so that the sealing portion (5,7) seals the gap between the edge of the body panel (12, 13) and the body

Also provided is a method of sealing a gap between adjacent surfaces of first and second components (20, 21) of a structure to be sprayed, which method uses a sealing strip provided in the form of an elongate sealing portion (5, 7) formed of resiliently compressible material and an elongate attachment portion (6, 8) extending laterally from the sealing portion (5, 7), the sealing portion (5, 7) having a cross-section with a convex surface along a first side thereof and the attachment portion (6, 8) having an adhesive surface (2, 4) facing in

AUSTRALIAN PATENT OFFICE

substantially the same direction as said convex surface of the sealing portion (5, 7), the method including the steps of

adhering the adhesive surface (2, 4) of the attachment portion (5,7) of the sealing strip to a surface of the first component (20) with the sealing portion (5, 7) projecting therefrom, and

longitudinally bending the attachment portion (6, 8) adjacent the sealing portion (5, 7) and pushing the sealing portion (5, 7) into the gap so that the sealing portion (5, 7) seals the gap between the first and second components (20, 21)

It should be noted that terms such as "upper" and "lower" used in the following description refer only to directions and the accompanying drawings and are not to be interpreted as restricting the invention to any particular orientation

Brief Description of Drawings

The invention will now be further described, merely by way of example, with reference to the accompanying drawings, in which

PATENT OFFICE

Figures 1, 2 and 3 are cross-sectional views of three forms of sealing strip according to the present invention;

Figure 4 is a cross-sectional view of a sealing strip as shown in Figure 2 installed to seal the gap between a vehicle body panel and the adjacent bodywork;

Figure 5 is a cross-sectional view from above of sealing strips according to the present invention installed to seal the "B" post gap and "C" post gap at the front and rear edges of a vehicle rear door;

Figures 6(A) and (B) are cut-away views showing a further application of the sealing strip shown in Figure 2;

Figures 7(A) to 7(F) are cross-sectional side views of further embodiments of a sealing strip according to the present invention; and

Figure 8 shows a view of a sealing strip provided in roll form.

Best Mode of Carrying out the Invention

Figure 1 shows a cross-section of a first embodiment of a sealing strip according to the invention. This comprises an elongate sealing portion 5 formed of resilient, compressible, bendable material such as foam with an elongate laterally extending attachment portion in the form of an adhesive strip 6 attached thereto. The sealing portion 5 has a substantially circular or oval cross-section as shown so that it has a convex surface along a first side thereof facing in a first direction (upwards as shown in Figure 1). The adhesive strip 6 has a layer 4 of pressure sensitive adhesive applied thereto so as to present an adhesive surface facing in the same direction, ie upwards in Figure 1. A removable protective liner (not shown) may be provided to cover the adhesive layer when not in use, if required.

The elongate sealing portion 5 may be formed of a polymeric foam as used in conventional sealing strips. The adhesive strip 6 may be any

suitable form of adhesive tape, whether or paper or plastics, with a layer of adhesive 4 applied to one surface thereof. The strip 6 may be affixed to the sealing portion 5 by means of an adhesive band (not shown) provided on the sealing portion 5, or by means of the layer of adhesive 4 (as shown in Figure 7(A)), or both.

Figure 2 shows a cross-section of a second embodiment of a sealing strip according to the invention. This comprises an elongate sealing portion 7 with a laterally extending attachment portion in the form of an adhesive strip 8 integrally formed therewith. The sealing portion 7 and adhesive strip 8 are integrally formed of a resilient compressible material such as foam and may, for example, be produced by an extrusion process. The sealing portion 7 is of generally circular or oval shape so that is presents a convex face in a first direction (upwards as shown in Figure 2). The adhesive strip 8 comprises a thin strip 3 of foam extending laterally from the sealing portion 7 with a layer of adhesive 2 applied to one surface thereof facing in the same direction, ie upwards in Figure 2.

Figure 2 illustrates the adhesive strip 8 extending substantially tangentially from the sealing portion 7. In another arrangement, the adhesive strip 8 may extend substantially radially from the sealing portion 7 as shown in Figure 3. It will be seen that the adhesive strip 8 has a substantially uniform thickness in a direction normal to the adhesive surface thereof and that the sealing portion 7 has a larger major thickness in the same direction compared to the adhesive strip 8.

Figures 7(B), 7(C) and 7(D) show further embodiments of a sealing strip according to the invention. The embodiment shown in Figure 7(B) is similar to that shown in Figure 2 with the sealing portion 7 and attachment portion 8 formed integrally with each other but in this case the attachment portion has a more substantial thickness in a direction normal to the adhesive surface 2. However, it should be noted that, as in the embodiments shown in Figures 1 to 3, the sealing portion 7 still has a thickness greater than that of the attachment portion 8 (for reasons discussed further below).

Figures 7(C) and 7(D) illustrate further embodiments of the sealing strip. In Figure 7(C), the sealing portion 7 has a more oval rather than circular cross-section. Also, a layer of adhesive 2 is provided on the lower surface of the sealing portion 3. In Figure 7(D), both the sealing portion 7 and then attachment portion 8 are more rectangular in cross-section. Also, a layer of adhesive 2 is provided on the upper surface of the sealing portion 7.

Figure 7(E) shows yet another embodiment of a sealing strip according to the invention. This comprises a sealing portion 23 and an attachment portion 24 which are formed separately and then joined together side by side. Both the sealing portion 23 and the attachment portion 24 have a substantially circular or oval cross-section but the sealing portion has a greater thickness (in the upward direction as shown in the Figures) than the attachment portion 24. The two portions are secured together by adhesive (not shown) or by any other suitable means. The two portions of this form of sealing strip may be co-extruded either with a cross-section as shown or as separate portions which bond together as they emerge from the extrusion die. A layer of adhesive 2 is provided on the attachment portion 24 as in other embodiments.

Figure 7(F) shows an embodiment similar to that of Figure 3 but with an attachment portion 8 of more substantial thickness. A layer of adhesive 2 is also provided on both sides of the attachment portion 8 so the sealing strip is symmetrical and can be used either way round.

The attachment portion 8 is preferably bendable longitudinally adjacent to the sealing portion 7 so that the sealing portion 7 and attachment portion 8 can be folded back to back as will be described further below in relation to Figure 6.

Figure 4 illustrates the use of the sealing strip of Figure 2 to seal the gap between a vehicle body panel 9, such as a bonnet, and the surrounding bodywork 10. In this case, the bonnet is first moved to its open position, the sealing strip is then attached to the rear face of

the bonnet 9 by means of the adhesive strip 8) that the sealing portion 7 lies adjacent to the edge of the bonnet 9. When the bonnet 9 is closed, the sealing portion 7 fits or is compressed between the edge of the bonnet 9 and the surrounding bodywork 10 so as to seal the gap therebetween as shown in Figure 4.

In the application illustrated in Figure 4, the sealing strip is affixed to the rear edge of the panel which is to be sprayed rather than, as with the prior art, to the edge of the aperture in which the panel fits. In some cases one form of attachment may be more appropriate than the other.

Figure 5 illustrates an application of the sealing strip where known forms of sealing strip cannot easily be used. Figure 4 is a schematic plan view of the side of a motor vehicle showing a rear wing 11, a rear door 12, a front door 13 and a front wing 14. Between these panels are the "A" post 15, "B" post 16 and "C" post 17. When it is desired to spray, say the rear door 12, it is necessary to seal the gap between the "B" post 16 and the front edge of the rear door 12 and the rear edge of the front door 13, which is known as the "B" post gap, and also the gap between the "C" post 17, the front edge of the rear wing 11 and the rear edge of the rear door 12, which is known as the "C" post gap. With a conventional sealing strip, it is necessary to try to affix the strip around the edges of the aperture in which the rear door 12 fits so that, when the rear door 12 is closed, the sealing strip is trapped between the door 12 and the adjacent panels. However, this is very difficult to achieve in gaps such as as the "B" post gap due to the shape and depth of the gap. If a conventional sealing strip is, for example, affixed to the "B" post 16, it simply lies within the "B" post gap and does not seal the gap between the front edge of the rear door 12 and the rear edge of the front door 13.

With a sealing strip such as that shown in Figures 2, the rear door 12 is first opened and the strip can then be attached by means of the adhesive strip 8 attached thereto around the edge of the inner surface of the rear door 12. In many cases, it will also be necessary to open

the front door 13 to provide access to the front edge of the rear door 12. The sealing strip is attached so that the sealing member 7 thereof projects beyond the edges of the rear door 12 so, when the door 12 is closed again, the sealing portion 7 is positioned within and seals across the "B" post and "C" post gaps as shown in Figure 5 and so sealing the gap between the front edge of the rear door 12 and the rear edge of the front door 13. If adjacent panels, such as the rear wing 11 and front door 13 need to be masked this can be carried out in the conventional manner by affixing masking paper 18 to the projecting parts of the sealing member 7 by masking tape 19 as shown in the Figure.

A sealing strip such as that shown in Figure 2 can be used to seal other such gaps in a similar manner, eg by affixing to the rear side of the rear edge of the rear door 12 to seal the "C" post gap and, in some cases by affixing to the rear side of the rear edge of the front wing 14 to seal the "A" post gap.

Figures 6 (A) and (B) illustrate a further application of the sealing strip. In this case, the gap to be sealed is between two fixed components such as a vehicle bumper 20 and a front (or rear) body panel 21. The sealing strip is first attached to one component, eg the bumper 20, by means of the adhesive strip 8 with the sealing member 7 outermost and facing away from the gap to be sealed as shown in Figure 6(A). The adhesive strip 8 is then folded longitudinally so that the sealing portion 7 is folded back and can be pushed into the gap to be sealed as shown in Figure 6(B). Conventional masking can then be attached to the sealing strip in a known manner. It will be appreciated that such a gap is difficult to seal with a conventional sealing strip as it would be necessary to push the sealing strip into position before it adheres to one of the components, whereas, in practice, the strip will tend to stick to a component as soon as the adhesive comes into contact with the component.

In all the applications described above, the sealing strip is removed from the body panel after the paint or other surface treatment has dried sufficiently.

Figures 4, 5 and 6 illustrate applications of the sealing strip shown in Figure 2. If will be appreciated that the sealing strips shown in Figure 1, Figure 3 and in Figures 7(A) and 7(F) may also be used in these applications.

The sealing strip described herein may be made in a variety of sizes and materials depending upon the application. For sealing gaps in a vehicle body prior to painting, it has been found that the sealing portion 7 conveniently has a width (in the direction in which the attachment portion extends laterally therefrom) in the range 5 to 50mm and the attachment portion 8 a width in the range 10 to 50mm.

The sealing portion preferably has a thickness (in a direction normal to the adhesive surface 2) in the range 5 to 50mm and the attachment portion preferably has a thickness in the range 0.1 to 30mm.

The combined width of the sealing portion and attachment portion is preferably in the range 20 to 90mm (so as to be wide enough to attach to a body panel and extend into a gap adjacent thereto which is to be sealed) and, as previously indicated, the sealing portion is preferably of greater thickness than the attachment portion. This is important for several reasons. Firstly, if the sealing portion and attachment portion are of different thickness, the sealing strip can be easily attached in the correct position around the edge of a panel by locating the edge of the panel in the step between the sealing portion and the attachment portion. Furthermore, the greater thickness of the sealing portion causes it to project beyond the edge of the panel into the space which is to be sealed (as illustrated in Figures 4 and 5). The change in thickness between the sealing portion and the attachment portion also provides a natural longitudinal hinge to assist in folding the sealing portion back over the attachment portion in applications such as that described above in relation to Figure 6.

In further embodiments of the invention (not shown), at least the sealing portion of the sealing strip may be hollow.

The sealing strip has substantially the same cross-section over its whole length and may be provided in any convenient length. Typically it may be provided in lengths of several metres in roll form (as illustrated in Figure 8). The sealing portion 7 can be formed of any material having sufficient resilience to be able to conform to the shape of a gap in which it is installed and to press against and thus seal the sides of the gap. Possible materials include: polymeric foam, synthetic sponge and rubber.

The sealing strip may conveniently be manufactured by an extrusion process.

If the sealing strip is to be used to seal gaps adjacent to a panel being sprayed, as described above, it also needs to be made of a material which will not be affected by the paint (or other material being sprayed), although it may absorb the paint, and should preferably be useable in and withstand temperatures in the range 0° to 80° C. The material should also be lint free so that it does not spread any dust or particles on the paint surface even when compressed air, eg at up to 150 psi (1000 KN/m^2), is passed over it and the adhesive should be strong enough to withstand this pressure without the sealing strip lifting off the component. The sealing strip should also be sufficiently flexible to be able to follow the contours of the component to which it is fitted.

The attachment portion and the sealing portion may also be formed of a tacky material in which case it would not be necessary to provide a layer or strip of adhesive to provide the required adhesive surface(s).

As indicated above, in some applications, it may be found advantageous to provide one or more bands of adhesive along the sealing strip in addition to that provided on the laterally extending attachment portion. A further band of adhesive may, for example, be provided on the

convex surface of the sealing portion which faces in the same direction as the adhesive layer on the laterally extending strip (as shown in Figure 7(D)) or on the opposite surface of the sealing portion. An adhesive layer may also be provided on both faces of an attachment portion as shown in Figure 7(F) which extends radially from the sealing member so that the sealing strip may be used either way round.

As well as acting to seal gaps at the edges of panels being sprayed, a sealing strip such as that described above can be used in place of hard line masking (such as masking tape) across the centre of a panel being sprayed. The sealing strip is attached to the panel by adhering the adhesive strip 8 to the panel so that the convex surface of the sealing portion 7 lies against the panel along the boundary of the area to be sprayed. The convex shape of the sealing portion 7 is such as to produce a "soft", indefinite edge to the resprayed area as some paint is able to penetrate the small space between the curved form of the sealing portion and the panel to which it is attached.

The sealing strip described above thus makes it easier to seal certain gaps, such as the "B" post gap, on a vehicle body and thus saves a considerable amount of time in the process of masking a vehicle body in preparation for spraying.

Industrial Applicability

The sealing strip and method of sealing described above can be used in the sealing or masking of vehicle body panels during paint spraying or other spraying treatments and in a wide range of other applications.

CLAIMS

1. A sealing strip provided in the form of an elongate sealing portion formed of resiliently compressible material and an elongate attachment portion extending laterally from the sealing portion, the sealing portion having a cross-section with a convex surface along a first side thereof with an adhesive surface thereon and/or on the opposite surface thereof and the attachment portion having an adhesive surface facing in substantially the same direction as said convex surface of the sealing portion.

2. A sealing strip provided in the form of an elongate sealing portion formed of resiliently compressible material and an elongate attachment portion extending laterally from the sealing portion, the sealing portion having a cross-section with a convex surface along a first side thereof and the attachment portion having an adhesive surface facing in substantially the same direction as said convex surface of the sealing portion, the attachment portion being sufficiently longitudinally bendable adjacent said sealing portion to enable the attachment portion to be bent so that a surface thereof opposite said adhesive surface lies against a surface of said sealing portion opposite said convex surface thereof.

3. A sealing strip as claimed in Claim 1 or 2 in which the sealing portion has a substantially circular or oval cross-section.

4. A sealing strip as claimed in Claim 1, 2 or 3 in which the attachment portion has a substantially uniform thickness in a direction normal to said adhesive surface, and said sealing portion has a larger major thickness in said direction normal to said first side thereof than does said attachment portion.

5. A sealing strip as claimed in Claim 4 in which the said thickness of the attachment portion is in the range 0.1mm to 30mm and the said thickness of the sealing portion is in the range 5 to 50mm.

AUSTRALIAN PATENT OFFICE

AMENDED SHEET

6. A sealing strip as claimed in any preceding claim in which the width of the sealing portion is in the range 5 to 50mm and the width of the attachment portion is in the range 10 to 50mm.

7. A sealing strip as claimed in Claims 5 and 6 in which the combined width of the sealing portion and the attachment portion, in the direction in which the attachment portion extends laterally from the sealing portion, is in the range 20mm to 90mm, and the thickness of the sealing portion is greater than the said thickness of the attachment portion.

8. A sealing strip as claimed in any preceding claim in which the attachment portion projects generally tangentially from a side of said sealing portion opposite said convex surface thereof.

9. A sealing strip as claimed in any preceding claim in which the attachment portion projects generally radially from a side of said sealing portion.

10. A sealing strip as claimed in any preceding claim in which the attachment portion is integrally formed with the sealing portion.

11. A sealing strip as claimed in any of Claims 1 to 9 in which said attachment portion comprises a flexible backing layer having opposite major surfaces with a layer of adhesive provided on one of said major surfaces of said flexible backing layer, part of said layer of adhesive adhering said flexible backing layer to a side of said sealing portion opposite said convex surface thereof.

12. A sealing strip as claimed in any of Claims 1 to 9 in which both the sealing portion and the attachment portion comprise elongate members with substantially circular or oval cross-sections, the two members being secured to each other side by side.

13. A sealing strip as claimed in any preceding claim provided with adhesive on two faces of the attachment portion.

AUSTRALIAN PATENT OFFICE 13

AMENDED SHEET

14 A sealing strip as claimed in any preceding claim in which said resiliently compressible material is a foam material

15. A sealing strip as claimed in Claim 14 when dependent upon claim 10 in which the sealing portion (5, 7) and the attachment portion (6, 8) are formed of a foam material and integrally formed with each other by an extrusion process

16. A sealing strip as claimed in any preceding claim having a length of several metres and provided in roll form.

17. A sealing strip heaving an elongate sealing portion (5, 7) formed of resiliently compressible material and an elongate attachment portion (6, 8) extending in a first direction laterally from the sealing portion (5, 7) with an adhesive surface (2, 4) being provided on an at least part of the attachment portion (6, 8) the sealing portion (5, 7) having a greater thickness in a direction substantially perpendicular to the said first direction than the attachment portion (6, 8) so as to provide a longitudinal hinge between the sealing portion (5, 7) and the attachment portion (6, 8).

18 A method of sealing a gap between a body (11, 13, 14) of a motor vehicle and an edge of a body panel that is movable between open and closed positions relative to the body (11, 13, 14) while at least portions of the motor vehicle are sprayed, which method uses a sealing strip provided in the form of an elongate sealing portion (5, 7) formed of resiliently compressible material and an elongate attachment portion (6, 8) which extends laterally from the sealing portion (5, 7) and which is provided with an adhesive surface (2, 4) for affixing the sealing strip to the body panel, the method including the steps of

moving the body panel (12, 13) to its open position.

AUSTRALIAN PATENT OFFICE

adhering the sealing strip by means of the adhesive surface (2, 4) along an edge of an inner surface of the body panel (12, 13) so the sealing portion (5, 7) projects beyond the edge of the body panel, and

moving the body panel (12, 13) to its closed position so that the sealing portion (5,7) seals the gap between the edge of the body panel (12, 13) and the body.

19. A method as claimed in Claim 18 in which the sealing portion (5, 7) of the strip has a convex surface along a first side thereof and is positioned within the gap so the convex surface faces in substantially the same direction as the adhesive surface (2, 4) on the attachment portion (6, 8)

20 A method as claimed in Claim 18 or 19 in which the combined width of the sealing portion (5, 7) and the attachment portion (6, 8) in the direction in which the attachment portion (6, 8) extends laterally from the sealing portion (5, 7), is in the range 20mm to 90mm.

21. A method as claimed in any of Claims 18, 19 or 20 in which the sealing portion (5, 7) has a greater thickness than the attachment portion (6, 8) in a direction substantially perpendicular to the direction in which the attachment portion (6, 8) extends laterally from the sealing portion (5, 7)

22 A method as claimed in any of Claims 18-21 in which the attachment portion (6, 8) is bendable longitudinally adjacent to the sealing portion (5, 7)

23. A method as claimed in any of Claims 18-22 in which the sealing portion (5, 7) of the strip has sufficient resilience to conform to the shape of the gap.

24. A method as claimed in any of Claims 18-23 in which the attachment portion (6,8) is integrally formed with the sealing portion (5, 7)

AUSTRALIAN PATENT OFFICE

25. A method as claimed in any of Claims 18-24 in which the gap is along the B-post of the vehicle body and the body panel (12, 13) is a vehicle door

26. A method of sealing a gap between adjacent surfaces of first and second components (20, 21) of a structure to be sprayed, which method uses a sealing strip provided in the form of an elongate sealing portion (5, 7) formed of resiliently compressible material and an elongate attachment portion (6, 8) extending laterally from the sealing portion (5, 7), the sealing portion (5, 7) having a cross-section with a convex surface along a first side thereof and the attachment portion (6, 8) having an adhesive surface (2, 4) facing in substantially the same direction as said convex surface of the sealing portion (5, 7), the method including the steps of:

adhering the adhesive surface (2, 4) of the attachment portion (5,7) of the sealing strip to a surface of the first component (20) with the sealing portion (5, 7) projecting therefrom, and

longitudinally bending the attachment portion (6, 8) adjacent the sealing portion (5, 7) and pushing the sealing portion (5, 7) into the gap so that the sealing portion (5, 7) seals the gap between the first and second components (20, 21).

27. A method of masking a first portion of a surface from a second portion of the surface that is to be sprayed, which method uses a sealing strip as claimed in any of the Claims 1 to 16 and includes the step of adhering the adhesive surface (2, 4) of the attachment portion (6, 8) of the sealing strip to the first surface with the convex surface of the sealing portion (5, 7) along the boundary between the first and second portions of the surface so that the convex surface will form an indefinite edge of the sprayed material between the first and second portions of the surface.

AUSTRALIAN PATENT OFFICE

28 A method of sealing a gap using a sealing strip as claimed in any of Claims 1 to 17

29 A sealing strip substantially as hereinbefore described with reference to the accompanying drawings

30 A method of sealing a gap substantially as hereinbefore described with reference to the accompanying drawings

Dated this 6th day of July 1998

PATENT ATTORNEY SERVICES

Attorneys for

SPEEDARRIVE PROJECTS LTD

AUSTRALIAN PATENT OFFICE

PCT/GB95/00304
16679/95

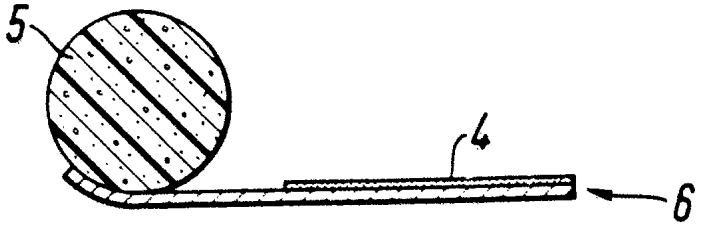

Fig. 1

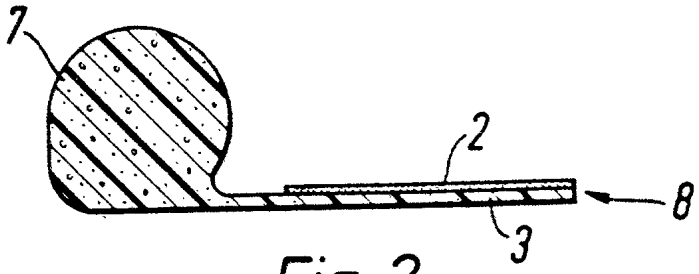

Fig. 2

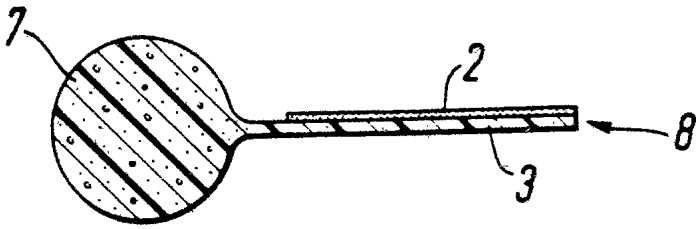

Fig. 3

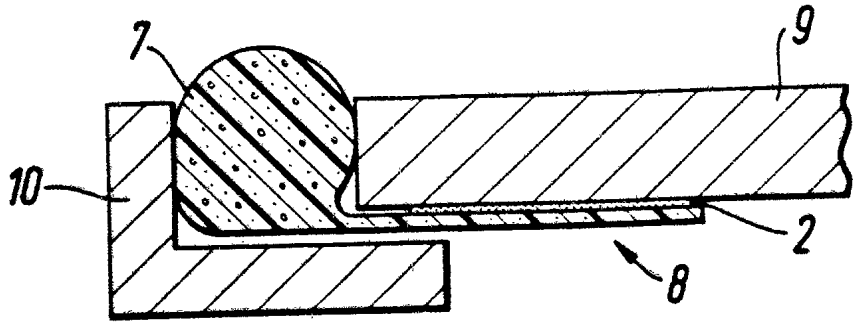

Fig. 4

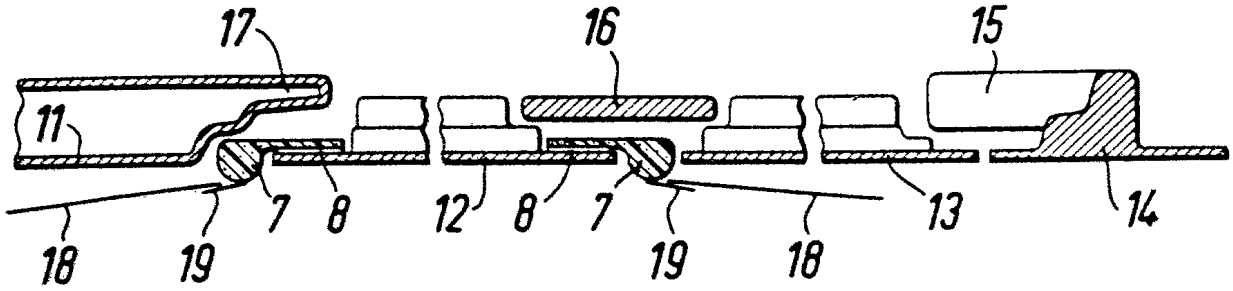

Fig. 5

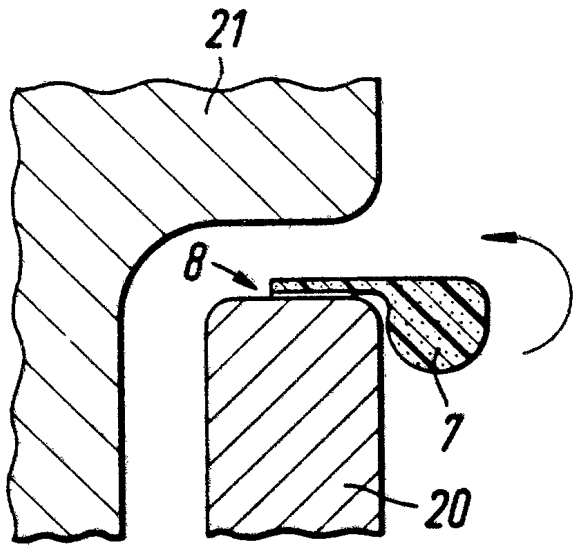

Fig. 6A

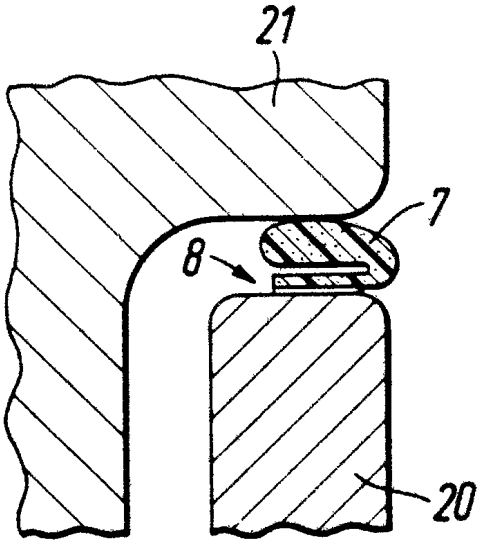

Fig. 6B

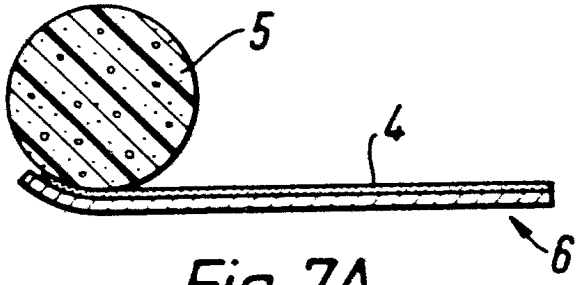

Fig. 7A

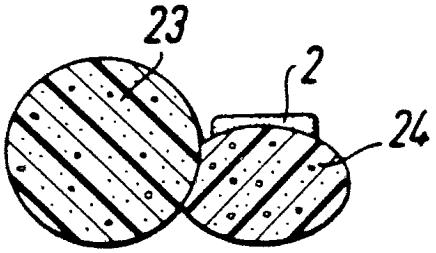

Fig. 7E

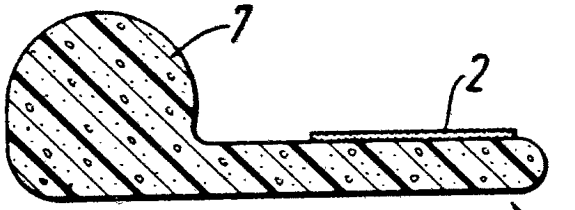

Fig. 7B

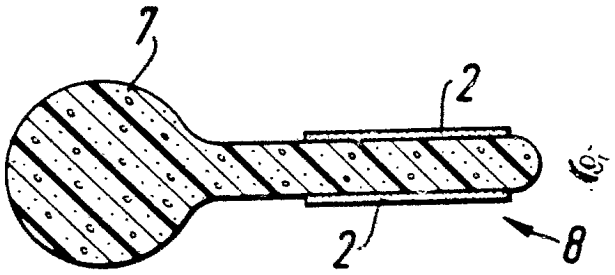

Fig. 7F

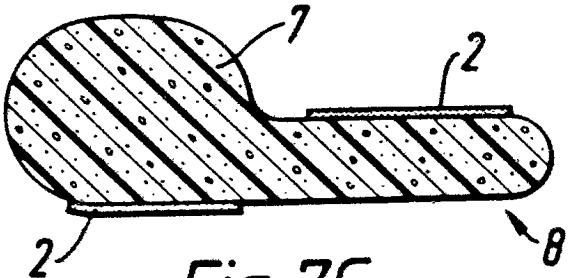

Fig. 7C

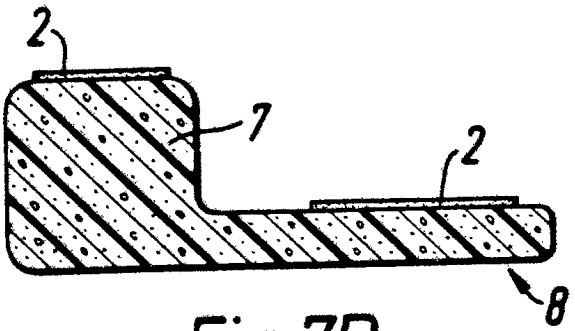

Fig. 7D

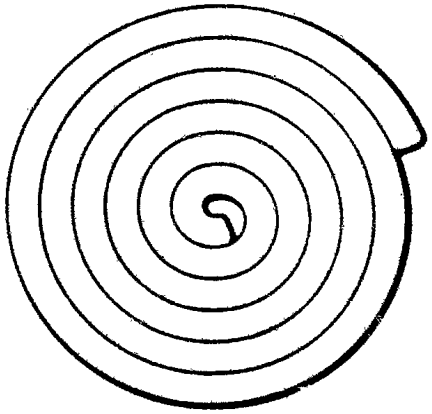

Fig. 8

INTERNATIONAL SEARCH REPORT

Inter ial Application No
PCT/GB 95/00304

A. CLASSIFICATION OF SUBJECT MATTER
IPC 6 B05B15/04

According to International Patent Classification (IPC) or to both national classification and IPC

B. FIELDS SEARCHED

Minimum documentation searched (classification system followed by classification symbols)
IPC 6 B05B

Documentation searched other than minimum documentation to the extent that such documents are included in the fields searched

Electronic data base consulted during the international search (name of data base and, where practical, search terms used)

C. DOCUMENTS CONSIDERED TO BE RELEVANT

Category *	Citation of document, with indication, where appropriate, of the relevant passages	Relevant to claim No.
X	WO,A,90 15668 (OLSSON) 27 December 1990 see page 5, line 27 - page 6, line 6; figures 10,11	1,9,15, 18-20, 22-25
A	DE,A,41 06 960 (RIBIC) 10 September 1992 see the whole document	1,19
A	GB,A,2 223 425 (WESTERN) 11 April 1990 see the whole document	1,19

☐ Further documents are listed in the continuation of box C.

☒ Patent family members are listed in annex

* Special categories of cited documents :

"A" document defining the general state of the art which is not considered to be of particular relevance

"E" earlier document but published on or after the international filing date

"L" document which may throw doubts on priority claim(s) or which is cited to establish the publication date of another citation or other special reason (as specified)

"O" document referring to an oral disclosure, use, exhibition or other means

"P" document published prior to the international filing date but later than the priority date claimed

"T" later document published after the international filing date or priority date and not in conflict with the application but cited to understand the principle or theory underlying the invention

"X" document of particular relevance; the claimed invention cannot be considered novel or cannot be considered to involve an inventive step when the document is taken alone

"Y" document of particular relevance; the claimed invention cannot be considered to involve an inventive step when the document is combined with one or more other such documents, such combination being obvious to a person skilled in the art.

"&" document member of the same patent family

Date of the actual completion of the international search	Date of mailing of the international search report
3 May 1995	17.05.95

Name and mailing address of the ISA	Authorized officer
European Patent Office, P.B. 5818 Patentlaan 2 NL - 2280 HV Rijswijk Tel. (+31-70) 340-2040, Tx. 31 651 epo nl, Fax (+31-70) 340-3016	Juguet, J

INTERNATIONAL SEARCH REPORT

Inter ial Application No
PCT/GB 95/00304

Patent document cited in search report	Puo auon date	Patent family member(s)		Publication date
WO-A-9015668	27-12-90	SE-B-	463656	07-01-91
		AU-A-	5846690	08-01-91
		SE-A-	8902153	16-12-90
DE-A-4106960	10-09-92	NONE		
GB-A-2223425	11-04-90	NONE		