(No Model.) 2 Sheets—Sheet 1.

A. HENDRICH.

WOOD TURNING LATHE.

No. 590,222. Patented Sept. 21, 1897.

Fig. 1.

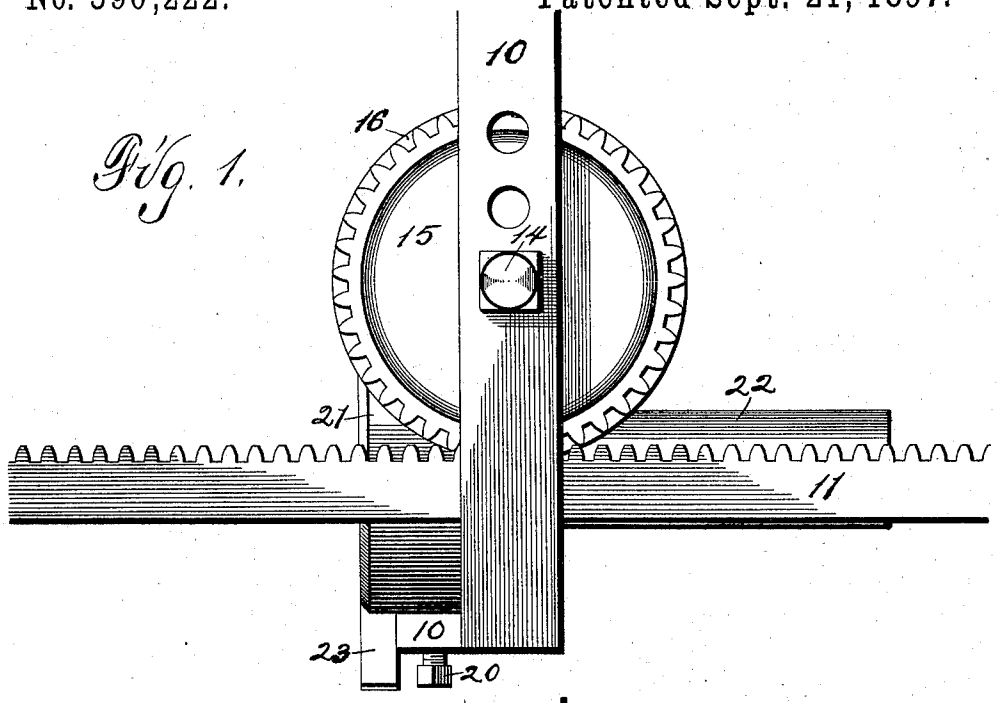

Fig. 2.

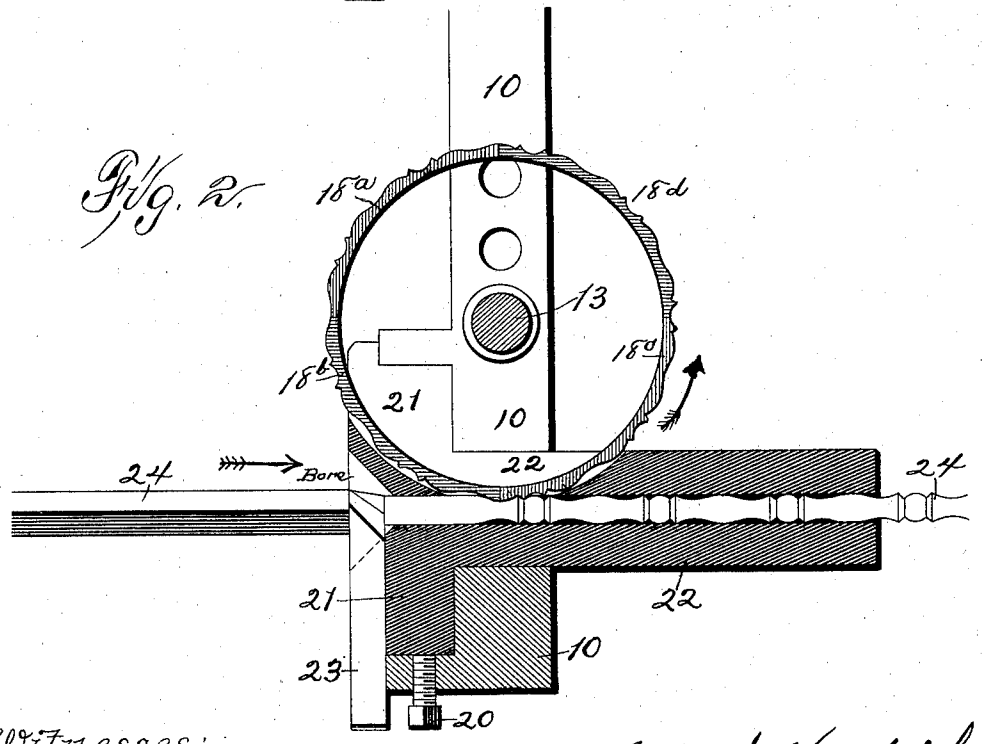

Witnesses:
W. J. Tankey.
R. G. Orwig

August Hendrich,
By J. C. Sweet
Att'y.

THE NOBRIS PETERS CO., PHOTO-LITHO., WASHINGTON, D. C.

(No Model.) 2 Sheets—Sheet 2.

A. HENDRICH.

WOOD TURNING LATHE.

No. 590,222. Patented Sept. 21, 1897.

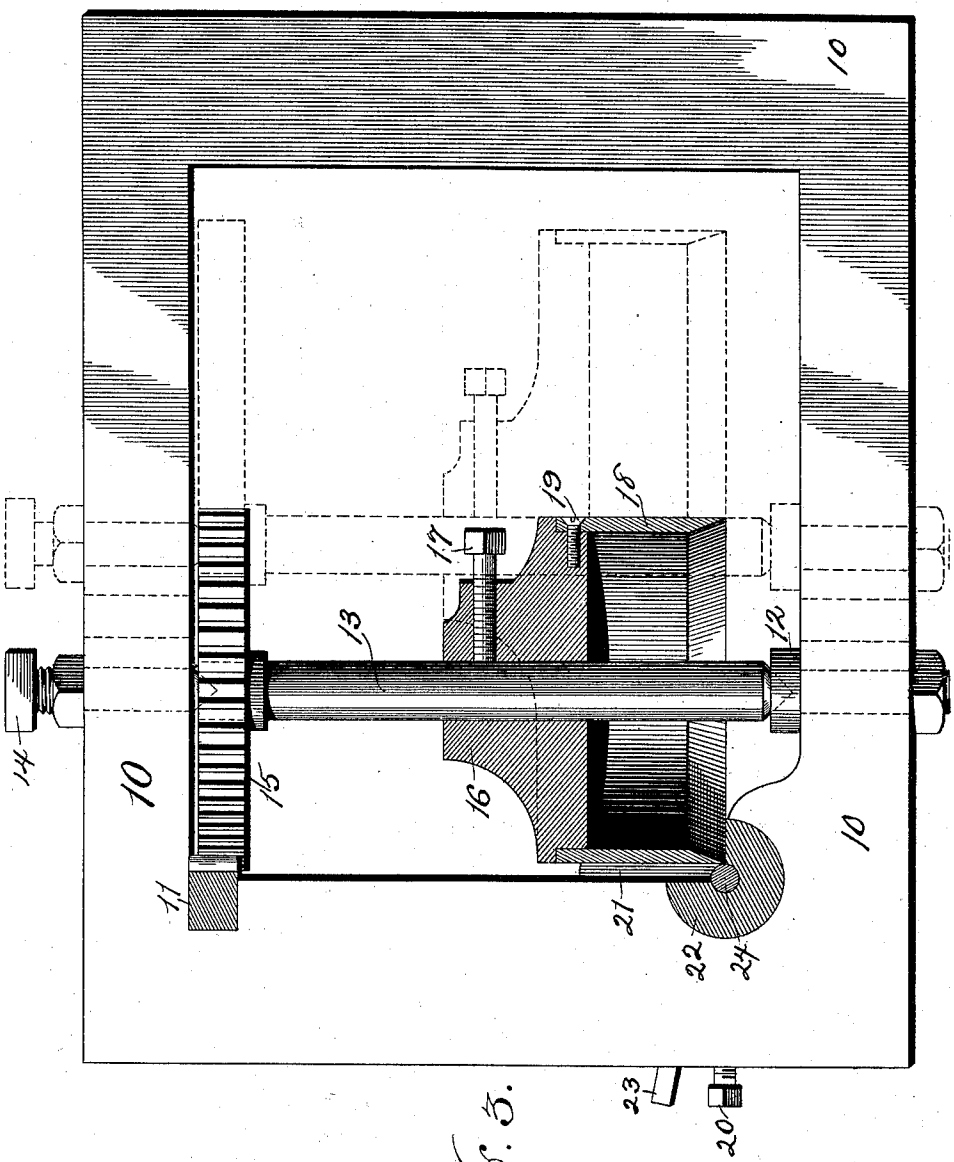

Fig. 3.

Attest:
W. J. Sankey.
R. G. Orwig

August Hendrich,
per J. C. Sweet
Attorney.

THE NORRIS PETERS CO., PHOTO-LITHO., WASHINGTON, D. C.

UNITED STATES PATENT OFFICE.

AUGUST HENDRICH, OF CEDAR FALLS, IOWA, ASSIGNOR TO HIMSELF, JOHN W. PHILPOT, AND JEFFREY G. PACKARD, OF SAME PLACE.

WOOD-TURNING LATHE.

SPECIFICATION forming part of Letters Patent No. 590,222, dated September 21, 1897.

Application filed November 30, 1896. Serial No. 613,956. (No model.)

To all whom it may concern:

Be it known that I, AUGUST HENDRICH, a citizen of the United States of America, and a resident of Cedar Falls, in the county of Black Hawk and State of Iowa, have invented a new and useful Improvement in Wood-Turning Lathes, of which the following is a specification.

The object of this invention is to provide improved means for turning small or slender objects.

A further object of this invention is to provide improved means for retaining a slender object and holding the same against the resistance offered by a cutting-knife, and this application should be read in conjunction with another application for Letters Patent of the United States executed concurrently herewith, which shows part of the elements delineated herein.

My invention consists in the construction, arrangement, and combination of elements hereinafter set forth, pointed out in my claims, and illustrated by the accompanying drawings, in which—

Figure 1 is a plan illustrating the novel portions of my machine. Fig. 2 is a sectional plan of the device shown in Fig. 1 in combination with a stick of material being operated upon. Fig. 3 is an elevation, partly in section, of my device.

In the construction of the machine, or rather the portions of it illustrated in the drawings and by me claimed as my invention, the numeral 10 designates a head arranged to travel longitudinally of a rack 11. The head 10 may be mounted for travel by machine or hand power on the bed-plate of any lathe of common construction, and since lathes carrying traveling heads are old and well known in this art I have not deemed it advisable to illustrate the same. The rack 11 is stationary, or, in other words, is to be mounted rigidly upon the stationary portion, table, or base of the lathe. Seats are formed in the upper and lower portions of the head 10, as illustrated in Figs. 1 and 2 and by dotted lines in Fig. 3, and pairs of said seats, the members of which aline with each other, are employed successfully, as hereinafter described.

Mounted in one of the seats in the lower portion of the head 10 is a step 12, and said step may be mounted in either of the other seats in said portion of the head 10, if desired. A shaft 13 is stepped in a vertical plane in the step 12 and has a centering-pin 14 stepped in its upper end in the axial plane of the step 12, which centering-pin is seated in the aperture or seat of the upper portion of the head 10, alining with the seat occupied by the step 12 in the lower portion of said head. A pinion 15 is mounted upon the upper end portion of the shaft 13 and meshes with the toothed face of the rack 11. A knife-head or hub 16 is mounted on the central portion of the shaft 13 and is held thereon by means of a set-screw 17, traversing said hub and impinging against the periphery of the said shaft. The lower portion of the knife-head or hub 16 is recessed annularly, and mounted in the recess thus formed is an annular cutter or knife 18, which knife is formed in four sections, as shown in Fig. 2 and indicated by the symbols 18^a, 18^b, 18^c, and 18^d. Each of the sections of the knife 18 is fixed to the knife-head or hub 16 by screws 19. The lower margin of the cutter or knife 18 is formed as a cutting edge beveled inwardly and made sinuous, as illustrated in Fig. 2.

Mounted in the lower portion of the head 10 and secured therein by means of a set-screw 20 is a retaining-head 21, and a retaining, backing, and guiding tube 22 is formed on and extended axially from the said retaining-head. The head 21 and tube 22 are axially and coincidently bored, and the said head carries a roughing-knife 23. A portion of the head 21 and tube 22 is cut away, as illustrated by the unshaded portion thereof within and adjacent to the annular knife in Fig. 2, and the said members are so mounted relative to the annular knife as that the orbit of the cutting edge of said knife intersects the bore in said head and tube.

In practical use the head 10, carrying the cutting mechanism and connected members is mounted for travel on a lathe-table. A stick or section of wood 24 to be operated upon is mounted in a lathe-chuck (not shown) and rotated at a high rate of speed. The head 10 is advanced toward one end of the stick 24

until said end of said stick enters the bore of the retaining-head 21, which is formed with a bell-shaped mouth to receive it. The end of the stick is turned down to enter the bore by the roughing-knife 23, and in the further advancement of the head 10 and members carried thereby the said stick is fed through the bore of the head 21 and tube 22. As the stick 24 is fed through the head 21 and into the bore of the tube 22 it contacts with the cutter 18, which cutter is rotating by reason of the meshing engagement of the pinion 15 with the rack 11. Because of the stationary positioning of the rack 11 and the traveling arrangement of the axis of the pinion 15, when the said pinion meshes with the said rack it will be rotated thereby.

It will be observed that the cutter 18 rotates slowly relative to the rotation of the stick 24, and therefore when the said stick contacts with the said cutter it will be turned down and into a form circular in cross-section, and owing to the slower rotation of the cutter and the sinuosity of the cutting edge the stick 24 when turned will present a sinuous profile.

By causing the stick 24 to be fed against the tangent of the cutter 18 I provide that the edge of said cutter will make a shear cut on said stick, as it is very desirable in the turning of wooden substances.

By forming the cutter 18 in sections I am enabled to construct them absolutely indentical in form, shape, appearance, strength, and temper and grind or repair the same with great convenience, whereas were I to form the cutter of a single piece having a sinuous edge it would be almost impossible to temper the same uniformly throughout and still maintain the annular formation, for the reason that in tempering the metal is inclined to warp and shrink unevenly.

It sometimes occurs that it is desirable to employ a knife or cutter of larger circumference in order that a greater distance in the length of the stick of material to be acted upon may be turned in a given travel of the head 10, and in such an event I would employ a larger knife and a pinion 15 coincident in diameter therewith and step the shaft 13 in one or the other of the other seats, as illustrated by dotted lines in Fig. 3.

I claim as my invention—

1. In a machine of the class described a traveling head comprising an annular rigid frame 10, which frame is provided with two or more pairs of alining seats or journal-bearings in its upper and lower bars, a shaft 13 arranged in one or another of the pairs of alining seats, a cutter mounted on said shaft and means for rotating said shaft.

2. In a machine of the class described a fixed rack, a rigid annular frame or head 10 provided with a bearing opening to its interior to receive and slidingly engage said rack, the teeth of the rack facing to the interior of the frame, a head 21 mounted rigidly in said frame 10, a tube 22 rigidly connected with the head 21 and extended to the rear of the frame 10, which head and tube are axially bored to receive a revolving stick to be operated upon, a roughing-knife 23 mounted at the initial end of the bore of the head to reduce the stick before its entrance thereto, a plurality of seats in the top bar of the frame 10, a plurality of seats in the bottom bar of the frame 10 the axes of the latter seats alining with the axes of the former seats, a shaft 13 mounted for rotation in one or the other of the upper seats in the frame, a step 12 mounted in one or the other of the lower seats of the frame and provided with a concave upper end to receive a convex lower end of the shaft 13 for rotation therein, a gear 15 rigidly connected with the shaft 13 and meshing with the rack 11, a hub 16 adjustably mounted upon the shaft 13 and shoulders in its periphery, an annular cutter 18 diametrically divided and mounted on the hub 16 beneath the shoulders thereof, the lower margin of the cutter 18 forming a continuous cutting edge extended to and intersecting the bore of the head 21 and tube 22.

AUGUST HENDRICH.

Witnesses:
J. W. PHILPOT,
J. G. PACKARD.